SERVICE MANUAL

NAGRA-D/DII

20 01002 253

AUDIO
TECHNOLOGY
SWITZERLAND

CHAPTER I INTRODUCTION

CHAPTER II MECHANICAL SECTION

CHAPTER III CALIBRATION

CHAPTER IV TIME CODE

CHAPTER V TECHNICAL INFORMATIONS

CHAPTER VI ACCESSORIES

CHAPTER VII SCHEMATICS

CHAPTER VIII

CHAPTER I

1.0 INTRODUCTION
1.0.1 Page numbering

1.1 IMPORTANT NOTES
1.1.1 Electrostatic discharge
1.1.2 Tape care / handling
1.1.3 Output connection to a mixer

1.2 NAGRA-D FORMAT
1.2.1 Definitions
1.2.2 Error code format
1.2.3 Track format
1.2.4 Sector format

1.0 INTRODUCTION

The concept of the NAGRA-D was to build a truly professional format that is reliable, will last for many years and lends itself well to archiving. The arguments regarding the format, choice of tape etc. are not covered here.

The NAGRA-D is a four channel digital audio recorder having 24 bits per sample recording on 6.35mm metal oxide tape, on either 5" or 7" reels, of the tape type as used by the DASH or PRODIGI formats. It accommodates the sampling frequencies of 32 kHz, 44.1 kHz and 48 kHz rendering it suitable for all types of professional recording applications. The NAGRA-D is transparent to the AES bus giving connection possibilities to a wide range of external digital equipment.

The sound on the NAGRA-D is recorded on helical track, by means of a rotary head (scanner) containing 4 separate VHS heads (2 for recording and 2 for playback), allowing read after write (off tape monitoring) which can be heard through the two, level adjustable, headphone outputs. The recorded tracks have a width of 70 μm and a pitch of 80.7μm. At the longitudinal tape speed of 99.25 mm/s, the scanner makes 62.5 revolutions per second (3750 r.p.m.) for a sampling frequency of 48 kHz.

Three longitudinal tracks (Control, Cue and Time code) are also recorded on the tape. The control track is used to synchronize the tape transport during playback. The CUE track can record a mix of the four digital inputs, for search features, or alternatively it can record an external cue microphone for commentary applications. This track can be monitored at high speed, in either direction, allowing rapid sequence location audibly. (Please refer to the instruction manual for the "footprint" of the format). The third longitudinal track is the SMPTE/EBU time code track. The specifications of the format can be seen at the beginning of chapter IV "Time code"

The format of the NAGRA-D allows 4.608 x 10^6 bits per second to be recorded, meaning that on a 5" reel of tape 16.03 x 10^9 bits (16 giga bits). The combination of selected tape speed and number of channels to be recorded gives tape durations to satisfy almost all applications.

Apart from the two AES digital inputs, four analog inputs are available for either line or microphone input sources. When in microphone operation each of the four inputs is switchable between "T" powering, +12V phantom and +48V phantom. The signal levels are adjusted using the input potentiometers, and the levels are indicated on the four microprocessor controlled meters. Microprocessor control of the entire machine gives almost limitless possibilities, not only as far as the digital recording is concerned, but also for external control, editing, fault diagnosis etc.

NOTE: The NAGRA-D has no user selections / switches inside all mode selections etc. are made via an external PC or by the MENU mode.

1.0.1 PAGE NUMBERING

The page numbering in this manual is done in such a way so that update or replacement pages may be added at any time. Each page number starts with the number of the chapter (in Roman numerals) followed by the page number.

EXAMPLE III·4 This indicates Chapter III page 4

If a page were to be added after this page but before page 5 then the number on the additional page would be III 4.1

Each page is also marked with the date in the bottom left corner. If a new page is received then the page with the old date should be discarded. Update pages for this manual will be sent out according to the return of the service manual registration form at the beginning of this manual.

1.1 IMPORTANT NOTES

1.1.1 ELECTROSTATIC DISCHARGE

The Nagra-D's electronic circuits are all SMD devices using CMOS and MECL technology, which renders them very susceptible to electrostatic discharge. These circuits are fully protected while installed in the machine, however if any of the circuits are to be disconnected and/or removed from the machine then the operator must at all times be connected to ground via a wrist bracelet and the circuits must only be placed on a conductive mat also connected to ground. The circuits are printed with the international sign indicating the danger.

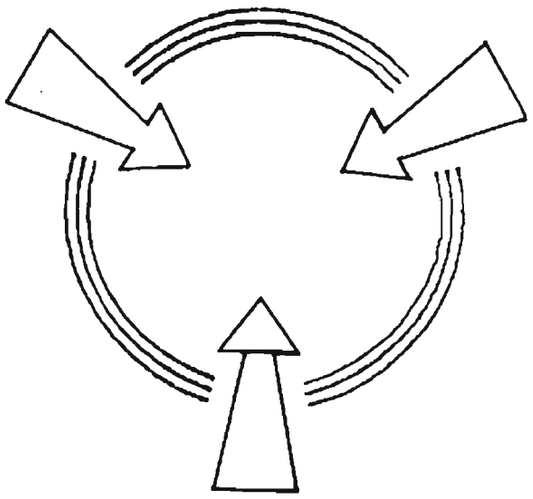

1.1.2 TAPE CARE / HANDLING

Although scissor editing is technically possible on the NAGRA-D, it is not recommended to touch the tape unless absolutely necessary. Cotton gloves are recommended for this, in order to prevent moisture (finger prints) from the skin affecting the tape.
Due to the fact that the tape of the NAGRA-D is not protected by a cassette, it is recommended to spool tapes at a slower than maximum speed for storage purposes (see instruction manual "MENU's"). If the tape is rewound at high speed, the trapped air during rewind causes the tape to wind unevenly on the reel, meaning that the edges of the tape stand proud. If the plastic reel is now handled, there is a risk of physically damaging the edges of the tape. On the lower edge of the tape in the format of the NAGRA-D are the time code and Control track (see "footprint" in the instruction manual) which will cause problems for playing back the tape if the edges of the tape are damaged.

1.1.3 OUTPUT CONNECTIONS TO A MIXER

The NAGRA-D does not have transformers on its audio outputs. This means that if the outputs are to be connected to the inputs of a mixing console so that the four channels can be mixed down to two, then be sure that the inputs to the mixer are set to the line position. If they are set to the Phantom +48 position for example then the output OP-Amps of the NAGRA-D may be damaged.

1.2 THE NAGRA-D FORMAT

1.2.1 DEFINITIONS

Scanner rotational frequency	: FS / 768
1 rotation of the scanner	= REC1 + PLAY1 + REC2 + PLAY2
Wrap angle 88°	

1.2.2 ERROR CODE FORMAT:

Type of coding:	Reed-Solomon on a Gallois field 256 (8 bit words), interlaced coding Inner C1(38,34,5) and outer C2(12,9,4)
Sample size:	24 bits
N° of samples in an ECC block	9 x 11 = 99
N° of audio samples / rotation	768 x 4= 3072
N° of ECC blocks / rotation	3072/99= 31.03 (=32 blocks)
N° of ECC blocks / track	32/2=16
N° of ID samples / track	16 x 99 - 1536 = 48
N° of ID samples per block	48/16=3

11 samples of 24 bits (data or ID)
33 columns of C2 coding

CNT 1	DATA	DATA	DATA	-----	DATA	DATA	DATA	DATA	ECC1	ECC1	ECC1	ECC1
CNT 2	DATA	DATA	DATA	-----	DATA	DATA	DATA	DATA	ECC1	ECC1	ECC1	ECC1
CNT 3	DATA	DATA	DATA	-----	DATA	DATA	DATA	DATA	ECC1	ECC1	ECC1	ECC1
CNT 4	DATA	DATA	DATA	-----	DATA	DATA	DATA	DATA	ECC1	ECC1	ECC1	ECC1
CNT 5	DATA	DATA	DATA	-----	DATA	DATA	DATA	DATA	ECC1	ECC1	ECC1	ECC1
CNT 6	DATA	DATA	DATA	-----	DATA	DATA	DATA	DATA	ECC1	ECC1	ECC1	ECC1
CNT 7	DATA	DATA	DATA	-----	DATA	ID	ID	ID	ECC1	ECC1	ECC1	ECC1
CNT 8	DATA	DATA	DATA	-----	DATA	ID	ID	ID	ECC1	ECC1	ECC1	ECC1
CNT 9	DATA	DATA	DATA	-----	DATA	ID	ID	ID	ECC1	ECC1	ECC1	ECC1
CNT 10	ECC2	ECC2	ECC2	-----	ECC2	ECC2	ECC2	ECC2	ECC1	ECC1	ECC1	ECC1
CNT 11	ECC2	ECC2	ECC2	-----	ECC2	ECC2	ECC2	ECC2	ECC1	ECC1	ECC1	ECC1
CNT 12	ECC2	ECC2	ECC2		ECC2	ECC2	ECC2	ECC2	ECC1	ECC1	ECC1	ECC1

1.2.3 TRACK FORMAT

1	2 : 192 Sectors	3

1 = Preamble (for mechanical stability and pll start up) = 128 symbols
2 = Sectors
3 = Postamble (for mechanical stability)

1.2.4 SECTOR FORMAT:

1	2	4	ECC 1

1 = Sync 8/9	4 Symbols
2 = CNT (Counter)	1 Symbol
3 = One line of ECC block	37 Symbols = 33 data + 4 ECC Inner

Size of 1 symbol = 8 bits for the DSP 9 bits on the tape.

Length of a sector	42 symbols
Number of sectors per track	16 x 12 = 192
Number of data bits per track	192 x 42 x 9 = 72576

Total bits without sectors	2 x 128 x 9 = 2304 bits
Total number of bits per track	72576 + 2304 = 74880 bits

Minimum bit rate = (FS/768) x (360/88) x 74880 Fs x 398.9

The bit rate must be a multiple of the sampling frequency:

Bit rate	Fs x 400	= 19.2 Mbits/sec for Fs 48 kHz
		= 17.64 Mbits/sec for Fs 44.1 kHz
		= 12.8 Mbits/sec for Fs 32 kHz

Number of bits per track = 400 x 768/(360/88) = 75093 bits.

Fuses inside the NAGRA-D

Inside the NAGRA-D there are five important fuses, the location and type of which needs to be explained for easier diagnostics.

Open the top deck of the machine by loosening the two deck fastening screws on the front of the deck plate.
On the power input and protection circuit A 15 located at the back of the machine mounted vertically behind the internal battery there are two fuses, F1 and F2. Both of these fuses are wire ended soldered fuses located on the right-hand side of the circuit. F1 is a 5A fuse and is connected in series with the internal battery. F2 is a 5A fuse and is connected between the external power socket and the power circuits of the machine. (on early machines this was a 3A fuse but should be replaced by a 5A)

Remove the bottom of the machine by removing the six screws that hold the lower plate on. On the power converter circuit A23 which runs the full width of the rear of the machine there are three more wire ended fuses, F1, 2 and 3.

F1 is a 5A and protects the +5V logic supply for the entire machine.

F2 is a 2A fuse and protects the power supply to the loading motor circuitry only.

F3 is a 0.5A fuse and protects the unregulated supply which among other things supplies all the meter lamps/leds and the all the indication leds.

If the machine is fitted with the ND-AP auto powering option then there is an additionnal fuse located on the ND-AP circuit board.

CHAPTER II
MECHANICAL SECTION

DIS-ASSEMBLY AND RE-ASSEMBLY

1.0 Removing the plexi glass cover.

1.1 Removing the dust cover.
1.1.2 Removing the outer tape roller.
1.1.3 Removing the tension rollers.
1.1.4 Removing the rotary tape guide.
1.1.5 Removing the scanner entry and exit guides.
1.1.6 Removing the pinchroller.
1.1.7 Removing the reel-holders.

1.2 Removing the longitudinal headblock.

1.3 Removing the pinchwheel and guide carriage.

1.4 Removing the reel motors.
1.4.1 Re-fitting the reel motors.

1.5 Removing the parking brake arms.
1.5.1 Re-fitting the parking brake arms.

1.6 Removing the complete scanner.
1.6.1 Removing the scanner rotor.
1.6.2 Re-assembly of the scanner.

1.7 Removing the capstan motor.
1.7.1 Re-fitting the capstan motor.

1.8 Removing the cam motor.
1.8.1 Re-fitting the cam motor.

1.9 Tension arms.
1.9.1 Re-mounting the tension arms.

2.0 Replacing the pinchwheel and guide carriage

2.1 Tape path height alignment

2.2 Mechanical spare parts list
2.3 List of special tools

BE SURE TO READ EACH PROCEDURE THOROUGHLY BEFORE COMMENCING

A list of mechanical parts can be found at the end of this chapter. The list contains all the parts mentioned in the text and is split up into sections according to the part of the machine being worked on. Some of the parts are sub-assemblies and must be replaced as a complete item. When ordering parts be sure to use the full ten digit number as well as the description so as to avoid any confusion.

1.0 REMOVING THE PLEXI-GLASS COVER

Before attempting any work on the mechanics of the NAGRA-D the plexi-glass cover should be removed. This is firstly to allow easier access, and secondly to protect it from getting scratched. Open the cover and hold it vertically, hold the two corners nearest to the hinges, and move the cover about 4mm to the left and it will come away from the machine.

If the NAGRA-D is fitted with the ND-SET 7" reels cover, then this must be removed as the deck plate of the machine cannot be lifted with this option fitted.

1.1 REMOVING THE DECK PLATE DUST COVER

In order to have access to the mechanics of the NAGRA-D it is necessary to remove the deck plate dust cover, which is on the top of the machine and is held in place by 5 screws. This need not be removed unless access to the following parts is needed:

Pinchwheel and guide carriage assembly
Tension arm supports or their differential transformers
Cam motor and drive mechanism and its differential transformer
Reel motor parking brakes.

If access to any of the above is needed then proceed through the rest of section 1 of this chapter in the order that it is written which will cover all the steps necessary before the dust cover can be removed.

1.1.1 REMOVING THE OUTER TAPE ROLLER

To remove the deck plate dust cover of the machine, it is necessary to remove several mechanical parts. Using a small jewelers screwdriver, as shown in Figure 1, unscrew the top cap of the rotary tape guide (located directly behind the supply tension roller), and be sure not to loose the small Mylar washer located under the cap, as well as the height adjustment washer(s) located under the roller itself (if fitted).

1.1.2 REMOVING THE TENSION ROLLERS

Before removing the tension rollers, put a small pencil mark on the deck plate indicating their position while in PLAYBACK. Next slightly loosen the screw in the bottom of each tension roller (max ¼ of a turn) and remove the roller. The fixation screws are also indicated in figure 1 below.

Note: On machines up to serial number 1000520 the left tension roller is slightly thinner than the right one (approx. 19/100mm). The thinner one is recognized by a single groove around the top of the roller. On machines carrying serial numbers greater than 1000520 both rollers are of the new thinner type. It is important not to mix up the two types as the counter roller will not count correctly if the two rollers are swapped over.

Outer tape guide roller fixing screw —

Left tension roller fixing screw ———

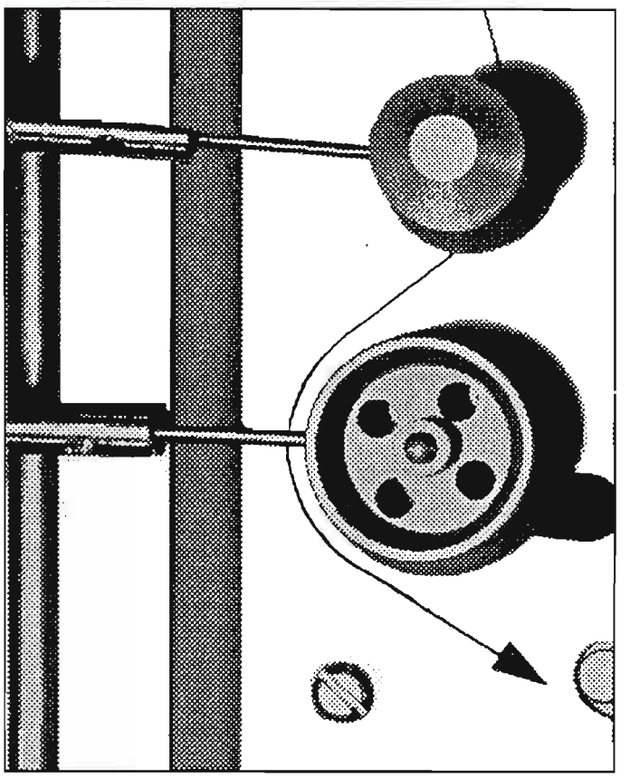

Figure 1: Showing where to unscrew the outer tape roller guide and left tension roller. The right tension roller pulley is removed in the same manner.

1.1.3 REMOVING THE ROTARY TAPE GUIDE (beside the longitudinal headblock)

It is now necessary to remove the rotary guide located immediately to the right of the longitudinal headblock. DO NOT move the positioning screw located in the right-hand side of the guide, as this adjusts the mechanical position of the control track (covered in the electrical calibration section of this manual), or the small screw in the front lower edge of the guide (painted red) as this will affect the wrap of the tape on the scanner (this is factory calibrated and should NEVER be touched). Simply remove the main central rear screw holding the guide to the deck plate, using a screwdriver, taking care not to loose its washer.

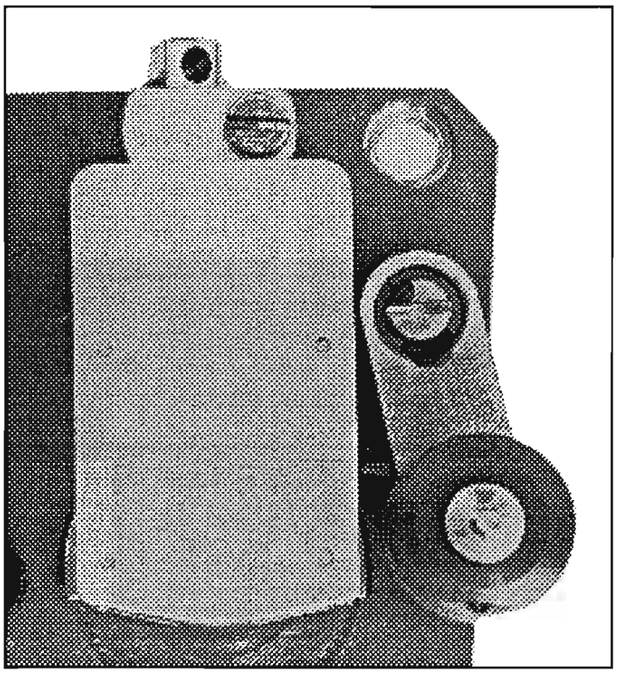

Figure 2: Rotary outer tape guide, showing the rear fixing screw.

1.1.4 REMOVING THE SCANNER ENTRY AND EXIT GUIDES

The entry and exit guides to the scanner are very critical parts of the transport, and should be treated carefully. Any mechanical damage to these parts will mean that the machine cannot be re-aligned correctly. These two guides must be removed before the deck plate cover can be removed. This is done by inserting a special driver into the black cut-away screw in the top of the guide to be removed. Unscrew the guide, using the special tool number 01 90901 089 (the whole guide will turn). Carefully remove the guide along with its support mounting.

NOTE: The coloured scanner guide is the entry guide and sits on the left of the scannner.
In the drawing below the guide screw is indicated with a normal screwdriver, however the special tool mentioned above must be used for removing, replacing and adjusting of these guides.

Do not touch the small screw that is painted red in the front of these guides as this is used for the alignment - covered later under ELECTRICAL CALIBRATION, and ensure that when refitting the guides that the red screw is in front as before.

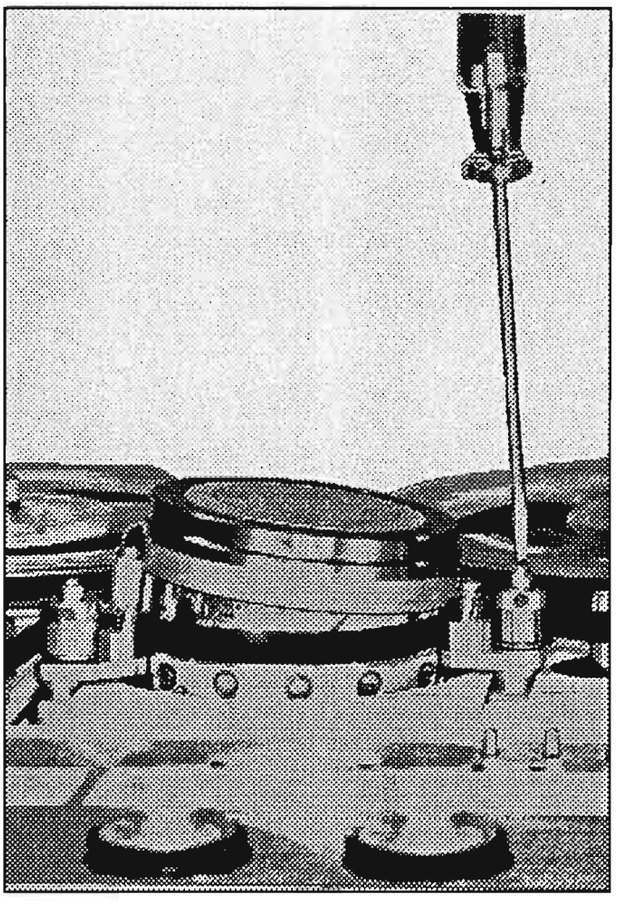

Figure 3: Unscrewing the scanner exit guide.

1.1.5 REMOVING THE PINCHROLLER

The pinchroller assembly must also be removed, before the cover can come off. To do this proceed as follows:

Insert a screwdriver as shown in the diagram below and loosen the fixing screw about a quarter of a turn. Insert a flat screwdriver (acting as a lever) on the front edge slightly to the right of the main securing screw and use this as a lever to slightly open the support to release the pressure, and lift the pinchroller assembly vertically, making sure not to loose the nylon spacer. Be careful not to loose the pinchroller assembly pressure spring, as the assembly may come apart once it has been removed from the deck.

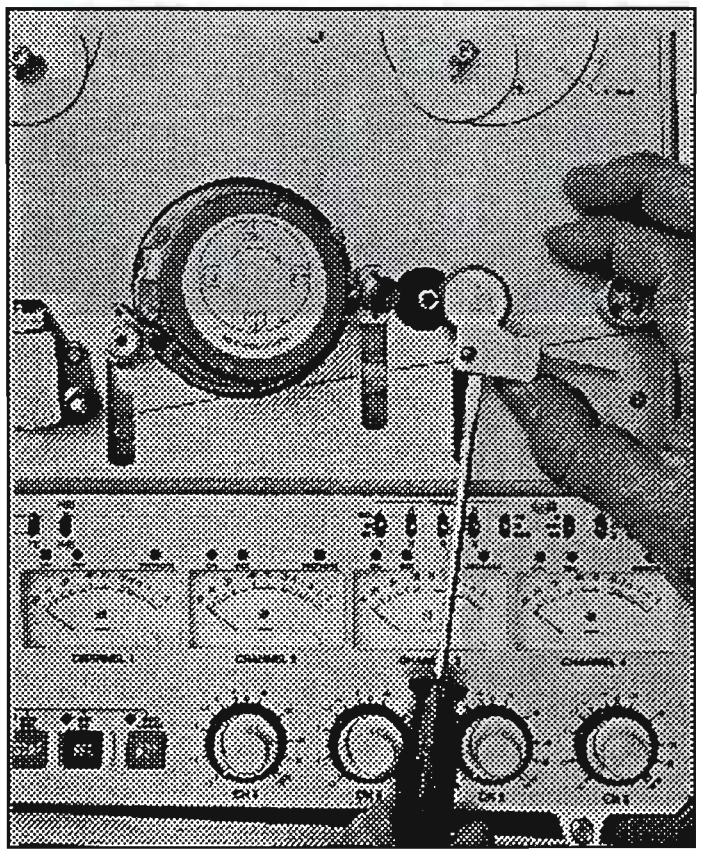

Figure 4: Indication of the pinchroller assembly with the screwdriver.

NOTE: This screw replaces the Allen screw that was fitted to the earlier machines.

1.1.6 REMOVING THE REEL MOTOR SPOOL HOLDERS

In order that the reel motor dust covers do not inhibit the removal of the deck plate cover remove each of them by removing the central Allen screw (2.5mm driver) and lifting the whole reel holder clear. Remove the dust cover from each reel motor by removing the three screws from each.

NOTE: On some machines there may be a shim below the reel holders, which is for the height adjustment, and this should be kept and re-installed when it is refitted.

Once all these mechanical parts have been removed then the 5 screws holding the dust cover onto the deck can be removed and then the cover itself can be removed, giving access to the mechanics of the machine. When lifting off the dust cover be sure that it does not catch the front of the scanner.
This plate may be cleaned with alcohol if necessary.

1.2 REMOVING THE LONGITUDINAL HEADBLOCK

Removing of the longitudinal headblock may be necessary if either of the longitudinal heads (Erase, time code/cue/control track) are to be replaced, but it will definitely be necessary if the pinchwheel and guide carriage is to be removed as the headblock covers the carriage's fixing screws.

The longitudinal headblock is held in place with three M2.5 x 8 screws fitted with washers. Carefully remove these screws, and lift the headblock up. The headblock is fixed to the machine with an 8 pin rigid connector as well as a three pin wire connector which is fitted with a small plastic connector. When the headblock is loose, lift it up slightly and use a small screwdriver to remove the three pin connector from its underside. NEVER pull directly on the wires to remove this connector as they are fragile and will break easily.

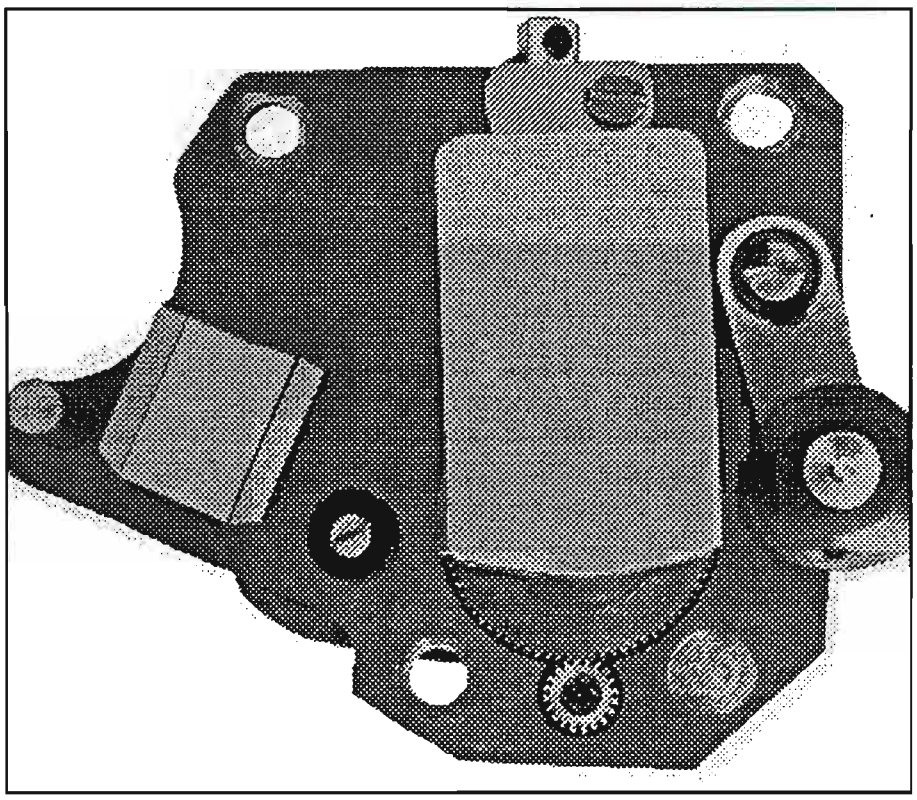

Figure 5: Longitudinal headblock

1.3 REMOVING THE PINCHWHEEL AND GUIDE CARRIAGE

In the top center of Figure 5 the pinchwheel and guide carriage is attached to the cam engagement gear via the linkage arm. This link is made with a small pin. This pin is removed by unscrewing the screw of the small spring bracket and removing both the bracket and the pin below it. Once this has been removed the linking arm can be pulled out of the arm and then the arm pushed out of the way. The pinchwheel and guide carriage is fixed to the deck plate in three places. Each of the fixation points is held down with two screws of M 2.5 x 6mm. Two are located next to the rail on the left-hand side of the carriage, and one adjacent to the rail on the right-hand side. Remove all six screws, along with their washers. Pull the carriage towards the front of the machine to avoid the reel motors, then slightly lift the rear end of the carriage and remove it from the machine, making sure that it does not catch the lower edge of the front panel, or the scanner. Once this is removed, be careful not to loose the right-hand slider, as this is not secured to the carriage, it is simply pushed on.

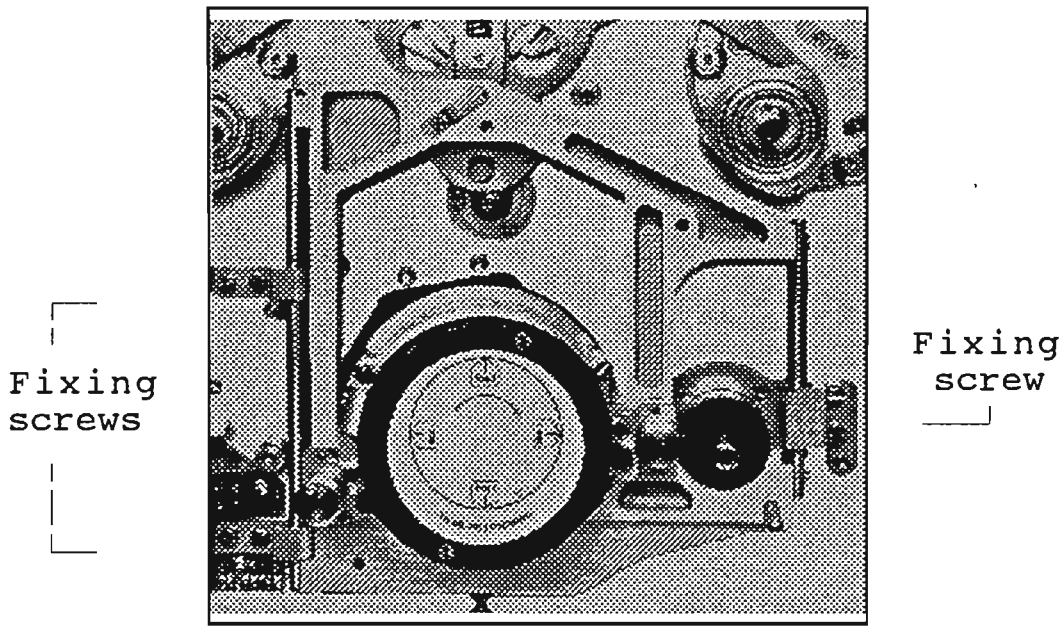

Figure 6: Fixation of the pinchwheel and guide carriage. (longitudinal headblock has been removed)

1.4 REMOVING THE REEL MOTORS

It is easier to physically remove the motors if they are initially placed in the position for 7" operation (see instruction manual).
Unscrew the three (1.6 x 3mm) screws with their washers that hold the dust cover to the motor if this has not already been removed as explained under removal of the deck plate dust cover. Open the machine, remove the internal shielding which covers the deck plate circuit boards then remove the grey plastic cover of the reel motor in question, each of which is held on by two screws with washers, accessible inside the machine.

NOTE: Pay careful attention to the position of the ribbon cables under the plastic covers, as their incorrect installation when re-mounting the motor will prevent the motor being put into the 7" operating position.

Next, remove the ribbon cable from the connector on the motor circuit board. Remove the three allen screws (2mm) (1.5mm on the early machines) from the top side, while supporting the motor from the inside, while moving the motor lift the parking brake to prevent it catching the motor (see parking brakes below). Take care that the ribbon cables do not get damaged when removing the reel motor. Gently lower the motor. Both reel motors are removed in the same manner. The part numbers for replacement motors are as follows:

Complete Left reel motor 71 10080 000
Complete Right reel motor 71 10081 000

No further intervention on the reel motors can be made from this point. If the bearings etc are worn out then the entire motor must be replaced.

NOTE: Beware of the powerful magnetic field of the reel motors, once the cover has been removed. They will attract small screws and washers. It is therefore recommended to place them in an anti-static bag.

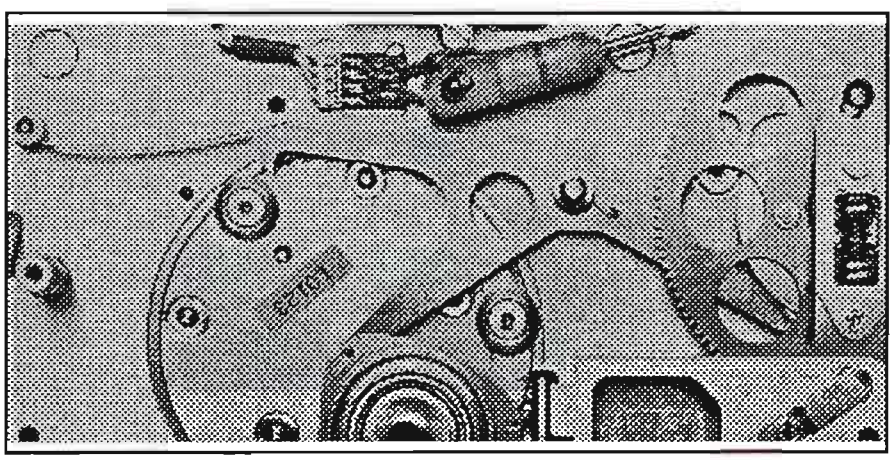

Figure 6 : Left-hand parking brake, and differential transformer, with its connection wires.

1.4.1 RE-FITTING THE REEL MOTORS

To refit the reel motors, proceed in the reverse of the above procedure, and pay special attention to the correct positioning of the ribbon cable inside the grey plastic motor cover. Make sure that the brake arms are correctly positioned in their cam slots, and that the ratched mechanism operates correctly once the leaf spring has been replaced on the parking brake arms.

Once the reel motors have been re-installed, verify that they can be moved freely to both the 5" and the 7" operating positions, and that they do not block.

1.5 REMOVAL OF THE PARKING BRAKE ARMS

The park brake arms are the two forked pieces, with hooks on the end, that make mechanical contact with the reel motors, and prevent the tape from spilling from the reels when the machine is in stop. To remove these, simply remove the 1.5mm circlips, and their washers. The park brake arm for the supply motor is different to that for the take-up motor, and can be identified by the letter engraved on the upper side of each piece, next to the circlip. The letters are in French and are as follows:

G (gauche) = Left D (droite) = Right

Before moving either of the parking brake arms, lift the leaf spring over the arm to allow the arm to move around freely back and forth.
For the left-hand park brake, the support for the cam motor's differential transformer must be unscrewed (a single screw) before the brake arm can be removed.

NOTE: It is suggested to make a small pencil mark on the deck plate before the screw mounting of the differential transformer is removed. This will allow approximate re-alignment when re-fitting it. (Accurate adjustment will still have to be made but this will give an approximate position.)

Once this is unscrewed, slightly lift the differential transformer, in such a way as the parking brake arm will just clear the connections to the differential transformer.

WARNING: Be very careful with the connection wires of the differential transformer as they are only 0.05mm in diameter and break very easily. If any of these wires are broken the carriage mechanism will not work correctly and the whole transformer will need to be replaced.

Carefully remove the park brake arm. To remove the right-hand park brake arm, the procedure is the same as for the left side, except there is no differential transformer on this side. The arm will just pass between the cam drive cog and the pillar on the deck plate.

1.5.1 RE-FITTING THE PARKING BRAKE ARMS

Proceed in the reverse order of the above method, and be sure that the leaf springs are re-fitted. Also be careful not to damage the wires of the cam differential transformer, and also make sure that the two brakes are on their appropriate side. The innermost end of the brake arm should sit correctly in its groove on the cam. Do not forget to re-fit the cam motor differential transformer and its support. (Accurate electrical adjustment is covered later).

1.6 REMOVAL OF THE COMPLETE SCANNER

The complete scanner of the NAGRA-D can be replaced. This will be necessary if the bearings for the rotor are worn or if there is another problem with the scanner such as worn ramp. If the scanner is suffering from a damaged/worn head it is possible to replace the scanner rotor containing the heads.

To remove the scanner, firstly, open the deck plate and remove the brown ribbon cable (connected to J4). Next remove the white connector J1 on the scanner motor circuit A8. Remove the scanner and capstan servo circuit A7 from the machine, then remove the record and playback equalizer A5. Now remove the six Pan head screws on the three mounting shoes of the scanner assembly, Be careful not to loose these shoes. The scanner can now be removed towards the inside of the machine.

To refit the new scanner, firstly the upper deck plate dust cover must be removed (see earlier), reverse the above procedure and refit the scanner. Once the new scanner is in place, fit the two alignment pins into the holes provided in the pinchwheel carriage, which must be in the fully forward position towards the scanner. Adjust the setting screw (nut) located on the front edge of the carriage in such a way as it just touches the front of the scanner. Lock this position with the locking nut, taking care that the upper edge of the adjustment screw is in such a position that the hexagonal head of the screw has its upper edge parallel to the deck plate/carriage (flat). Remove the two alignment pins and then re-install the dust cover as explained earlier in the manual.

All the electronic calibration (speed / phase etc) of the scanner are covered in the electronic calibration section of this manual.

1.6.1 REMOVAL OF THE SCANNER ROTOR

The scanner rotor of the NAGRA-D can be removed and replaced if necessary, however this is the only part that can be replaced within the scanner.

To remove the scanner rotor, firstly, open the deck plate and remove the brown ribbon cable (connected to J4), as well as the connector (8 wires) connected to J1. Close the deck of the machine, remove the 4 long screws and their washers located around the upper/rear cover of the scanner, two on each side of the scanner. (not the two screws that hold the cover on). Carefully lift this vertically until it is clear of the scanner making sure that it does not touch the scanner surface, as this may cause damage. Open the deck plate, and remove the three screws with their washers that hold the scanner circuit A8 in place on the bottom of the scanner.

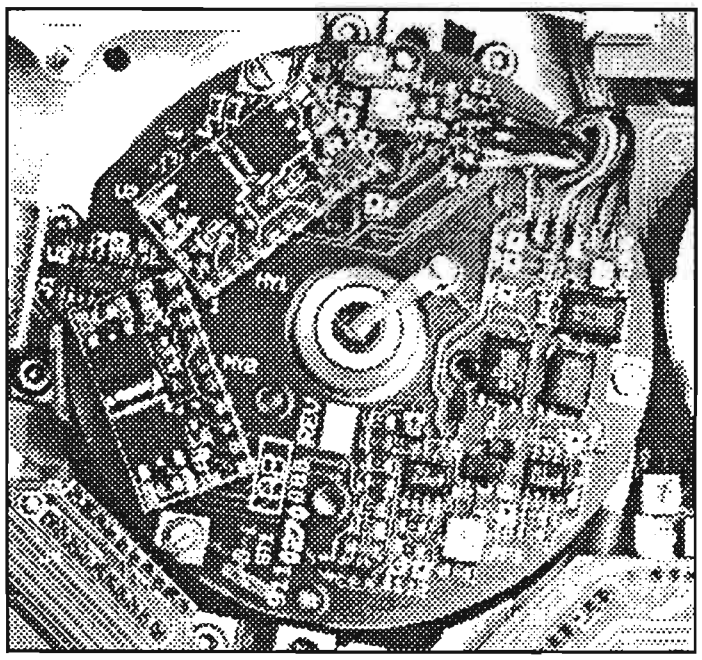

Figure 7: Scanner motor circuit A8 held by 3 screws

When the circuit is removed, be careful not to damage, or move the position of, the photo transistors and diodes mounted on the rear of this circuit. Next, loosen the 2mm Allen screw (maximum ¼ of a turn) located in the collar at the bottom of the rotor. The upper drum of the scanner may now be lifted vertically from the main scanner lower drum housing. DO NOT touch the heads as they are delicate. To remove the scanner bearing housing, open the deck again, and hold the scanner circuit to one side and pull the rotor from the bottom of the scanner. This part of the rotor contains powerful magnets, and the force of these will be felt when pulling the rotor out. When removed, be careful not to loose the crown washer, that is located between the rotor and the bottom bearing. (positioning of this washer is covered in the re-assembly).

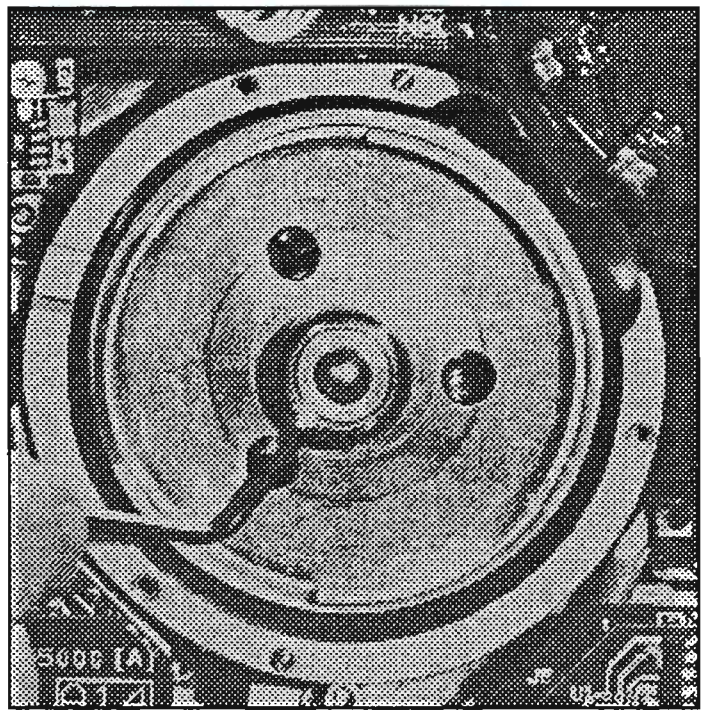

Figure 8: Scanner rotor with Allen key fitted

No further intervention on the scanner can be made on the scanner motor or upper drum. The heads in the upper drum are very accurately adjusted and cannot be replaced without special alignment equipment.

Note: If the scanner rotor is to be replaced for any reason then a replacement rotor must be ordered from the factory, and the serial number of the machine and the serial number of the scanner must be stated when placing the order as each one in individually aligned before shipment. The serial number of the scanner can be found on a small white sticker on the right-hand side of the outer housing of the scanner.

1.6.2 RE-ASSEMBLY OF THE SCANNER ROTOR

Ensure that the parts are all clean. Carefully replace the scanner's upper drum through the bearing housing, being careful not to damage the heads. Re-install the spring washer onto the central axle, with the center ring of the spring washer nearest to the bearings and the outer edge towards the magnet holder (rotor). Replace the magnet holder, making sure that the Allen screw is aligned with the "flat" on the shaft. Fit the alignment plate to two of the screw holes (normally used to secure the scanner circuit) and then tighten the allen screw completely while pressing the magnetic rotor to be sure it is firmly in place. Check that the scanner spins freely and that there is no vertical play. Remove the alignment plate and refit the circuit to the bottom of the scanner, using the three screws with their washers, be careful not to damage the photo diodes and transistors mounted on the rear of the circuit. Carefully pass the ribbon cable to the inside of the machine then pass the outer cover carefully over the scanner (avoiding contact with the heads, this clearance is very small so a great deal of care is needed). Replace the four screws of the scanner, and tighten them in turn. Reconnect the ribbon cable onto J4 on A5 inside the machine. Clean any fingerprints from the upper drum using alcohol.

The part number of the "half-moon" alignment plate necessary here is 7110952000.

1.7 REMOVAL OF THE CAPSTAN MOTOR

In order that the capstan motor can be removed, it is necessary to remove some of the internal electronic circuits. Open the deck of the machine, and remove the connectors J2, J4 and the ribbon cable J5 from the circuit A7, and remove the circuit completely. If the scanner has already been dis-assembled then the connector J3 is already dis-connected from the other end. If this is not the case then it too must be dis-connected. Remove the 9 nylon locking nuts that hold the circuit A7 in place and then lift the circuit slightly in order to gain access to the last two connectors on the rear side (J1 and J6 at either end that must also be unplugged before the circuit can be removed. Now, remove the circuit and place it in an anti-static bag.

The circuit A6 to the right of the capstan motor must also be removed, to do this remove the connectors J2 (3 wires) on the left-hand side of the circuit and the ribbon cable J4 and the 6 wire J5 located on the right-hand side of the circuit. Now unscrew the 4 metal M4 support pillars of the circuit and remove it taking care not to damage the coil that sticks out from the rear of this circuit.
Next remove the four conical headed screws around the capstan motor and its metal locating ring, and disconnect the ribbon cable number 53 from the connector, and the entire capstan motor can now be removed inside the machine. Be careful not to damage the ribbon cable #53.

No further intervention on the capstan motor can be made.

1.7.1 RE-MOUNTING OF THE CAPSTAN MOTOR

The Capstan motor is re-fitted in the reverse of the above procedure. When the metal locating ring is replaced, make sure that it is orientated with the flat side facing to the right side of the machine.

1.8 REMOVAL OF THE CAM MOTOR

Firstly, unsolder the two cam motor connection wires and make a note of the polarity, on the interconnection circuit board B3 (E1 and E2) then, from the top of the deck, turn the toothed drive wheel of the cam motor in such a way as the third mounting screw is visible through the hole in the wheel. Unscrew the three mounting screws around the cam motor and remove the entire motor.

No further intervention on the motor can be made.

1.8.1 RE-FITTING THE CAM MOTOR

Replace the cam motor in the reverse order, and be sure to align the toothed wheels on the deck so that they meet correctly, and that the screw hole in the motor are aligned with the appropriate holes in the deck. Replace the screws and their washers, but do not overtighten these screws as they bite into plastic, and do not force the teeth of the cam motor cog and the sprocket together leave a tiny play so that they drive smoothly between one another. Re-solder the two connection wires onto the interconnection board B3 with the correct polarity.

1.9 REMOVAL OF THE TENSION ARMS

The two tension arms are removed in the same way. The left-had one is explained here, as it is a little more complicated due to the counter circuitry fixed to it. Open the deck plate of the machine, and remove the circuit A5. Disconnect the ribbon cable J3 and the other two connectors J1 and J2. Loosen the five M4 metal pillars, and remove the circuit taking care not to damage the hybrid circuitry mounted on it. Slightly open the fork of the differential transformer's arm using a small screwdriver. Remove the tension spring, connecting the tension cable and the tension roller arm using a pair of tweezers. If the arm is to be removed, then the 4 connection wires (E1 - E4) of the differential transformer circuit A2 must be unsoldered. These cables are very thin and must be treated carefully.
Open the deck plate and remove the circlip on the bottom end of the tension roller arm. The assembly can now be removed. Do not loose the Mylar washer fitted onto this axel. The right-hand tension arm is removed in exactly the same manner, except there is no counter circuit to worry about.

1.9.1 RE-MOUNTING THE TENSION ARMS

Re-mounting of the tension arms is the reverse of the above. When they are re-installed, be sure that the Mylar spacer is fitted and that both the arms move freely throughout their travel distance.

2.0 REPLACING THE PINCHWHEEL CARRIAGE.

Make sure that the right-hand slider of the pinchwheel carriage is replaced, in such a way that the brass sleeve is located equi-distant between the two ends of the slider. Replace the pinchwheel carriage, then insert the two steel guide pins (supplied in the tool kit) into the two holes provided in the carriage and the deck plate. Once in place then tighten the six screws in turn. Leaving the pins in place, adjust the nut with the locknut, on the front of the carriage, in such a way as the central thread just touches the front of the scanner. Tighten the locknut, and then remove the guide pins. Put a few drops of PDP oil on the two sliders of the carriage, and make sure that the carriage slides smoothly throughout the length of its travel.If this is not the case then re-align it. If it sticks, even slightly, then the machine will encounter problems when loading the tape.

Re-connect the cam linkage arm to the front of the pinchwheel carriage, and insert the pin. Re-fit the small leaf spring, using its screw. Turn the cam wheel so that the carriage is fully forward and check that the screw in the front of the carriage is still just in contact with the front of the scanner.

2.1 TAPE PATH HEIGHT ADJUSTMENT

Before the deck plate dust cover is replaced the height of all the components of the tape transport must be adjusted in height. However, in order to do this, all the guides and rollers must first be replaced. (naturally they will have to be removed again to fit the dust cover however the height should not change). Remove the longitudinal head block (if it is still fitted), as explained earlier, and install the 12mm alignment pilar onto the screw below the longitudinal head block. Fit the alignment table (KSA number XX XXXXX XXX) onto the machine, which is suspended by three pins, and is located by two location pins. Insert the dynamometer and adjust its height for zero using the recently installed, 12mm peg. Once this is calibrated, this is the reference for all the other height adjustments.
Remove the peg, refit the longitudinal headblock and then proceed to align the height of all the other parts of the transport. Start with the rotary guide (behind the supply tension roller) and insert 1/10mm shims so as to get its height to 0 +/- 5 hundredths. This guide, in normal operation "floats" therefore in order to check the height correctly, press on its cover and tighten the screw in such a way that the guide is blocked and does not rotate. Once the height is correct, loosen the screw and lift the head slightly so that the guide turns freely. The tension roller must also be at the same height and is adjusted by adding shims (underneath). There is no height adjustment for the guide next to the longitudinal headblock, as this is factory set and should NOT BE TOUCHED under any circumstances. The other tension roller is done in the same way. The input and output guides of the scanner are much more critical, and must be at zero +/- 1 one hundredth of a mm.(if the guides have been replaced). These are adjusted by installing the special caps (supplied in the tool kit for the machine). The sealed screw is then loosened, and the height adjusted by turning the top vertical screw. Once in spec, tighten the front locking screw and remove the covers. Do not put too much pressure on the center screws as this will cause them to go out of alignment.(the fine adjustment of these guides is done electronically with the RF, later). In any case all of these will have to be removed in order for the deck cover to be replaced.

2.2 SPECIAL TOOLS

A complete tool kit for the NAGRA-D is available Part number 71 10950 000. It includes all the special tools required for mechanical interventions. Some of the tools are standard screwdrivers etc. some are specific tools only for use on the NAGRA-D. The list of all tools in the kit with their corresponding part numbers is listed below. For electrical calibration, a standard set of electronic measurement equipment is needed, listed at the start of the electrical calibration chapter.

LIST OF SPECIAL TOOLS

Part Number	Description	Qty
0190 901 082	Eprom extractor	1
0190 901 083	Open hex spanner 14mm	1
0190 901 084	Allen screwdriver 1.5mm modified	1
0190 901 085	Two pin screwdriver N°5 for special nuts	1
0190 901 086	Gauge, for pinchroller adjustment	1
0190 901 088	Allen screwdriver 0.9mm	1
0190 901 089	Driver modified for entry/exit guide alignment	1
3400 305 036	Cylindrical pin 3.0H 8 x 50	2
3915 180 721	Screwdriver cross-head N°1	1
3915 180 722	Screwdriver cross-head N°2	1
3915 181 720	Screwdriver flat N°0	1
3915 181 740	Screwdriver flat N°2	1
3915 181 750	Screwdriver flat N°3	1
3915 182 140	Screwdriver Jewelers N°140	1
3915 210 040	Spanner 4.0mm	1
3915 210 050	Spanner 5.0mm	1
3915 210 055	Spanner 5.5mm	1
3915 210 080	Spanner 8.0mm	1
3915 210 123	Spanner 12mm and 13mm	1
3915 220 040	Nut driver 4.0mm	1
3915 220 050	Nut driver 5.0mm	1
3915 220 055	Nut driver 5.5mm	1
3915 230 120	Allen Screwdriver 2.0mm	1
3915 230 125	Allen Screwdriver 2.5mm	1
3915 231 125	Allen Screwdriver 2.5mm (ball ended)	1
3915 240 150	Allen key 1.5mm	1
3915 240 200	Allen key 2.0mm	1
3915 370 010	Circlip pliers	1
3915 385 468	Tweezers straight N° MM	1
3915 385 470	Tweezers straight N° 16	1
3915 385 516	Tweezers curved N° 5516	1
3915 550 100	Correx (100g)	1

3915 560 150	Dynamometer 1.5 kg PESOLA (End Replaced by a loop N° 4266 014 000)	1
3971 000 220	Tool holder	1
3980 205 222	Loctite 222 (10 ml)	1
3980 205 601	Loctite 601 (10 ml)	1
7104 055 000	Grease SKL 100	1
7104 059 000	Oil PDP38 (4ccm)	1
7110 951 000	Kit for guide height adjustment (Entry and Exit)	1
7110 952 000	Half-moon rotor alignment plate.	1
7151 817 000	Special key for nylon circuit nuts	1
3980 300 020	Tooth pick	3

2.3 PARTS LIST

This list of parts for the NAGRA-D contains all the parts mentioned in this manual. Some of the parts are only available as pre-assembled assemblies and in this case the whole assembly must be replaced.

Main deck plate

7110 033 000 Outer tape guide pulley
0110 030 016 Outer tape guide cap
0110 030 042 Maylar washer for outer tape guide
0153 090 033 Washer(s) for outer tape guide height adjustment
3020 022 314 Screw for tape guide cap M2 x 3

7110 044 000 Rotary tape guide complete (control track guide)
3001 033 236 Fixing screw for control track guide cylindrical M 2.5 x 8
3312 410 644 Washer for screw of control track guide

7110 064 000 Pinchroller assembly complete
0110 064 005 Pinchroller tension spring
3001 033 136 Fixing screw for pinchroller cylindrical M 2.5 x 6
0110 064 002 Pinchroller support arm.

7110 086 000 Reel holder (left and right side)
0110 080 024 Locking clamp for reels
0110 080 025 Allen screw for fixing reel holders
0110 080 022 Spring for reel holders
3001 011 836 Fixing screws for dust covers of reel holders cylindrical M1.6 x 3
3321 001 734 Washer for dust cover fixing screws

Longitudinal headblock

7110 040 000 Longitudinal headblock (complete)
3001 033 236 Fixing screws for longitudinal headblock M 2.5 x 8
3312 410 644 Washers for fixing screws for longitudinal headblock
7110 050 000 Erase head
7110 041 000 Longitudinal head
7110 460 000 Full track erase head
0104 255 007 Azimuth disc thickness 1.3 mm
0104 255 014 Azimuth disc thickness 1.1 mm
0104 255 001 Adjustment cam (behind head for zenith adjustment)

Pinchroller and guide carriage

7110 060 000 Pinchwheel carriage complete
7110 064 000 Pinchroller complete
3001 033 136 Mounting screws for pinchwheel carriage cylindrical M 2.5 x 6
3310 002 500 Washers for screws of pinchwheel carriage
7110 160 000 Sliding bracket for right side mounting of the pinchwheel carriage
7110 161 000 Linkage arm pin for pinchwheel carriage
0110 060 006 Bracket for linkage pin
0110 060 004 Linkage pin
3001 022 336 Screw for bracket of linkage pin cylindrical M 2 x 3
3351 002 544 Elastic ring
0108 245 004 Mylar washer
0104 155 004 Adjustment washer
7110 037 000 Scanner entry guide pre-assembled
7110 038 000 Scanner exit guide pre-assembled

Differential transformers

9210 414 000 Winding of differential transformer with spring
3351 002 044 Elastic ring 2mm
0110 414 005 Spring for pinchroller carriage differential transformer
0110 414 004 Spring for tension arms differential transformer

General

3006 533 036 Screws for main deck dust cover pan M 2.5 x 5
7110 167 000 Cover for internal battery pack
7110 190 000 Plexi-glass lid
0110 001 005 Screw for closing deck plate of NAGRA-D
7110 031 000 Supply reel drum
7110 032 000 Take-up reel drum
7110 165 000 Left brake leaf spring
7110 166 000 Right brake leaf spring
0110 150 010 Corner rubber protection and foot for NAGRA-D
4064 001 055 Modulometer for NAGRA-D

CHAPTER III

CALIBRATION SECTION

1.0 NADCOM software for the PC
1.0.1 Installation of NADCOM

1.1 ALIGNMENT AND CALIBRATION OF
1.1.1 Pinchroller
1.1.2 Tension arms
1.1.3 Supply tension
1.1.4 Take-up tension

1.2 ELECTRONIC CALIBRATION
1.2.1 Power supply voltages
1.2.2 Cam position
1.2.3 Reel motors
1.2.4 Scanner
1.2.5 Capstan motor

1.3 FORMAT ADJUSTMENT
1.3.1 Control track
1.3.2 R.F. envelope
1.3.3 Recording current
1.3.4 Equalizer taps
1.3.5 Half speed control track
1.3.6 Cue track

1.4 ELECTRONIC CIRCUITS PARTS LIST

1.5 EPROMS IN NAGRA-D

1.6 EQUIPMENT NECESSARY

GENERAL

In order to do any calibration of the NAGRA-D a PC containing the NADCOM software must be on hand. This must be connected to the NAGRA-D via the ND-PCA accessory. The "Wizard's Tool Box" in the NADCOM has been abbreviated to "WTB" throughout this manual. Three tapes will also be needed for the complete calibration of the machine. The first is an "old" tape, one that was originally recorded on a working machine, and has since been played back for more than 500 hrs. The second is a special reference tape, that has only the control track and the RF 2 recorded on it, and the third is a work tape, meaning a normal blank tape that can be recorded on.

1.0 NADCOM SOFTWARE FOR THE PC

1.0.1 INSTALLATION

Connect the NAGRA-D to the PC via the accessory ND-PCA and copy the diskettes' contents into a sub-directory of the PC's hard disk "C:\NADCOM". The NADCOM software defaults to operate through the communication port COM2. If the PC is only fitted with one serial port this will probably be COM1. Thus, in order to launch the program type the following command: NADCOM -PCOM1. This tells the PC to use the communication port COM1.

The PC will now display the main menu of the NADCOM software.

Launching the NADCOM by typing either NADCOM -h or NADCOM -? will indicate the options.On certain screens it is possible to move from one selection to another. This is done by pressing either the right (or left) arrow keys or alternatively the TAB key. The up and down arrows on the keyboard are used to change values where possible.

The alignment and calibration of the NAGRA-D is done with the help of the NADCOM program on a PC. In order to continue in this section, once the NADCOM is installed and operating, select "U" on the main menu. (this is the line that is not printed on the screen, and is actually situated in the gap before the QUIT command). Press "U" to select the USER AUTHENTICATION and the screen will immediately demand a password. The actual password will be indicated later in this manual.

IMPORTANT NOTE: *Once the password has been entered it is possible to have access through the RS 422 port to every parameter within the machine. It is even possible to reprogram the internal settings of the machine. Thus this program is considered VERY DANGEROUS for an untrained user. Follow the steps in this manual VERY carefully to avoid causing problems within the machine. KSA accepts no responsibility, and voids its guarantee for faults caused inside the machine through incorrect manipulation of the NADCOM software.*

1.1 ALIGNMENT AND CALIBRATION

1.1.1 RE-FITTING AND ALIGNMENT OF THE PINCHROLLER

If the deck plate dust cover has not been removed from the machine then refitting the pinchroller requires the NADCOM software and a PC. Run the NADCOM software and on the initial screen type the letter "U" (USER AUTHENTICATION) followed by the password "LVZ". Then type "W" to enter the WTB. and the screen will show the POWER CONVERTERS menu. Press PgDn (page down) on the PC and it will change to the REELS SERVO screen. Move the cursor down to the position marked "LoadMech_On 1" set this to "0" by pressing the "+" key followed by "enter" two times. The motor for the pinchwheel carriage is now disabled. Gently move the pinchwheel carriage to the forward position by hand. If the deck plate cover is not fitted to the machine, then the pinchwheel carriage can be moved (when the machine is OFF) by simply turning the toothed cam wheel until the carriage is in its foremost position.

Refit the pinchroller assembly to its shaft and do not forget the mylar spacer below the pinchroller assembly, move the carriage to its fully forward position as explained above, insert the 5mm alignment tool into the gap in the right-hand side of the support and then press the roller firmly against the capstan shaft, while ensuring that the 0.5mm gauge is tightly pinched and then tighten the fixing screw and then remove the 0.5mm spacer (see diagram on the following page). The force necessary to lift the pinchroller from the capstan shaft is 900g +/- 50g. This is measured by pulling at right-angles using the pesola included in the tool kit. This tension is adjusted by turning the large screw located in the rear side of the pinchroller assembly. The easiest way of making this measurement is to place a thin piece of paper between the capstan shaft and the pinchroller and the 900g measurement is made when the paper falls out.

NOTE: To prevent the 900g force from pressing on the pulley and the capstan shaft, if further maintenance is to be carried out, move the cam slightly by hand so that the pinchwheel carriage is in the middle of its travel before continuing with the maintenance.

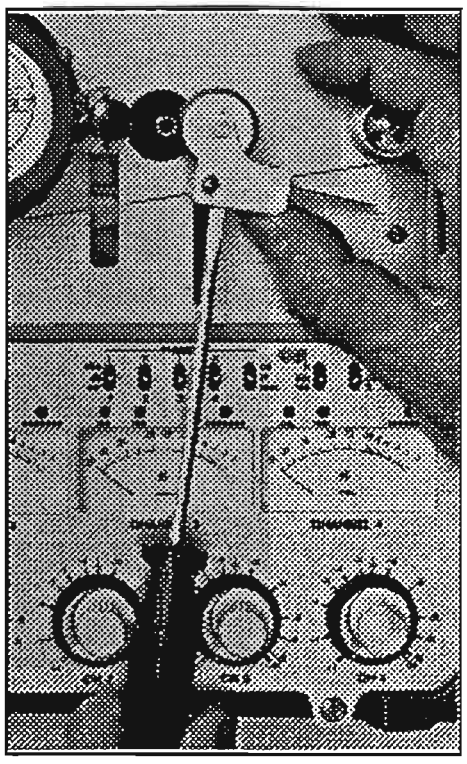

0.5mm spacer

Figure 1: pinchroller replacement showing the positioning of the 5mm spacer.

1.1.2 TENSION ARMS

LEFT SIDE TENSION ROLLER POSITION ADJUSTMENT

Mechanically fix the left tensiometer roller in the center of its travel. Connect a scope probe to TP11 of the "X" circuit A14 and loosen the securing screw of the left-hand tensiometer's differential transformer, and move it to obtain 0V A.C. voltage on the scope. Measure on TP24 of A14 for +6V DC. Turn RP2 to both of its end-stop positions, and check that this voltage stays at +6V DC.
Release the left tensiometer arm and adjust RP2 for max1.35VDC +0V -0.5V on TP24. Now push the tensiometer to its maximum inward position and check that the value is approximately 10 V DC or slightly above. If this is not possible re-check the center position and the AC value. The lower voltage(1.35V)is the most important, if this value is at 2V then the CPU thinks that there is a tape on the machine and will go to the PARK position and will not allow a tape to be put on the machine.

NOTE: When the cover is replaced on the deck plate the1.35Vwill increase to 1.8V due to the effect of the metal plate over the deck. RP2 will have to be rechecked once the cover is fitted, so as1.35Vis again read on TP24.

RIGHT SIDE TENSION ROLLER POSITION ADJUSTMENT

Mechanically fix the right tensiometer in the center of its travel. Connect a scope probe to TP21 of the "X" circuit A14 and loosen the securing screw of the left-hand tensiometer's differential transformer, and move it to obtain 0V A.C. voltage on the scope. Measure on TP29 of A14 for +6V DC. Turn RP3 to both of its end-stop positions, and check that this voltage stays at +6V DC.
Release the right tensiometer arm and adjust RP3 for max1.35VDC +0V -0.5V on TP29. Now push the tensiometer to its maximum inward position and check that the value increases to approximately 10 V DC or slightly above. If this is not possible re-check the center position and the AC value. The lower voltage (1.5V) is the most important, if this value is at 2V then the CPU thinks that there is a tape on the machine and will go to the PARK position and will not allow a tape to be put on the machine.

NOTE: When the cover is replaced on the deck plate the 1.5V will increase to 1.8V due to the effect of the metal plate over the deck. RP2 will have to be re-checked once the cover is fitted, so as 1.5V is again read on TP24.

SUPPLY TAPE TENSION ADJUSTMENT

NOTE: If the tape tensions of the NAGRA-D are not correctly set, then the machine will wait for a "time-out" before selecting STOP. This means that if STOP from REW (for example) is pressed, the machine will stop but the STOP led will continue to flash for several seconds before the parking brakes are applied.

Before adjusting the tape tensions of the NAGRA-D make sure that the machine is in the 5" reels operating position. If it is set for 7" operation replace the reel motors into the 5" position while setting the tape tensions.
If the tension rollers have not been marked with a pencil to show their operating position put the machine in playback and by means of a pencil, mark the position of both sides of each tension roller on the deck plate. (these small pencil marks can later be erased). Switch the machine off, fit a full 5" reel of tape to the supply reel holder and lace the tape around the outer mobile guide and around the left-hand tension roller. Pull the tape in such a way as it only just touches the fixed guide to the left of the full track erase head. Attach the CORREX (100g) to the end of the tape, at right angles to the tape path as shown below. Hold the reel still and pull the tape with the tip of the CORREX until the left tensiometer is located between the two pencil marks made on the deck plate. Slightly agitate the reel back and forth around this point (only move the reel a couple of millimeters) and check that the tension is of 40g. If this is not the case then insert a 1.5mm Allen key into the Allen screw which is the termination of the tension wire behind the roller, mounted on the deck plate. Make sure that the roller is always in the operating position (between the pencil marks).

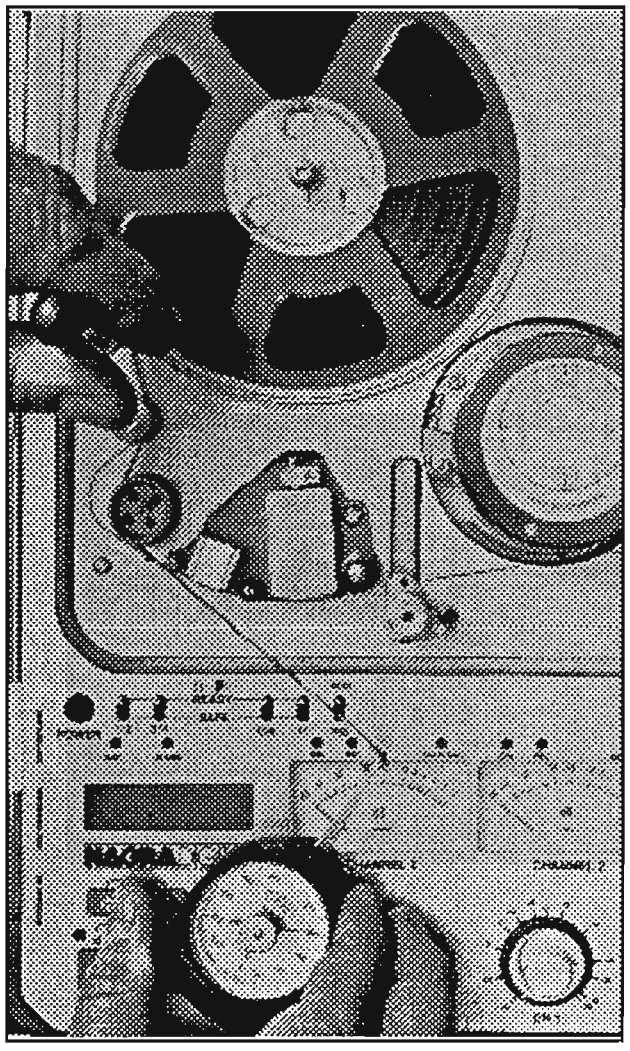

Figure 2: Correct angle for the supply tension.

TAKE-UP TENSION ADJUSTMENT

Before adjusting the tape tensions of the NAGRA-D make sure that the machine is in the 5" reels operating position. If it is set for 7" operation replace the reel motors into the 5" position while setting the tape tensions.
If it has not already been done, make pencil marks on the deck plate around each tension roller during PLAYBACK.
Switch the machine off, fit a full 5" reel of tape to the take-up reel holder. Lace the tape around the right-hand tension roller and pass it between the pinchroller and the capstan shaft (as indicated for the tape path on the deck plate). Pull the tape across in front of the scanner and attach the CORREX in such a way as it is as near as possible to the correct tape path and that the tape just touches the front of the scanner. Attach the CORREX to the end of the tape. Hold the reel still and pull the CORREX until the right tensiometer is between the two pencil marks on the deck plate. Slightly agitate the reel back and forth around this point and check that the tension is of 66g. If this is not the case then insert a 1.5mm Allen key into the screw which is the termination of the tension wire behind the roller, mounted on the deck plate. Make sure that the roller is always between the two pencil marks.

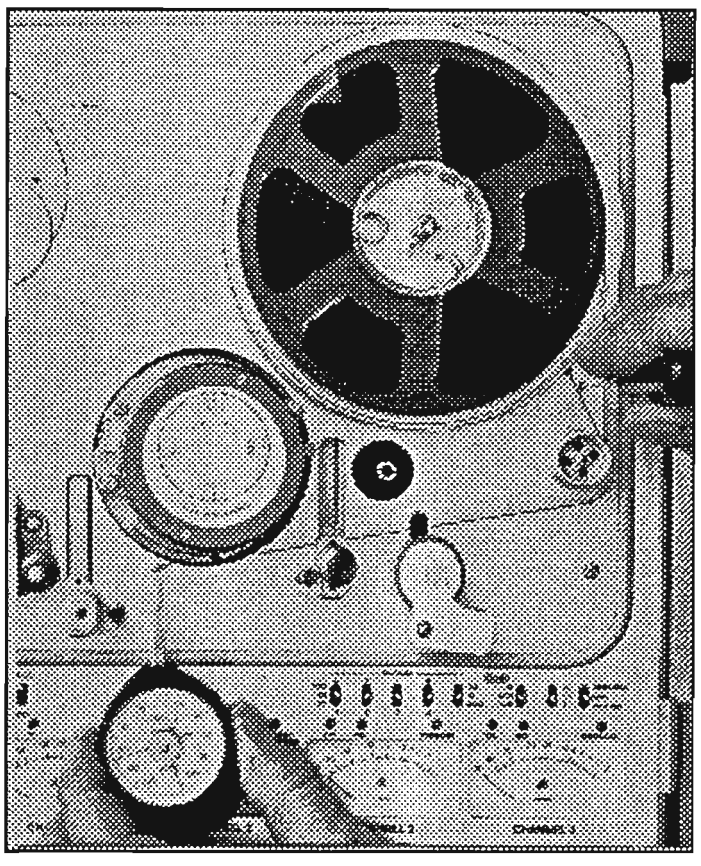

Figure 3: Correct position for take-up tension measurement.

1.2 ELECTRICAL TEST

Load the NADCOM program on the PC as explained at the beginning of this chapter and connect the NAGRA-D to the PC via the ND-PCA. Select the analog measures screen from the main menu, and the TensR and TensL should be at 1.5V when the rollers are in their outermost position, about 6V in their central position and 10V at their innermost position. This test also verifies the communication between the tension roller position sensors and the CPU of the machine.

1.2.1 POWER SUPPLY VOLTAGES

If the differential transformer for the cam positioning has been moved during maintenance, then it will be out of alignment, and the pinchwheel carriage will move backwards and forwards without stopping when the machine is powered up (it will eventually stop of its own accord on a "time out"). If this is the case, then loosen its fixing screw, and move it slightly to locate the central position as an approximate adjustment, the cam motor will stop this oscillation. (accurate calibration is covered later). If the oscillation occurs, the alarm light will flash and it will be impossible to switch off the machine using the power key. To turn the machine off in this case press "RESET HOLD" and "POWER" simultaneously.

Measure the DC voltages on all the test points TP2 - TP9 on A15. This is the vertically mounted inter connection board on the rear panel of the machine, behind the internal battery. The approximate voltages are shown below:

TP1	**TP2**	**TP3**	**TP4**	**TP5**
Gnd	-10V	+48V	+12V	+10V
	TP6	**TP7**	**TP8**	**TP9**
	-5V	-15V	+15V	+5V

1.2.2 CAM POSITION ADJUSTMENT

The adjustment of the mechanical position of the cam motor differential transformer is similar to that of the tension rollers differential transformers. Enter the NADCOM software and press the "U" for USER AUTHENTICATION" and the password will be demanded (See IMPORTANT NOTE at the start of this chapter) Enter the three digit password LVZ and press "enter" (Carriage return).
The PC will immediately revert to the main screen, however you will notice that there are more possibilities now. Select the "WTB" by pressing "W" and the PC will switch to the screen entitled "Power Converters". Press "PAGE DOWN" on the PC and the menus will change to the page entitled "Reels Servo". Move the cursor down to the position marked "LoadMech_On 1" set this to "0" by pressing the "+" key followed by "enter" two times. The motor for the pinchwheel carriage is now disabled. Gently turn the cam cog wheel to the reference position. The reference position is where the small 3mm hole in the cam cog is aligned directly above the hole in the deck plate (carriage almost fully forward).

Open the deck of the machine and attach an oscilloscope to TP10 on A14 (the "X" circuit) and loosen the screw of the cam motor differential transformer and move the transformer in order to obtain the minimum AC level on the scope. Now check that on TP 13 you measure 6V DC. Now turn RP1 from one end to the other and check that the 6V remains throughout. Mechanically move the pinchwheel carriage to the PARK position, this is where the pressure spring is sitting in the groove of the cam cog (or using the special alignment tool number 0190901092 fitted to the cam and the right-hand parking brake to align this position on machines not fitted with the grooved wheel). Measure on TP 13 and adjust RP1 to obtain 8.5V DC. Move the cam to the STOP position, this is where the pinchwheel carriage is as far as possible from the scanner and check that on TP 13 there is 6.5V DC. Now advance the carriage so that the carriage is next to the scanner and check that on TP 13 there is 3.5 V DC.
Reset the "LoadMech_On" from "0" to "1" in the NADCOM and press F10 until the NADCOM returns to the main menu. Select ANALOG MEASURES on the main menu, and look at the position CARRIAGE and the voltages measured above will be indicated. It is now possible in the "WTB" to send the commands for each of these positions and the carriage mechanism will move to the correct position, the procedure is as follows: In the "WTB", put the cursor on the "AddrDA" position and press the "+" key. A sub-menu, Reels Servo, will appear. Put the cursor on the "LoadingPosCmd" and press "enter" now move to the "DATA DA" position and press the "+" key, another sub-menu will appear. Type in the values according to the table below and check that the carriage of the machine responds correctly. Commands are entered by pressing "enter" twice.

Command N° (in Hex)	Function of carriage
1C	PARK (load tape)
8E	STOP position
EC	SCANNER POSITION

NOTE: The AddrDA must stay on 05 throughout this test. If this is not the case then return to Loading mechanism commands and reset it as explained above.

1.2.3 REEL MOTORS

Check the reel motors servo's with respect to the position of the tension arms. This is an interactive test.

NOTE: This tests can be dangerous for the brakes. Before the reel motors are turned on,check that the parking brake arms are disengaged from the reel motors by selecting STOP. This test is made with no tape on the machine.

In the NADCOM select the "WTB", and the "Power Converters" screen will appear. Check that the "R_ReelConv_On" and the L_ReelConv_On" are both set to "1". Press "Page down" and the menu will change to "Reels Servo". Move the cursor to the "ReelsCmd" (presently 01) and press "+" to have the sub-menu. Select the "ReelsCmdOFF" by pressing "enter" and now VERY SLOWLY turn the reel motors through 360° (supply reel clockwise and take-up reel anti-clockwise) by hand and make sure that there is no back tension on either motor. Now in the sub-menu, select ReelsCmdPlay, then hit "enter" twice, and both reel motors will start to turn. Gently move the tension arms towards the center of their travel, and check that each reel motor comes to a stop in the center of the tensiometer's travel, slowly release the tensiometers again and check that both reel motors start to turn again. While the reel motors are spinning, select the "ReelsCmdOff" in the sub-menu followed by "enter" twice and the reel motors should stop spinning.

1.2.4 SCANNER

Either load a tape on to the machine, or fix (by means of a small piece of scotch tape) the tensiometers approximately in their half-way position. Press "RDY" on the keyboard of the machine, and the scanner will start to turn. In the "WTB", press "Page down" until the menu "Scanner and Capstan" is on the display. Move the cursor to the position "Start Scan" and change it from "1" to "0" by pressing the "+" key followed by return, the scanner will stop. Then press the "+" key to change it from "0" to "1" again and check that it starts again. The ready led on the keyboard of the machine will not come on if these commands are send via the NADCOM. It will only be active if the keyboard is used to switch the scanner on and off.

NOTE: The scanner on the machine will stop of its own accord after 1 minute so make sure that the test is done before this happens, if not then press "RDY" again.

The large "U" shaped circuit under the deck A7 is the Scanner and Capstan Servo board. The left-hand side of this board is the scanner part, and the right-hand side is the capstan part.

SCANNER FREE SPEED ADJUSTMENT

To check the Scanner free speed, make sure that the machine is at the 48 kHz sampling frequency. Connect an oscilloscope (of frequency counter) to the connector J1 pin 2. Measure 8kHz. exactly using a precision frequency counter. This is to check the reference frequency necessary to synchronize the scanner. For other sampling frequencies, the frequency of the reference is given by the following calculation:

$$\frac{48k}{8k} \quad \frac{44.1k}{X} \quad \frac{32k}{Y}$$

An alternative method would be to connect an oscilloscope to J1- pin 2 on A7 as a reference, and also the tach signal from the scanner (TP 10 on A8) to the second channel. Compare these two signals on the oscilloscope and using RP1 on A7 adjust so that there is NO drift between the two signals.

SCANNER ROTATION SPEED

The scanner of the NAGRA-D rotates at 3750 rpm. Connect an oscilloscope to TP 12 on the scanner circuit A8 (fitted to the bottom of the scanner) and press "RDY" and the signal measured should be at a frequency of 62.5 Hz. (revolutions per second). The waveform is as shown below:

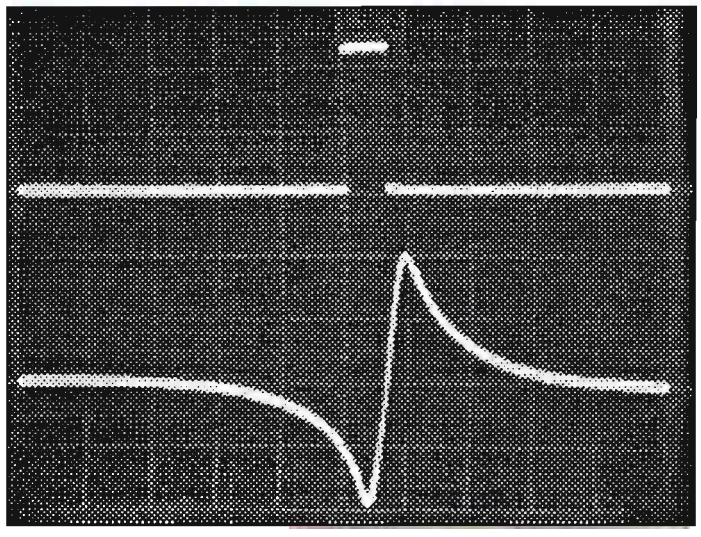

Figure 4: Oscilloscope photograph showing the 1 per revolution of the scanner.

Top trace 5V/div on TP 11.
Bottom trace 1V/div on TP 12

Use RP3 on the scanner circuit A8 to adjust the signal for 2 Vp ± 100 mVpp.measured on the negative cycle of the signal (beware of values if using a "x10" probe). Now put the probe onto TP 11 and check for a square wave of 62.5 Hz positive cycle with a duration of 130 μS.
In the "WTB", select "Free_Scan" from "0" (phase locked) to "1" (no reference) by using the "+" key, measure on TP 11 and verify that the signal is still 62.5 with a 130 μS duration. While still in the FreeScan "1" mode, measure on TP 4 on the Scanner and Capstan servo board A7, the non synchronized signal (a wandering square wave), adjust RP 1 on A7 for the slowest drift, preferably completely stationary. Now, in the NADCOM select Free_Scan OFF and the signal will be stable and locked.

1.2.5 CAPSTAN MOTOR

CAPSTAN FREE SPEED ADJ.

In the "WTB" Press "Page up (or down)" until the "Power Converters" menu is displayed. Move the cursor to "CapstConv_On" (presently 0) and change this to "1" using the "+" key followed by "enter" twice. The capstan motor will start to rotate (anticlockwise if viewed from the top of the machine). Return to the Scanner and Capstan menu on the PC (page down twice) and move the cursor to "Free_Capst" and "Free_Capst2" (presently both set to "0") set them to "1" using the "+" key. Now move to "CapstServo CT Play" (presently "1") and select it to "0" make sure the machine is still at 48 kHz sampling frequency and at the high (FULL) tape speed. Measure on TP 21 on the capstan servo board A7 with an oscilloscope and there will be a square wave. This is the tachometric frequency of the capstan motor.

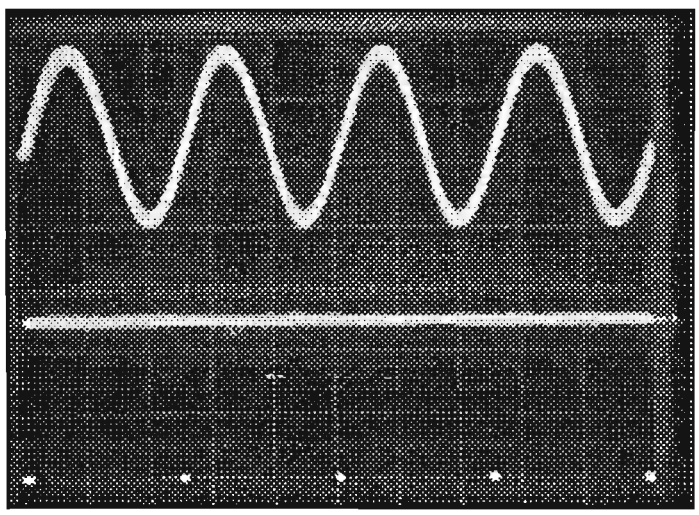

Figure 5: Oscilloscope photograph showing the Capstan tachometric signal at 48 kHz.

Top trace 1V /div on TP 17
Bottom trace 5V/div TP 21

Adjust using RP 3 to 2000 Hz. exactly using an accurate frequency counter, with the machine running at full speed. (1 kHz at half speed).
Alternatively, as with the Free Capstan adjustment, take the 8 kHz signal from J1 pin 2 on one trace of the oscilloscope and compare it with the capstan tach signal from TP 21 and adjust for NO drift using RP3.

Before continuing with the format adjustments it is recommended to switch the machine off and then on again in order to ensure that all the default settings of the machine are selected.

1.3 FORMAT

GENERAL

In order to make the adjustments needed to check that the machine is in the format, a special tape is required. This tape contains a control track and channel 1 RF signal containing a "hole" for the scanner phase adjustment and RF channel 2 normal. This tape can be used for the control track adjustment as well as the RF envelope adjustments.

NOTE: Before making any measurements on the RF it is recommended to thoroughly clean all the heads using alchohol and demagnetize both the scanner and the rest of the transport. Before making any changes with the NADCOM software, go to the "Miscellaneous settings" screen and copy the existing values for the control track settings at full and half speed, as well as the record head currents for head 1 and head 2 and the relevant TAP settings at 48 kHz, 44.1 kHz and 32 kHz. Write all these values down on a piece of paper, as this will avoid a lot of time trying to reset them. These values will only need to be redetermined if either the CPU board or the REC amplifier or the scanner itself have been replaced, otherwise the original values will stay correct, and can be entered directly.

1.3.1 CONTROL TRACK

Fit a work tape onto the machine and make a recording. Play back this tape and check that the control track measures 4 Vpp. on TP 15 on the scanner and capstan servo board A7. This tape is recorded at the correct height and level, use RP 2 to adjust the control track level sine wave.

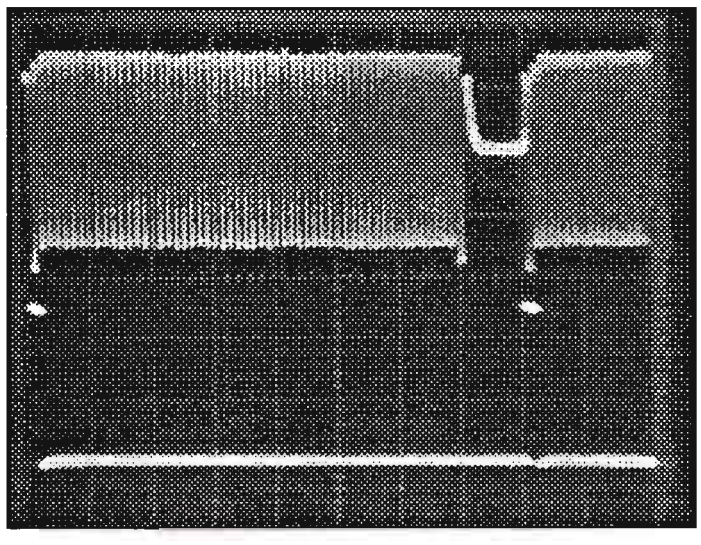

Figure 6: Oscilloscope photograph showing the Control track during playback. Top trace 1V/ div on TP15, Bottom trace 5V/ div on TP 22

1.3.2 RF ENVELOPE ADJUSTMENT

Fit the two special caps supplied in the tool kit (71 10951 000) on to the entry and exit guides of the scanner, being sure not to tighten them too hard. Once they are secure, loosen the locking screw in the top front edge of each guide and check that each of them is free. Install the R.F. replay tape onto the machine. Connect an oscilloscope onto the green two pin connector on A7 and close the machine.
Fit the cap and screw to the top of the entry and exit guides, then loosen the small red painted screw in the fron upper edge of the guide. Play back the tape and adjust the entry guide of the scanner, by inserting the special guide adjustment tool into the top of the guide and slowly turning it, in such a way as to have the correct RF signal.
Then do the same thing for the exit guide. Listen for the mechanical noise of the scanner during this procedure, and check that it is at its "smoothest" point.

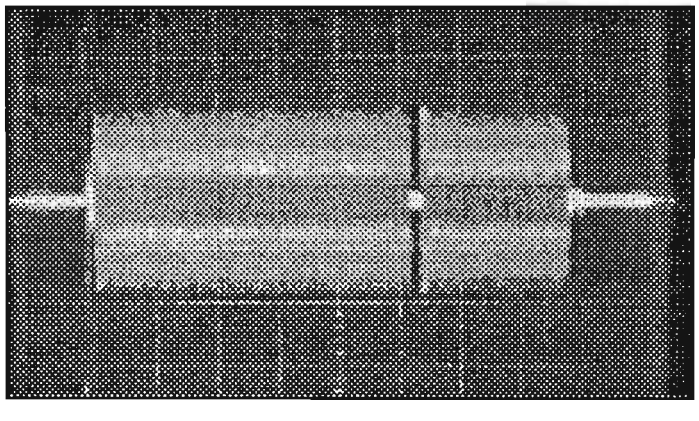

Figure 7A: Correct RF envellope with guides correctly adjusted.

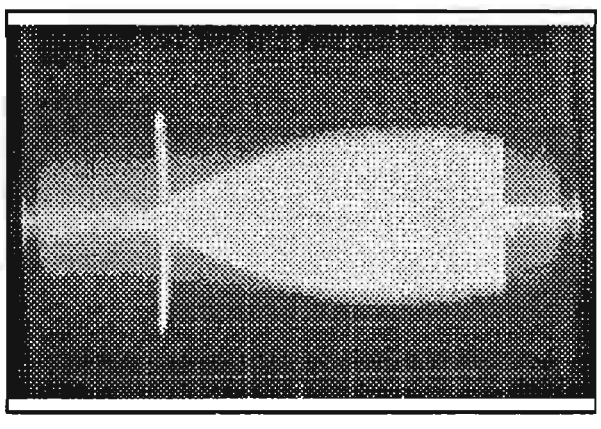

Figure 7B:

Right (exit) guide incorrectly adjusted

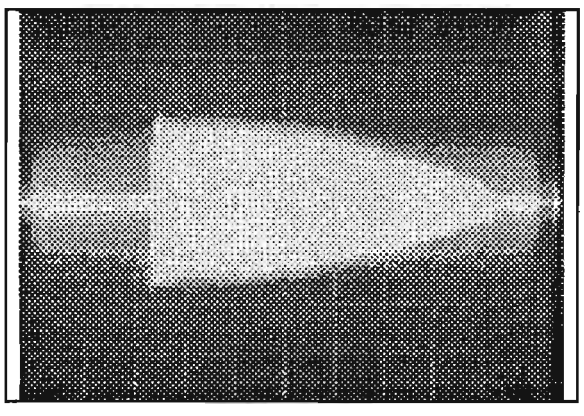

Figure 7C:

Left (entry) guide incorrectly adjusted

Make sure that the machine is at full speed and at 48 kHz sampling frequency. Using the NADCOM, go into the "M" (miscellaneous settings) screen and move the cursor to the control track setting (presently 119) and decrease this to about 89 using the arrow keys. Now re-align the RF envelope for the flattest possible shape by mechanically moving the guides. Then tighten the locking screws in the top of each guide, remove the special caps and reset the control track position to 119 by pressing the "R" (restore) key. Machines fitted with half-speed read after write have a tracking value of 100 at full speed.

CONTROL TRACK

Verify that the control track is still set to 119 at high speed.

NOTE: *Make sure that the machine is already in the playback with the carriage fully forward BEFORE the Allen key is inserted and that the Allen key is removed before STOP is pressed, as the key obstructs the travel of the pinchwheel carriage.*

Now while still monitoring the RF move the control track guide, using the Allen screw in the right-hand side in such a way as to get the maximum level of RF on the oscilloscope. (the control track guide is the one located immediately to the right of the longitudinal headblock and which presses with the adjustment screw on the side of the control track head). Never move the small screw in the front of this roller, as this height is very precisely set at the factory. Loosen the main fixing screw of the guide, move the Allen screw in order to have the max RF level on the scope, while monitoring the two pin connector on A7. To Check that the maximum level has been reached, use the PC to increase and decrease the control track setting from 119 (or 100 if half-speed read after write is fitted) and verify that the level falls equally when moving in either direction.

SCANNER PHASE

Keeping the RF on the oscilloscope, monitor on the capstan servo circuit A7 on connector J1 pin 1 and check that the rising edge, is aligned with the start of the gap in the signal. (trigger the oscilloscope on the RF signal).

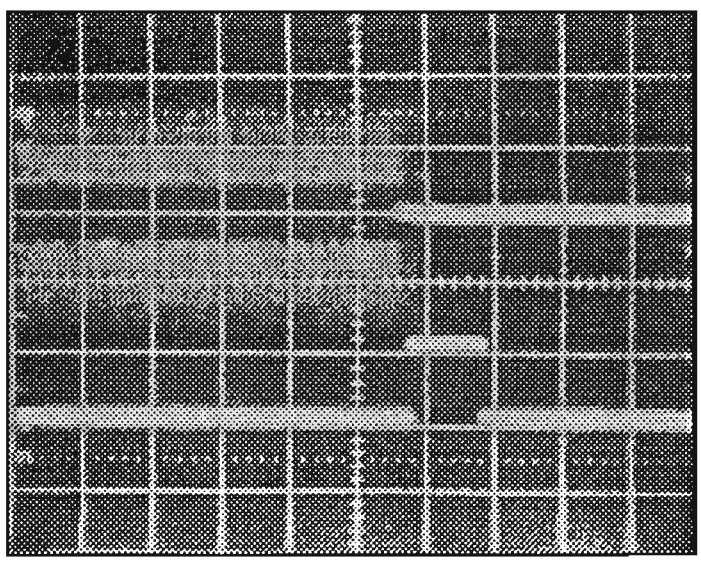

Figure 8 : Oscilloscope photograph showing the RF envellope 20 µS/div on J1-1

If the oscilloscope is now set to x10, the signal will appear unstable, this is due to the jitter from the tape, both from the original recorder machine and the machine presently under test. In order to adjust the jitter so that it is even, adjust the potentiometer "x" which has no RP number but is located on the small piggy-back circuit mounted on the circuit A7 (will be RP 4 on later versions of the circuit version B). Adjust this potentiometer such that the jitter is equally symmetrical either side of the moving edge.

If it is too far to the right, move it as far as possible to the left and then go back and repeat the previous adjustment, and verify that the RF is at a maximum when the control track setting is at 119 (or 100 if the half-speed read after write is fitted).

REMOVE THE REFERENCE TEST TAPE.

Install a work tape on the machine.

1.3.3 OPTIMIZING THE RECORDING CURRENT USING THE TAP SETTINGS

With the NADCOM connected, assure that the machine is at 48 kHz sampling frequency and at full speed. Reduce the recording current for Head 2 (RF 2) to 0. Monitor the RF envelope on the oscilloscope, trigger the oscilloscope using a second probe on the deck interconnection circuit connector J9
Sync the oscilloscope on the RF signal. The synchronization of the oscilloscope must be in HF so switch in the LF rejection on the oscilloscope. With the RF 2, set the zero point so that the line is in the center. (see diagram)

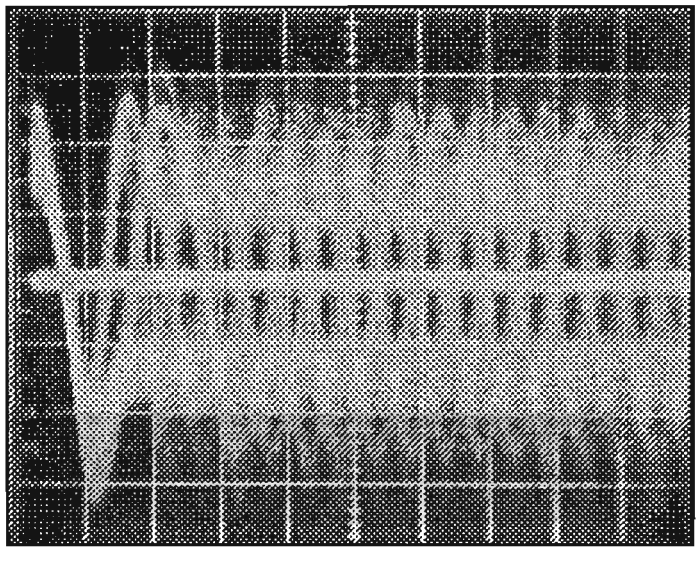

Figure 9: Oscilloscope photograph showing the "eye pattern".

It is now possible to adjust the equalizer tap settings using the NADCOM.
As a preliminary setting, set the taps (for 48 kHz and 44.1 kHz) as follows:

n-2	n-1	n+1	n+2
128	150	70	128

The resulting waveform on the oscilloscope is now much clearer, the signals are almost sine waves. For the best results the oscilloscope used must have a minimum bandwidth of 4 MHz. This adjustment is valid for the circuit 9110277000 version A or B for machines fitted with the circuit 9110277100 the procedure (TAP settinggs) will be slightly different.

Explanation of the taps and the delays:
See figure 11 (block diagram of equalizer taps)

1 = No delay
2 = 50 nS
3 = 100 nS
4 = 150 nS
5 = 200 nS

Our input signal is a spike with a duration of less than 50 nS. If we consider the 1 st multiplier (n-2) and were to set the tap setting to 128 (with all the other setting set to 0) our signal would be (see figure 13 part A on page 21).

If all four tap settings are set to 128, the only output seen would be #3 as there is no multiplier, however it would be delayed by 100 nS with respect to the input signal. We are just delaying, but not doing any equalizing.

Now, with our preset tap settings, and monitoring the "eye pattern", we must adjust for maximum height , and minimum jitter at the crossings. The record current is the adjustment for the height and the taps settings are the adjustment for the jitter and height.

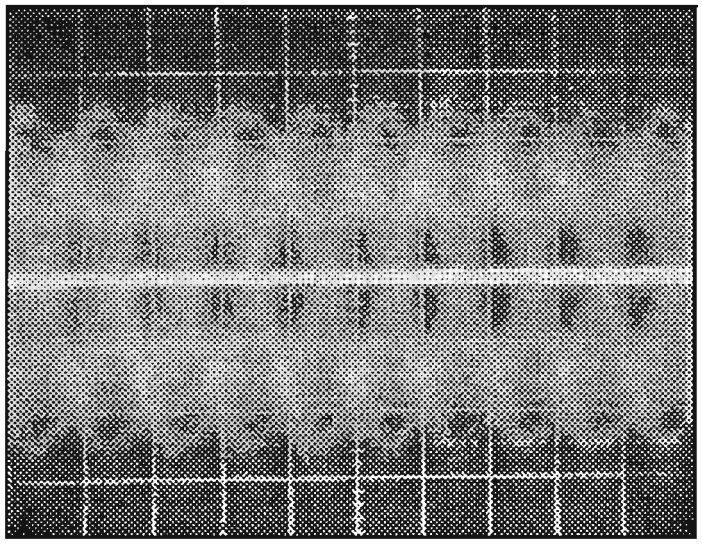

Figure 10: Oscilloscope photograph showing complete eye pattern.

1.3.4 RECORD CURRENT

Circuit version 9110277000

Observe the highest frequency indicated on the scope and set the cursor on the NADCOM onto the record current for Head 2 and reduce this value to "0" move the cursor to Head 1 and set it to 100 then increase it in steps of 10 and at a certain moment the low frequency part of the signal will start to increase quicker than the high frequency part of the signal. If this is continued then the high frequency portion will stop increasing altogether and will start to decrease again. Find the value for the maximum level of the high frequency portion of the signal. If the value is found to be somewhere between 150 and 160, set this value to 155.

This 155 is the first of the 23 values that need to be set (or at least checked, depending on the intervention that has been made) within the machine.

Now, reduce the record current of head 1 to "0" and repeat the above procedure for head 2. Once the correct value for both Head 1 and Head 2 have been found then press the "L" key to latch these values.
To check that the values have been correctly latched, change them a little and then press "R" to restore the latched values and the previously found values should come back.
When this is completed change the sampling frequency from 48 kHz to 44.1 kHz, but leave the tap settings at those for 48 kHz and repeat the above procedure for 44.1 kHz for both heads. (typical values for 44.1 kHz are between 145 and 170). Once this is complete then latch the new values.

Now select the sampling frequency to 32 kHz. however in this case the tap settings will need to be changed. Start by setting all four tap settings to 128 and adjust them in turn to obtain the best possible sine wave shape of the eye pattern. Generally the first tap (n-2) will be quite a bit higher than 128 and the other three (n-1, n+1 and n+2) will be nearer to 128. Once found repeat the procedure above for head 1 and head 2 to find the correct record current.
When all of these values have been found then latch each of them. The record current is now set and optimized at each sampling frequency rate.

Circuit 9110277100 revision A

Set both the switches S1 and S2 to the ON position. Now only a single frequency will be recorded, which is the Niquist frequency. Using the NADCOM adjust the record current for the highest amplitude. Now change the sampling frequency to 44.1 kHz and repeat (as above) and finally select 32 kHz and repeat it a third time. Once this is done return the switches to the OFF position. Each position must still be latched (as above).

1.3.5 OPTIMIZING THE EQUALIZER TAPS

Equalizer taps

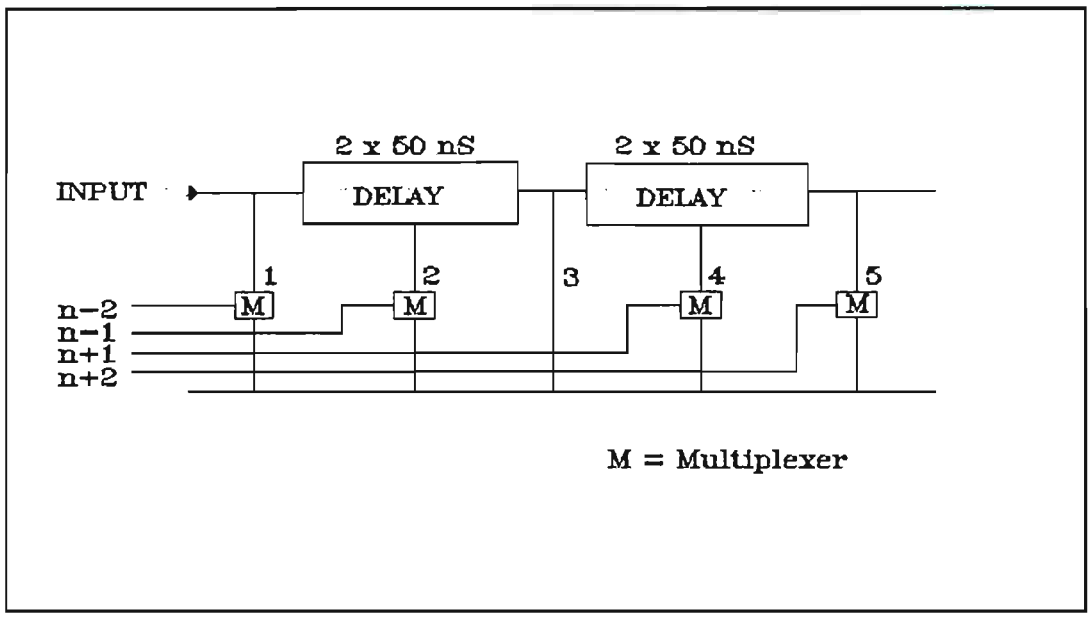

Figure 11: Block diagram showing equalizers.

The above block diagram shows that with a given input signal there will be 5 output signals indicated by the numbers 1 to 5.

N°1 - No delay
N°2 - 50 nS delay
N°3 -100 nS delay
N°4 -150 nS delay
N°5 -200 nS delay

If our input signal is a single positive peak saw tooth having a duration of less than 50 nS. then, depending on the tap setting chosen (for the first multiplexer), the signal at the output of the 1 st multiplexer (n-2) would be:

Tap setting	Resulting waveform
0	Negative sawtooth pulse
128	No signal
255	Positive sawtooth pulse

If the tap settings for all the multiplexers were set to 128 then the only output would be from the position N°3 as there is no multiplexer on this line, however it would be delayed by 100 nS (2 X 50 nS) with respect to the input. In the above figure, the part A shows the input signal, and then below the corresponding output signals of the first multiplexer, if the tap settings are set to 0, 128 and 255. The drawing B shows the output signal with respect to each multiplexer according to figure 1 above assuming all four equalizers are set to 255. If they were all set to 0 then the resulting waveform would be the same but inverted.

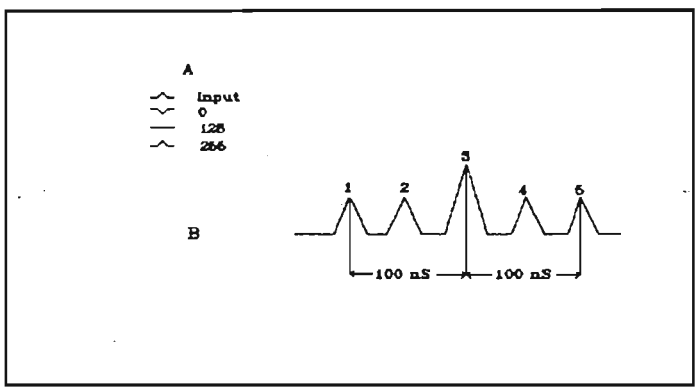

Figure 12: Showing (A) input waveform and (B) output waveform

If we were to do the same thing now with a square wave, having a duration of longer than 50 nS, then referring to the figure below, A represents the input signal, B represents the output if all the taps were set to 0 (high frequency cut) and the wave C represents the tap settings all set to 255 (increasing the high frequency portion).

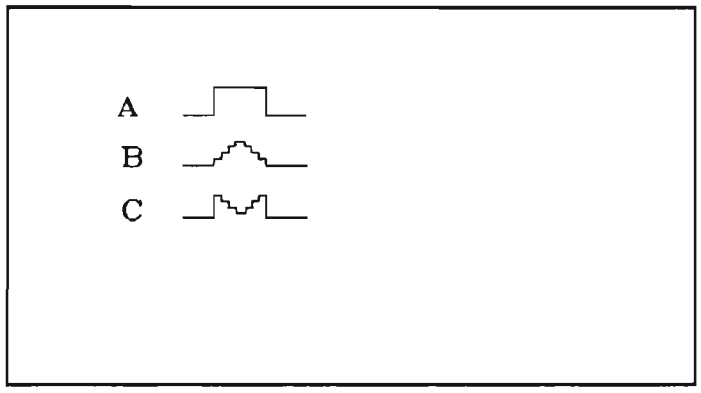

Figure13: Showing the result of adding delayed square waves depending on the tap settings.

Using an old previously recorded tape that has already done more than 500 passes, set the machine to 48 kHz. Play back the tape and observe the eye pattern on the oscilloscope while monitoring on the two pin connector on **A7**. At the same time watch the "DSP 1" and "DSP 2" as well as the error correction indication on the display of the machine. The taps must now be adjusted to have the maximum height and minimum jitter on the cross over points (see Figure 9).
Set all the tap settings to the mid position of 128 using the NADCOM on the "Miscellaneous settings" screen. Start to change the values of the taps in turn in order to get the best eyepattern and the least jitter. Once the values are approaching the correct values, set the control track from its 119 position to a much lower value (for example 89) and then repeat the adjustments for the eye pattern. It can be seen that as the values approach their correct settings the number of errors detected on the DSP 1 and DSP 2 as well as the display of the machine itself fall, and will eventually be zero. Once all the values are correct then press "L" to latch them.

The tap settings at 48 kHz and 44.1 kHz sampling frequencies are almost the same, however 32 kHz are different. Once they are correct at 48 kHz set the sampling frequency of the machine to 32 kHz and pass over all the tap settings using the "TAB" key to update them. (these values are not automatically updated when the sampling frequency is modified).
Proceed in the same manner for the 32 kHz sampling frequency and once the values are correct then latch all of them by pressing "L".
Be sure to reset the control track setting to 119 again.

1.3.5 HALF SPEED CONTROL TRACK ADJUSTMENT

Fit a work tape (blank) onto the machine, and record (inputs 1+2 only) at 48 kHz with the machine running at half speed. Once a section of tape has been recorded, rewind the tape and play it back. Monitor the eye pattern on the oscilloscope and adjust the control track setting in the NADCOM to give a maximum amplitude of the H portion of the signal. The value will certainly be higher than 119 (in high speed), the actual limits for this setting are minimum 170 and maximum is 240. Even if the eyepattern seems to be better outside these limits (above 240), they must not be exceeded under any circumstances otherwise the machine will not be able to lock itself in playback at half speed.

1.3.6 CUE TRACK ADJUSTMENT

Make sure that the machine is set to full speed and that the sampling frequency is set to 48 kHz. Inject a 1 kHz 0 dbm (775 mV) on to the 15 pin miniature "D" type connector on the left-hand side of the machine on pin 8 and put the machine into record mode. Make sure that the cue track lock out selector is in the READY position. Set the headphone output volume control to maximum, and monitor on headphone output. Check that the level on the output is between 1.60 Vrms and 1.65 Vrms with no load. Disconnect the input signal and measure on the oscilloscope on TP 1 of the cue track circuit while the machine is still in record mode. The signal on TP1 is the bias signal, and then adjust RP2 to give a signal of 18 Vpp. Reconnect the 1 kHz input signal and adjust the depth of modulation using RP1 to get 2.5 Vpp. Continue to record 1 kHz for a short while and then switch the input frequency to 6.9 kHz and record about a minute of each frequency at the same recording level.
Play back the recorded sections, and check/adjust if necessary the 1 kHz using a voltmeter as before to 1.6 Vpp using RP 3 and then adjust RP 4 for about -3 dB during the 6.9 kHz section. This adjustment is interactive and will normally be higher than - 3dB, but it depends on the tolerences of the longitudinal head.

NOTE: The potentiometers RP 3 and RP 4 are interactive, if one is modified then recheck the other.

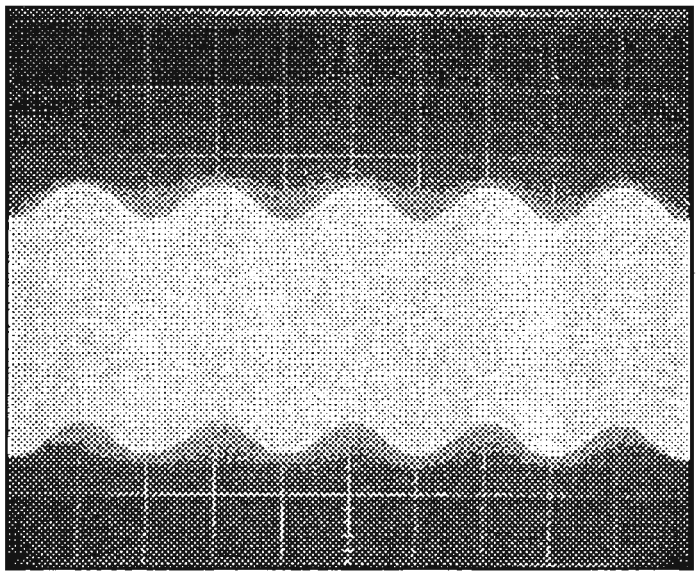

Figure 14: Oscilloscope photograph showing the CUE track signal modulation 1 kHz 0 dB on channel 1

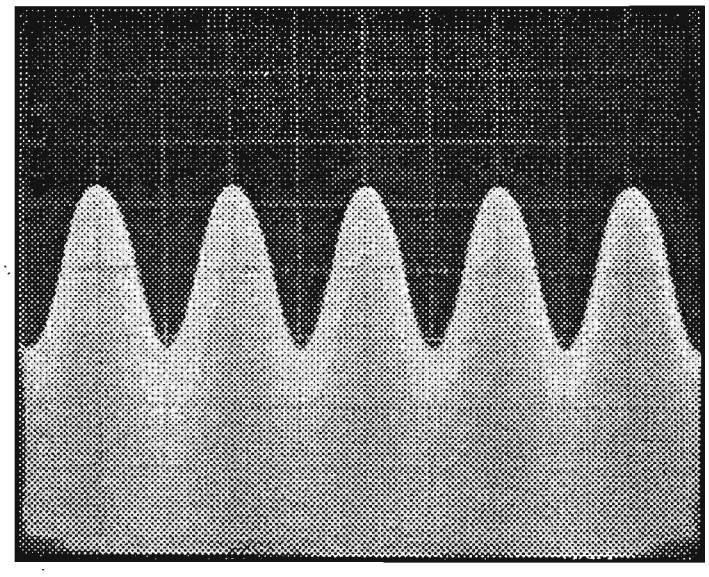

Figure 15: Oscilloscope photograph Showing Cue track modulation depth (2.5Vpp in this case) measured 1V/div on TP 1.

1.4 ELECTRONIC CIRCUITS

9110250000	Keyboard circuit	A3
9110252000	LCD display circuit	A4
9110254000	Scanner and capstan servo circuit	A7
9110255000	Reel motor and pinchwheel carriage servo circuit	A14
9110257000	Deck plate interconnection circuit	B3
9110260000	Capstan motor switching circuit	A11
9110262000	Capstan motor tachometric circuit	A12
9110265000	Reel motor switching circuit	A13
9110270000	Scanner motor switching circuit	A8
9110272000	Scanner motor tachometric circuit	A9
9110274000	Rotary transformer interconnection circuit	B1
9110275000	Digital playback preamplifier	A10
9110277000	Record and equalizer circuit	A5
9110280000	Capstan motor switching circuit Hybrid.	
9110281000	Scanner motor switching circuit Hybrid.	
9110282000	Tape roller and counter circuit	A2
9110284000	Clock extractor circuit	A6
9110288000	Reel motor switching circuit Hybrid.	
9110290000	Tape roller and erase circuit	A1
9110310100	L.F. Audio input circuit (with "T" power filter)	A17
9110314000	L.F. Audio attenuator and filter circuit	A18
9110316000	L.F. Audio output circuit (with switch)	A22
9110316200	L.F. Audio output circuit (wilt potentiometer)	A22
9110320000	A/D and D/A converter circuit 18 bits	A20
9110322000	AES IN/OUT circuit	A19
9110324000	Cue track circuit up to SN 1000175	A16
9110324200	Cue track circuit from SN 1000176	A16
9110330000	Power input and protection circuit	A15
9110360000	Encoder circuit up to SN 1000225 (800 Fs)	A25
9110360100	Encoder circuit from SN 1000226 (400 Fs)	A25
9110362000	Decoder circuit	A26
9110364000	DC to DC converter circuit	A23
9110366000	Central processor circuit	A27
9110368000	Clock generator circuit (800 Fs)	A24
9110368100	Clock generator circuit (400 Fs)	A24
9110368200	Clock generator circuit (400 Fs + VCLO)	A24
9110370000	Time code circuit	A28
9110540000	ND-PCA RS422/232 interface circuit	
9110550000	ND-LA In line input attenuator circuit	

1.5 EPROMS WITHIN THE NAGRA-D

9110360027	Encoder eprom
9110360031	Decoder eprom
9110366010	C.P.U. eprom
9110368011	Clock eprom
9110370010	Time code eprom
5910000286	AES eprom (soldered).

1.6 EQUIPMENT NECESSARY FOR CALIBRATION

Multimeter (type Fluke 75 or similar)
Frequency counter up to 50 MHz
Dual trace oscilloscope (recommended bandwidth 100 MHz or greater)
Reference tape (KSA # XX XXXXX XXX)
Anti-static mat and earthing bracelet
MS-DOS based PC with serial port (minimum 286 processor)
NADCOM software diskette
Kudelski special tool kit.

CHAPTER IV

TIME CODE SECTION

1.0 INTRODUCTION
1.0.1 Time code format

1.1 TIME CODE INSTALLATION

1.2 TIME CODE ADJUSTMENTS
1.2.1 Reference frequency
1.2.2 Record current

1.0 INTRODUCTION

GENERAL

The time code option of the NAGRA-D (ND-TC) is a complete SMPTE / EBU 80 bits longitudinal time code. It is recorded on a specific track using the Manchester BI phase modulation technique. The longitudinal time code track is located along the bottom edge of the tape (see "format" in the instruction manual). The main advantage of having a longitudinal specified time code track is that it can be read at tape speeds other than nominal.
The format of the time code input / output corresponds to the SMPTE/EBU norm and is compatible with other LTC equipment presently available.

1.0.1 Time code format

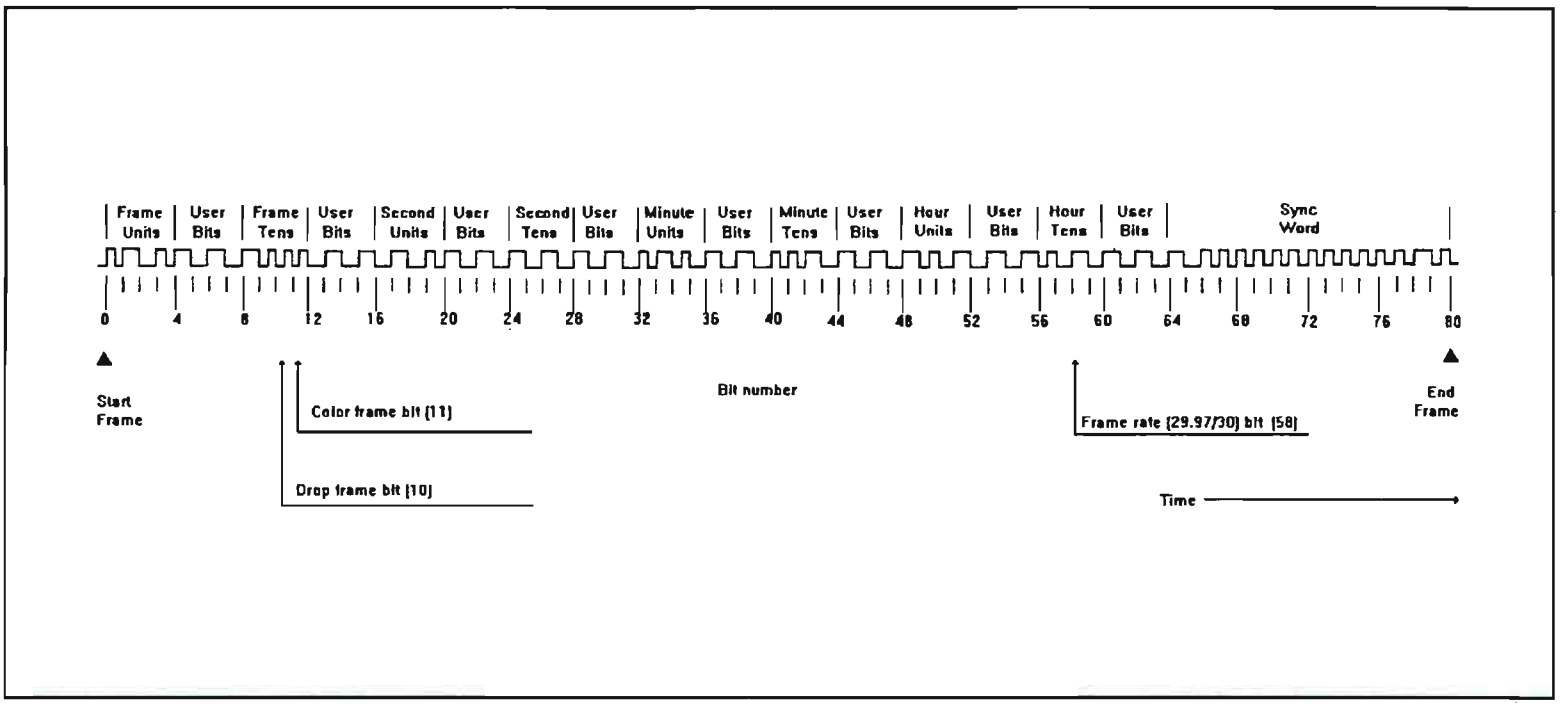

Figure 1: A complete time code word indicating the bits that are used specifically by the NAGRA-D

As indicated above, the bit number 58, which was previously un-assigned, in the time code of the NAGRA-D has been assigned to indicate whether 29.97 or 30 frame time code is being recorded. This allows auto detection of the time code format on the tape. All the other bits in the time code word are according to the normal format. When bit 58 is set to "1" then 30 Frame time code is being used and when it is "0" then 29.97 code is in use.

1.1 TIME CODE INSTALLATION

As the NAGRA-D was designed to be equipped with time code from the outset, installation of the ND-TC option is very simple. Open the bottom of the machine by removing the six screws and install the time code circuit in the space provided using the ribbon cables supplied. The software is already installed in the eprom of the CPU and it will detect that the time code circuit has been installed. Replace the lower cover of the machine and power on.

1.2 TIME CODE ADJUSTMENTS

1.2.1 REFERENCE FREQUENCY

Measure on pin 4 of U4 on the time code circuit A 28 using a frequency counter, and adjust CV 1 also on A28 so as to get the frequency of 4.194304 MHz. exactly.

1.2.2 TIME CODE RECORD CURRENT

Measure on TP 28 while in time code record mode, adjust RP 1 for188mVpp(it is a square wave).
Record 1 minute of time code once this has been adjusted, and monitor on pin 6 of U 16 the time code playback signal and verify that it between 500 mVpp and 1 Vpp. There is no adjustment, but a check.

All other tests of the time code system can be done according to the setting procedures covered in the instruction manual.

CHAPTER V

TECHNICAL INFORMATIONS

MECHANICAL

ELECTRICAL

SOFTWARE

June 1994

TIE

June 1994

TIE	DESCRIPTION	DATE
TIE 10-01	PREVENTION OF TRANSPORT OSCILLATION WHEN LOCATING THE STOP POSITION.	SEPT 1992
TIE 10-02	OPERATION OF NAGRA-D USING AN EXTERNAL DC SUPPLY (BATTERY BELT).	SEPT 1992
TIE 10-03	EXTERNAL SYNCHRONIZATION OF THE CLOCK GEN. WITH A PAL OR NTSC SIGNAL.	NOV 1992
TIE 10-04	SOFTWARE VERSION V 0.66 AND NADFACT FOR P.C	NOV 1992
TIE 10-05	INSTALLATION OF THE TIME CODE OPTION AND EPROMS.	JAN 1993
TIE 10-06	USING THE ALC CIRCUIT TO GUARANTEE A CONSTANT LEVEL ON THE CUE TRACK	JAN 1993
TIE 10-07	PREVENTION OF CROSSTALK ON THE CUE TRACK WHEN USING THE ND-CM CUE MICROPHONE	FEB 1993
TIE 10-08	CHANGING THE CLOCK FREQUENCY FROM 800 Fs TO 400 Fs ON THE CLOCK GENERATOR	FEB 1993
TIE 10-09	PROTECTION OF THE MODULOMETER LAMPS	MAR 1993
TIE 10-10	MODIFICATIONS FOR EE / DIRECT WITHOUT DELAY IN CONJUNCTION WITH THE INSTALLATION OF THE CPU SOFTWARE V1.2	MAY 1993
TIE 10-11	REDUCTION IN THE CUE TRACK OUTPUT LEVEL	NOV 1993
TIE 10-12	SOFTWARE DETECTION OF THE PRESENCE OF THE 14 MHZ VCLO OPTION INSTALLED ON THE CLOCK GENERATOR CIRCUIT.	NOV 1993
TIE 10-13	MODIFICATION OF THE ADJUSTMENT LOOP TO ASSURE NTSC STABILITY, WHEN THE VCLO 14 MHz OPTION IS INSTALLED	NOV 1993
TIE 10-14	INSTALLATION OF THE 20 BIT A/D AND D/A CIRCUIT	NOV 1993
TIE 10-15	INCREASE OF THE HEADPHONE OUTPUT GAIN, FOR CIRCUITS FITTED WITH THE SWITCH	NOV 1993

TIE 10-16	IMPROVEMENT OF CONTROL TRACK PLAYBACK AT HIGH SPEED	JAN 1994
TIE 10-17	REMOVAL OF THE PHASE DIFFERENCE BETWEEN TWO CHANNELS, WITHIN THE SAME A/D CONVERTER	JAN 1994
TIE 10-18	REDUCTION OF TC CROSSTALK WHEN THE CUE TRACK IS IN THE SAFE POSITION	JAN 1994
TIE 10-19	FILTERING OF THE +5V SUPPLY FOR 18 BIT MACHINES	JUL 1994
TIE 10-20	FILTERING OF THE +5V SUPPLY FOR 20 BIT MACHINES	JUL 1994
TIE 10-21	DIL SWITCHES IN THE NAGRA-D	JAN 1995
TIE 10-22	MODIFICATION ENABLING CORRECT MANAGEMENT OF THE INTERNAL BATTERY OF THE NAGRA-D	OCT 1995
TIE 10-23	THIS NUMBER WAS SKIPPED!	
TIE 10-24	MODIFICATION OF THE ND-CCC2 POWER SUPPLY	AVRIL 1996
TIE 10-25	MODIFICATION OF THE ND FOR SAMPLE SYNC OPERATION	SEPT 1996
TIE 10-26	AVOID OCILLATIONS OF THE LEFT TENSIOMETER WHEN USING AMPEX (QUANTEGY) TAPE	SEPT 1996
TIE 10-27	IMPROVEMENT OF THE TRANSPORT REACTION UNDER SONY CONTROL	NOV 1998
TIE 10-28	MODIFICATION OF THE TIME CODE CIRCUIT	JUL 1999
TIE 10-29	MODIFICATION OF THE CUE CIRCUIT	JUL 1999
TIE 10-30	INSTALLATION OF THE 24 BIT A/D CONVERTERS ND-24B INTO A NAGRA-D	NOV 1999
TIE 10-31		

PREVENTION OF TRANSPORT OSCILLATION WHEN LOCATING THE STOP POSITION.

When the machine has been used for a certain period of time and the transport is "run in" it will no longer locate the STOP position. If STOP is pressed when the machine is in FF or REW then the tape will slow down and then oscillate around the STOP position.

This problem has now been repaired in the software. The EPROM that needs to be replaced is the one for the microprocessor. This is the large EPROM number U18 (see diagram) that is located in the top left-hand corner of the machine when looking at the under side.

Ensure that the machine is switched OFF. Carefully unscrew the six securing screws for the bottom plate of the machine (one in each corner (long) and two central (short) screws) and carefully remove the base of the machine.

Remove the EPROM using an eprom puller, and install the new one, version V0.55A being careful to respect its orientation. Pin 1 is in the left-hand lower corner. Refit the base plate of the machine.

This modification is to be made ONLY on machines carrying the following serial numbers:

1000110, 1000112, 1000113, 1000114, 1000115, 1000116, 1000117, 1000118, 1000119, 1000120 and 1000121.

KUDELSKI S.A.
TEL: 021/732 0101
FAX: 021/732 0100

NAGRA

OPERATION OF NAGRA-D USING AN EXTERNAL DC SUPPLY (BATTERY BELT).

IMPORTANT:

Direct powering of the NAGRA-D from an external battery is possible, at the users own risk, under certain circumstances:

First of all, it is imperative that THE INTERNAL BATTERY IS REMOVED from the machine, to avoid blowing the internal fuses of the machine.

It must also be noted that the internal status and setup of the machine is stored in RAM and this information is only kept for a few minutes in the absence of a battery, and will need to be re-entered each time the battery has been disconnected for more than a couple of minutes.
The battery management system will also be inoperative once the internal battery has been removed from the machine.

How to connect an external battery (battery belt):

Open the NAGRA-D by loosening the two screws in front of the main control panel. Lift the cover of the internal battery, and REMOVE THE INTERNAL BATTERY from the machine. Replace the fuse F2 (presently 2 A) by a fuse of 5 A. This fuse is a "resistor fuse" type and is located on the rear interconnection board next to the connector for the internal battery. This modification will allow the use of external DC supplies from 12.5 V to 15 V max. The total additional resistance of the cable, plugs, and external battery must not be greater than 0.15Ω

Kudelski S.A. holds no responsibility for any damage caused to the external battery supply or the NAGRA-D if this modification is made.

KU
TEL: 021/732 0101
FAX: 021/732 0100

EXTERNAL SYNCHRONIZATION OF THE CLOCK GEN. WITH A PAL OR NTSC SIGNAL.

AIM:

This modification needs to be made on all NAGRA-D machines of serial number 1000101 to 1000325 inclusive (except 1000311) so that the internal clocks will be correctly synchronized to the external video reference.

MODIFICATION:

On the CUE track circuit 9110 324 000 (version A) replace the resistance R1 (old value 33 kΩ) by a resistance of 47 kΩ (5460 247 020).

Modify the connection between U1 and U2 according to the instructions and the attached schematic.

In order to gain access to the area to be modified, begin by removing capacitor C2. (this must be replaced afterwards). Lift pin 4 and pin 5 of the IC U1. Link the now lifted pin 5 of U1 to the solder pad of pin 4 which no longer has a pin soldered to it (this track goes to pin 1 of U2). Next link the pin 4 (lifted) of U1 to pin 6 of U1.

Replace the capacitor C2.

KUDELSKI S.A.
TEL: 021/732 0101
FAX: 021/732 0100

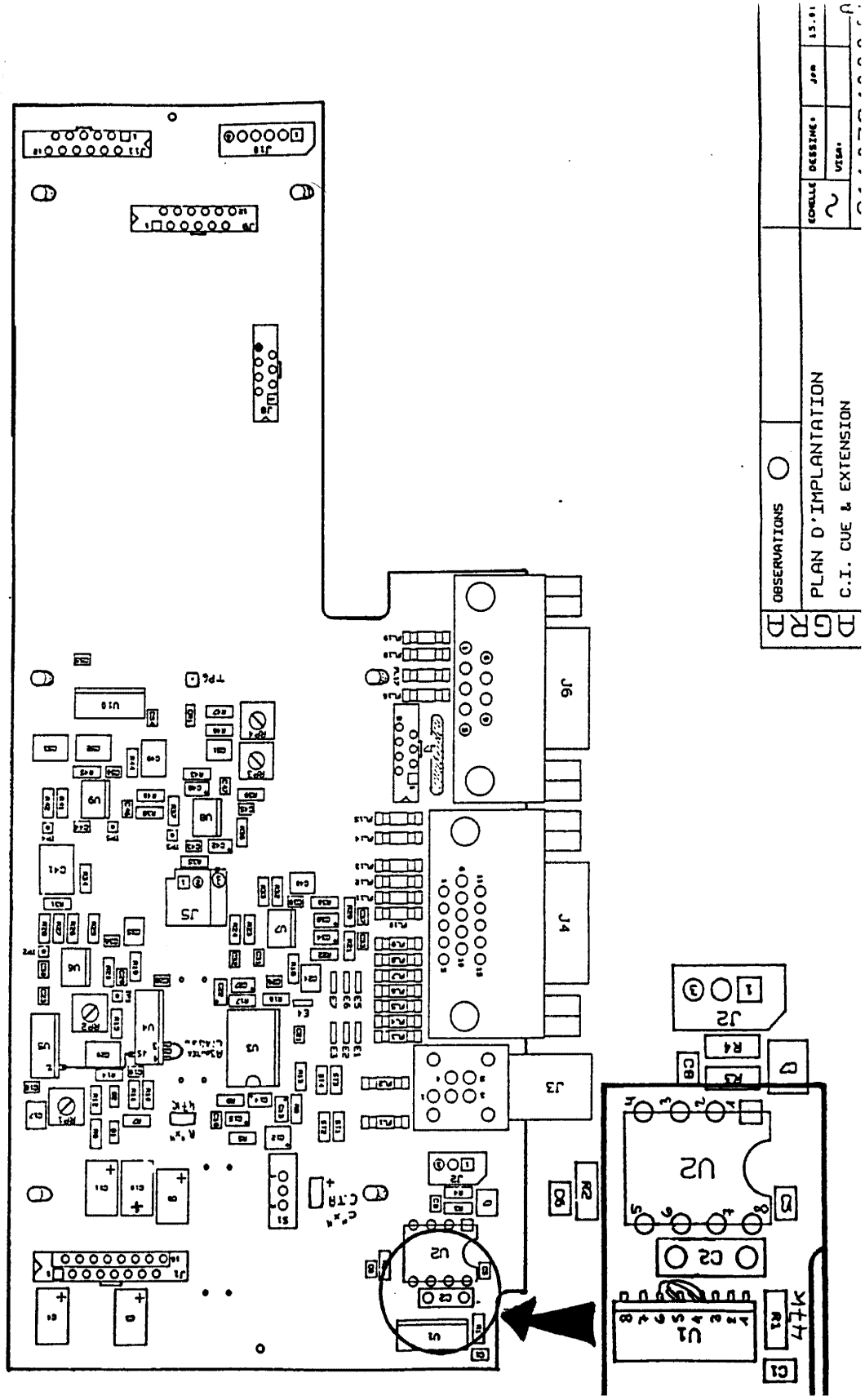

KUDELSKI S.A.
TEL: 021/732 0101
FAX: 021/732 0100

NAGRA

SOFTWARE VERSION V 0.66 AND NADFACT FOR P.C

The software version V 0.66 for the main microprocessor of the NAGRA-D has now been released. This gives many new features to the machine, and greatly increases the number of menu's available on the LCD display.

The software for the PC is no longer the NADTEST. This version is rendered obsolete by installation of this new software. In order for the RS 422 communication to take place then the NADFACT software must be installed, the version of which is the V 0.6. It should also be noted that the NADFACT software is designed to run from the COM2 port by default. If the communication is being made through the COM1 port (as is normally the case on a "laptop") then the program should be launched by typing "NADFACT -PCOM1".

REPLACING THE SOFTWARE IN THE NAGRA-D

Ensure that the machine is switched off. Remove the six screws holding the base of the machine (4 long and 2 short) Remove the main EPROM for the microprocessor using an eprom puller. The software to be replaced is located in the front corner of the machine and is the only eprom with 40 pins.

KUDELSKI S.A.
TEL: 021/732 0101
FAX: 021/732 0100

NAGRA

INSTALLATION OF THE TIME CODE OPTION AND EPROMS.

INSTALLATION OF THE TIME CODE OPTION

The NAGRA-D is pre-wired and fitted with the head allowing the simple installation of the time code option. The time code kit (KSA part # 70 10370 000) consists of the following parts:

1 x	91 10370 000	A28 Main time code circuit
1 x	59 10000 409	W42 ribbon cable
1 x	59 10000 405	W27 ribbon cable
1 x	59 10000 402	W28 ribbon cable
7 x	01 10001 006	Nylon locking nuts

IMPORTANT: The electronic circuits of the NAGRA-D are sensitive to static discharge. Before handling any circuits (or removing circuits) from the machine the operator must be earthed by means of a wrist bracelet, and the machine and its circuits must be placed on a conductive mat.

Remove the six screws holding the base of the machine (4 long and 2 short) and remove the lower cover of the machine. Now loosen the two front deck plate screws and lift the deck until it is locked by the supporting arm. Install one end of the ribbon cable W42 into the connector on the front of the CUE circuit board located on the left of the internal battery (see diagram). To fit a ribbon connector cable, firstly lift the securing levers at each end of the socket mounted on the circuit board, then gently push the ribbon cable into the center of the connector and then firmly close the two levers on the connector. When this is done, carefully push the other end of the ribbon cable under the AES circuit in such a way as it appears at the bottom of the machine. (The AES circuit is the lower of the two transverse circuits across the front of the machine). Install the main time code circuit in the available space underneath the machine as well as the two ribbon connectors W27 and W28 and connect them to their corresponding connectors on the time code circuit. Carefully position the circuit and fix it in place using the 7 nylon nuts provided. The tool used to tighten these is number 71 51817 000.
Once the time code circuit has been correctly installed then power up the machine, and select the display to the TC REC position. The time code numbers should be seen to be counting, this verifies that the circuit is working correctly. (If this is not the case, check that the TC REC SRC is in the INTERNAL mode, and also check that the ribbon cables are correctly installed and all the connectors are firmly closed.

TC drift adjustment:

The adjustment is made on the clock generator pcb.
Remove the encoder and the left decoder on the NAGRA-D, but keep the power supply connected to the encoder (J17, ribbon cable 22).
Solder a resistor decade (resistance bridge network) onto R162 or 163 (47Kohms).
Switch on the NAGRA-D and adjust the value to obtain the smallest drift, while monitoring the frequency of the 14'112'000 Hz. using an accurate frequency counter (tolerance is ± 0.5 Hz). Switch off and replace the decade by a fixed resistor. (typ. values between 2.2MOhms to 470kOms). Re-install the circuits and replace the bottom cover of the machine.

KUDELSKI S.A.
TEL: 021/732 0101
FAX: 021/732 0100

USING THE ALC CIRCUIT TO GUARANTEE A CONSTANT LEVEL ON THE CUE TRACK

To ensure that the CUE track of the NAGRA-D always records at the same level (0dB) even when the audio inputs are well below 0 dB. The following modifications should be made.

On the CUE circuit (A16) 91 10324 000 (version A):
Remove the switch S1 (40 45781 267) and link "Cue switch" to "ND-CM in" by shorting the solder points of S1. Remove the following components:

Capacitor C17 (100nF #54 51410 441)
Capacitor C26 (4.7nF #54 51274 442)
Capacitor C32 (4.7nF #54 51247 442)
Resistor R24 (150kΩ #54 60315 020)

Replace the following components:

Resistor	R13 (old 0Ω)	with a 1k5	(54 60150 020)
Capacitor	C12 (old 4.7µF 10V)	with a 10µF 16V	(59 10000 106)
Resistor	R33 (old 470kΩ)	with a 47kΩ	(54 60247 020)
Resistor	R14 (old 39kΩ)	with a 22 kΩ	(54 60222 020)
Potentiometer	RP3 (old 2kΩ)	with a pot RP 5 kΩ	(59 10000 120)

Add a resistor of 47 kΩ (54 60247 020) between the CUE REC signal (J1-12) and pin 5 of U7, between the solder point on the J1-12 side of the EX-capacitor C17. Now connect the pad 3 (of the removed S1 switch) to the CUE MONITORING.

On the Line output circuit (A22) 91 10316 000 (version B) replace the following components:

Resistor	R45 (old 100kΩ)	with a 56KΩ	(54 60256 020)
Resistor	R48 (old 100kΩ)	with a 56kΩ	(54 60256 020)

(Schematic and layout)

KUDELSKI S.A.
TEL: 021/732 0101
FAX: 021/732 0100

NAGRA

PREVENTION OF CROSSTALK ON THE CUE TRACK WHEN USING THE ND-CM CUE MICROPHONE

When in RECORD, the CUE REC signal is a "1". When the NDCM is connected, this signal changes to a "0" and the cue track goes into PLAY mode, and the crosstalk from the control track and time code track can be heard. This is due to the led in the ND-CM which changes the signal -10V FM to approximately -3V which prevents the CUE REC signal from staying in the "1" position.

Procedure:

Short circuit the "Cue Rec On" and the "Cue Valid" signals and remove the resistance R10 (150 kΩ)

KUDELSKI S.A.
TEL: 021/732 0101
FAX: 021/732 0100

CHANGING THE CLOCK FREQUENCY FROM 800 Fs TO 400 Fs ON THE CLOCK GENERATOR

To change the 800 Fs to 400 Fs on the clock circuit

On the clock generator circuit A24 (91 10368 000)replace the transformer TR3 (800 Fs) (59 10000 164) by the transformer 400 Fs (59 10000 168) This must be done in order to change the Eprom on the clock circuit from version V1.0 to version V 1.1.

On the Encoder circuit A25 (91 10360 000) remove the integrated circuit U33 74 ACT 74 (59 10000 283) and link the solder pads 3 and 5 of the removed U33.

KUDELSKI S.A.
TEL: 021/732 0101
FAX: 021/732 0100

NAGRA

PROTECTION OF THE MODULOMETER LAMPS

The aim of this technical information is to protect the modulometer lamps of the machine by placing a diode across each of them. As the lamps are presently wired in series, if one of the lamps blows, then all the lamps go out. The insertion of the led will not only avoid any possible over voltage of the bulbs during switching on, but also in the event that a bulb is faulty the remaining bulbs will stay alight, and the led of the faulty one will also be alight as an indication of the faulty bulb.

PROCEDURE

Solder a led into the holes along with the existing bulb wires as indicated on the drawing attached. The anodes of the leds must be soldered to the points marked E2, E4, E6, E8, E10 and the cathodes soldered to the points marked E1, E3, E5, E7, E9. There are five leds to be installed.

The leds are as follows:

MV 5374C YELLOW 3x5 KSA P/N 51 66840 261

(1 Circuit lay-out)

KUDELSKI S.A.
TEL: 021/732 0101
FAX: 021/732 0100

NAGRA

MODIFICATIONS FOR EE / DIRECT WITHOUT DELAY IN CONJUNCTION WITH THE INSTALLATION OF THE CPU SOFTWARE V1.2

AIM:

In order for the machine to have an EE / DIRECT feature without the processing delay, it is necessary to install the eprom version V1.02 for the CPU circuit, as well as a new eprom V 1.2 for the AES board and three wires need to be added. The eprom on the AES circuit is soldered to the circuit. If the NAGRA-D is fitted with the ND-TC time code option then the time code eprom must be V1.01.

PROCEDURE:

Open the machine, remove the AES circuit which is located inside the top half of the machine, below the A/D D/A circuit (A 20) in the front of the machine. According to the attached schematics, replace the eprom U9 (59 10000 286) with the new version number V1.2.

Add three connection wires between U16 and U20 as follows:

Link pin 9 of U20 to pin 77 of U16
Link pin 10 of U20 to pin 76 of U16
Link pin 11 of U20 to pin 75 of U16

Replace the AES circuit and the A/D D/A circuits.

Finally replace the CPU eprom in the bottom of the machine for the new version V1.02.

(1 Layout)

KUDELSKI S.A.
TEL: 021/732 0101
FAX: 021/732 0100

NAGRA

REDUCTION IN THE CUE TRACK OUTPUT LEVEL

AIM:

To prevent the output level being too high when the machine switches automatically from the normal digital playback to the cue track when the tape is no longer at nominal speed. This modification is to be implemented on all circuits 9110316100 revision A and 9110316200 (potentiometer version) fitted in machines having the Cue circuit 9110324100 and 9110324200 version A (with ALC).

PROCEDURE:

On the Audio LF, AES and phones circuit A22 (9110316100 revision A) replace R 45 and R 48 (old value 220 kOhm) by a 680 kOhm number 5460368030, according to the attached lay-out.

(1 Lay-out)

KUDELSKI S.A.
TEL: 021/732 0101
FAX: 021/732 0100

SOFTWARE DETECTION OF THE PRESENCE OF THE 14 MHZ VCLO OPTION INSTALLED ON THE CLOCK GENERATOR CIRCUIT.

AIM:

To allow the software of the CPU to detect, and hence display the required menus, the presence of the VCLO option on the clock generator circuit A24. Only circuit boards 9110368100 version B have the available space to allow the VCLO option 9110369000 version A to be installed. Once the VCLO option has been fitted to the circuit, the circuit inherits the number 9110368200 and the following modification must be done:

PROCEDURE:

Carefully lift pin 2 (gnd) of the integrated circuit U22. Link the lifted pin (pin 2) to pin 16 of U22 (+5V) (or to the +5V side of the Capacitor C 92. According to the attached schematic).

Note: The installation of the VCLO option requires the CPU software 1.03 or higher

(1 schematic and 1 lay-out)

KUDELSKI S.A.
TEL: 021/732 0101
FAX: 021/732 0100

NAGRA

MODIFICATION OF THE ADJUSTMENT LOOP TO ASSURE NTSC STABILITY WHEN THE VCLO 14 MHz OPTION IS INSTALLED

AIM:

To avoid an instability in the clock frequency adjustment loop when the 14 MHz VCLO option and the internal 1.75 MHz VCLO are working together.
This is only necessary in machines working in NTSC.

PROCEDURE:

On the clock generator circuit A24 number 9110368100 revision B and 9110368200 revision A, remove the following resistors and replace them:

R 162 (old value 22 kOhm) replace with 47 kOhm number 5460247020
R 184 (old value 12 kOhm) replace with 39 kOhm number 5460239020
R 185 (old value 33 kOhm) replace with 100 kOhm number 5460310020

See attached schematics.

KUDELSKI S.A.
TEL: 021/732 0101
FAX: 021/732 0100

NAGRA

INSTALLATION OF THE 20 BIT A/D AND D/A CIRCUIT AND EPROM VERSION 1.04 OR HIGHER

AIM:

In order to install the 20 bit A/D and D/A circuit on machines presently fitted with the 18 bit circuit certain small modifications need to be performed.

PROCEDURE:

Place the machine on an anti-static working mat, connected to ground and connect the wrist bracelet before removing any circuits from the machine.

On A19 (91 10322 000) AES circuit link U16 pin 7 to J4 pin 7 using a short piece of wire. Remove C2 (47µF) in the +5V line of the AES circuit.

On the Audio Attenuator Low Frequency and Filter circuit (A18) remove C18 (47µF).
Replace the converter circuit with the 20 bit board.

Install the software 1.04 (or higher) which also includes the Directories and the correct indication for the overload leds necessary for the 20 bits board. In order for this software version to be installed C52 on A7 Scanner and Capstan Servo board 91 10254 000 must be removed.
Once C52 on A7 has been removed, connect an oscilloscope to TP 15 on A7 and adjust RP 2 so as to measure 4Vpp (control track level) with the NAGRA-D in playback mode.

See attached schematics.

KUDELSKI S.A.
TEL: 021/732 0101
FAX: 021/732 0100

INCREASE OF THE HEADPHONE OUTPUT GAINFOR CIRCUITS FITTED WITH THE SWITCH

AIM:

To increase the output level of the headphone amplifier on machines that are fitted with the circuit A22 version B with the switchable level control S1.

PROCEDURE:

Replace the resistors R5 and R24 which are presently 3.3 kOhms by 6.8 kOhms resistors part number 5460168020.

KUDELSKI S.A.
TEL: 021/732 0101
FAX: 021/732 0100

IMPROVEMENT OF CONTROL TRACK PLAYBACK AT HIGH SPEED

AIM:

When the NAGRA-D is fitted with the software version 1.05 the machine needs to be able to read the control track at high speed in order to locate the directory position etc on the tape. In order to increase the control track playback at high speed a low pass filtering capacitor needs to be removed.

PROCEDURE:

On the Scanner and Capstan Servo circuit A7 (91 10254 000 version A and version B) remove capacitor C 52 (present value 220 pF)

The capacitor is located in the same place on both of the versions of the circuit. See attached lay out.

KUDELSKI S.A.
TEL: 021/732 0101
FAX: 021/732 0100

NAGRA

REMOVAL OF THE PHASE DIFFERENCE BETWEEN TWO CHANNELS WITHIN THE SAME A/D CONVERTER

AIM:

With the 20 bits A/D converter circuits there is a very small time shift (1 sample) between the two channels sharing the same converter.

PROCEDURE:

On the A/D converter circuit A20 91 10321 000 version A remove the connection wires that connect the negative end of the capacitors C130, C131, C 132 and C133 to U16 and U22.
Link, using new longer wires, the following:

The negative pole of C130 to the lifted pin 13 of U16
The negative pole of C131 to the lifted pin 4 of U16
The negative pole of C133 to the lifted pin 13 of U22
The negative pole of C132 to the lifted pin 4 of U22

Remove the two jumpers (wires) between pins 20 and 22 of U18 and pins 20 and 22 of U20

KUDELSKI S.A.
TEL: 021/732 0101
FAX: 021/732 0100

NAGRA

REDUCTION OF TC CROSSTALK WHEN THE CUE TRACK IS IN THE SAFE POSITION

AIM:

To remove crosstalk of time code (during record) through the CUE track on the headphone output of the NAGRA-D when the CUE channel selector switch is in the SAFE position. This modification is valid for the circuit fitted with a potentiometer as well as for those fitted with the switch.

PROCEDURE:

On the circuit A22 91 10316 200 version A (equipped with a potentiometer) and on 91 10316 000 (version B) and 91 10316 100 (version A) both fitted with the switch level selector, replace the two resistors R 45 and R 48 (both 680 kΩ) by 0Ω jumpers. (KSA N? 54 60800 030)

Cut the track coming from pin 12 of J1 next to the through plated hole (on the component side of the board) according to the drawing on the following page. Add a 330 kΩ resistor (54 60333 020) on the solder side of the connector (scrape the track near the through plated hole) and the pin 12 of connector J1 according to the drawing below.

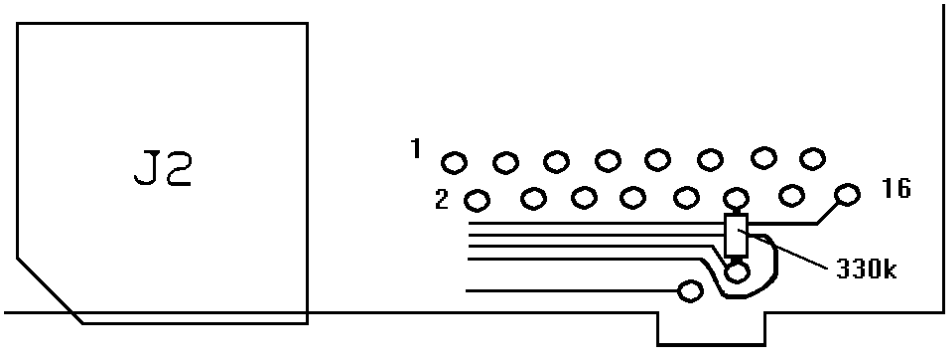

KUDELSKI S.A.
TEL: 021/732 0101
FAX: 021/732 0100

FILTERING OF THE +5V SUPPLY FOR 18 BIT MACHINES

AIM:

To improve the filtering of the 5V line (30 dB) and to reduce the voltage drop (approx 0.15V). This modification should be performed when a machine is returned for update or repair. It is not necessary to recall all the machines in order to install this modification.

PROCEDURE

On the circuit 9110320000 Version B and Version A (18 bits) add a piggy-back # P1607 on the + 5V line, according to the attached schematics.

Remove the capacitor C 64 (22µF 20V) and the coil L4. Fix the piggy-back to the circuit by means of a small piece of double sided sticky tape. according to the attached drawing.

Connect the +5V from the piggy-back to the connection of L4 (by C65)
Connect the +5VA from the piggy-back to the connection of L4 (by C76)
Connect the earth (GND) from the piggy-back to -VE end of C73
Connect the +15V from the piggy-back to the +VE end of C61.

Replace the shielding 0110001014 with a modified shielding number 0110001019.

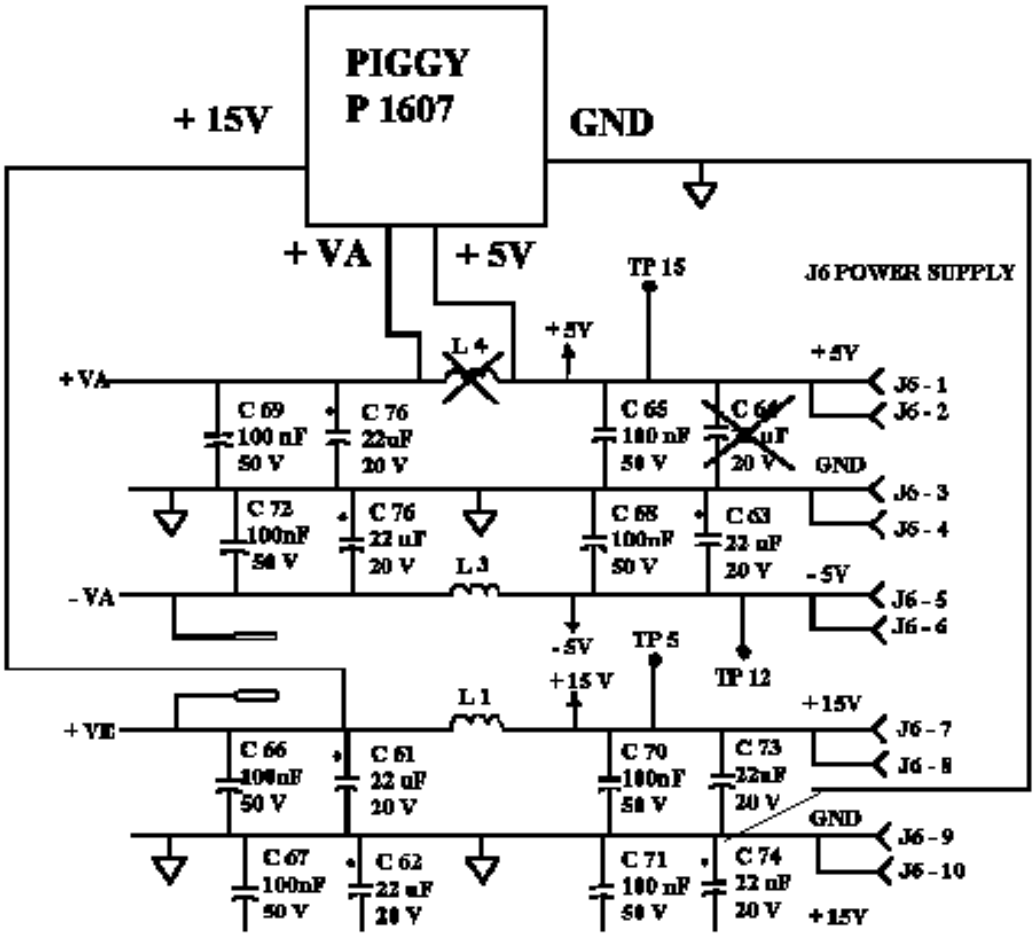

KUDELSKI S.A.
TEL: 021/732 0101
FAX: 021/732 0100

NAGRA

FILTERING OF THE +5V SUPPLY FOR 20 BIT MACHINES

AIM:

To improve the filtering of the 5V line. This modification should be performed when a machine is returned for update or repair. It is not necessary to recall all the machines in order to install this modification.

PROCEDURE

On the circuit 9110321000 Version A (20 bits) add a 180kΩ resistance in parallel with R25 (120kΩ)
The filtering is improved from -10 dB to -20 dB but the voltage drop will increase from 0.2V to 0.3V. Cut the two tracks which link pin 16 of U10 to the through plated hole (+5V) and the other at the positive end of C56. Once these two tracks have been cut, link, using a piece of wire, U10 pin 16 to the end of C56 (which is no longer connected to the +5V) and then to the positive end of C19 (+VA).

According to the schematic.

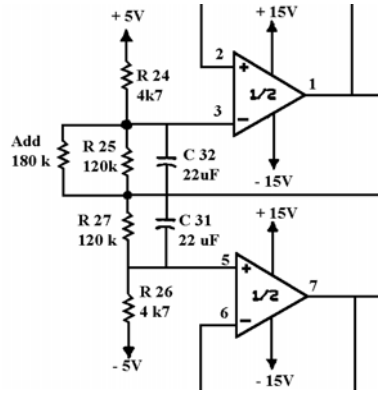

Add the 180kΩ resistor as shown.

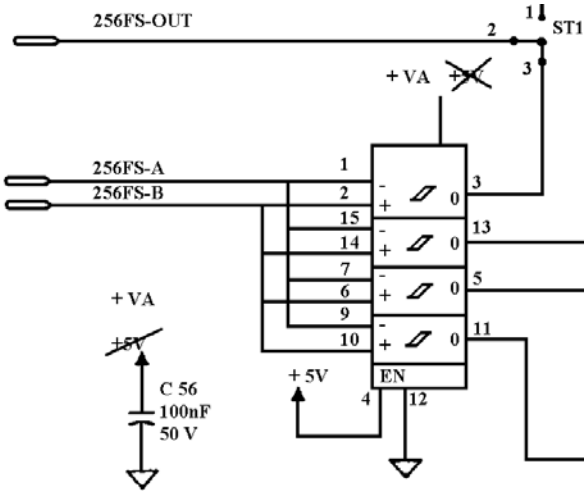

Remove the connection to the +5V and connect to the + AV according to the schematic.

KUDELSKI S.A.
TEL: 021/732 0101
FAX: 021/732 0100

DIL SWITCHES IN THE NAGRA-D

AIM:

To avoid confusion and to provide a quick reference sheet regarding the use of the DIL switches located inside the NAGRA-D on the Audio L.F. Attenuator circuit A18.

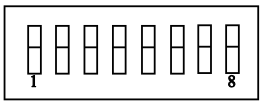

DIL #	Function when in the ON position
1	**Record Inhibit** - Nothing can be recorded onto the tape. This includes the tape directory.
2	**Setting Inhibit** - The present settings of the machine in the menu mode can not be modified with the exception of the display selection and messages.
3	**Tape Format Menu** - The tape format menu of the time code selection will appear in the MENU mode.
4	**Lock Play** - The machine will switch to PLAY as soon as it is locked in the chase mode.
5	**Gen Out** - The internal generator is sent to the time code output whenever the machine is in the STOP mode.
6	Not presently used.
7	Not presently used.
8	**Run In** - Factory use only.

KUDELSKI S.A.
TEL: 021/732 0101
FAX: 021/732 0100

Modification enabling correct management of the internal battery of the NAGRA-D.

Without this modification, the indication of the BAT % counter in the menu of the NAGRA-D is incorrect, as the µprocessor of the NAGRA-D is unable to differentiate between current coming from the external or internal bettery. This modification allows the actual state of the internal battery to be indicated in the same manner as a machine not using the ND-AP option.

Improvement in the operation of the ND-AP option

The use of higher performance VMOS linked with the reduction in the track resistance of the PCB enables the drop in voltage from 0.36V to 0.06V on the connector of the ND-AP. This gives not only a more efficient use of the power but also better management of the Ext / Int switching. On the option ND-AP # 70 10230 000 a wire needs to be added. The wire should be 300mm long approx #42 08 719 999. One end should be stripped and tinned with a soldering iron and the other end must be stripped and a connection pin (#40 20160 014) clamped to it. Solder the open end of the wire to the point E5 on the auto-power circuit and then put the contact into the position of the pin 6 of the connector J6.

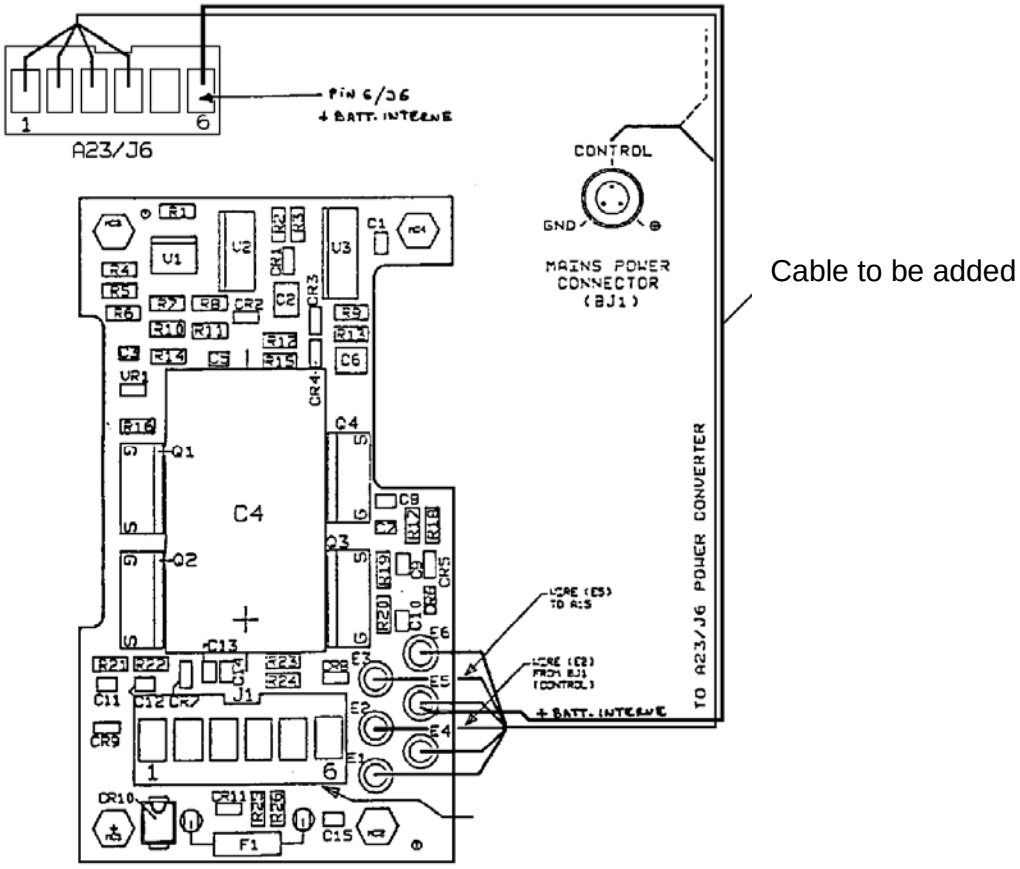

KUDELSKI SA 1033-CHESEAUX
TEL 021/732-0101
FAX 021/732-0100

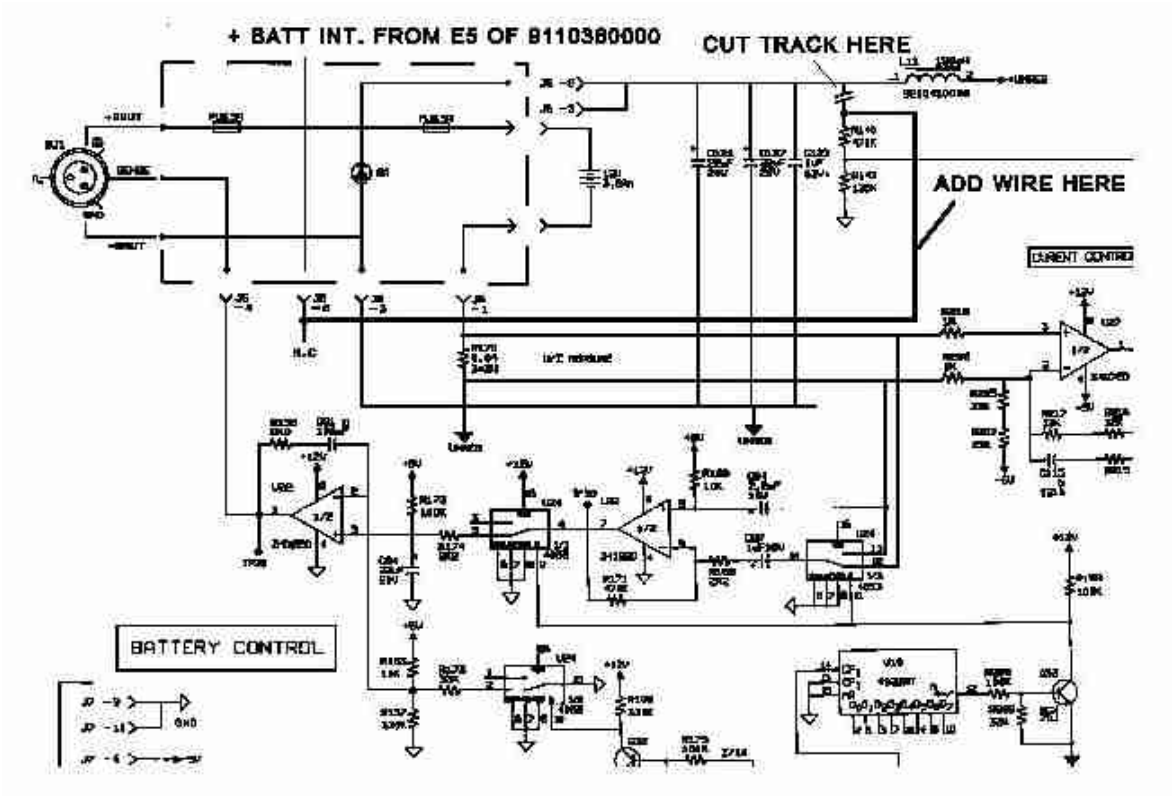

This modification requires a modification to the DC/DC converter circuit A23 #91 10364 000. Cut the track which links R140 (470 kΩ) with pin 5 of the connector J6 (+ve supply to the converter). Link R140 to pin 6 of J6 using a small length of wire.

KUDELSKI SA 1033-CHESEAUX
TEL 021/732-0101
FAX 021/732-0100

LAY-OUT OF A23 SHOWING CONNECTOR J6

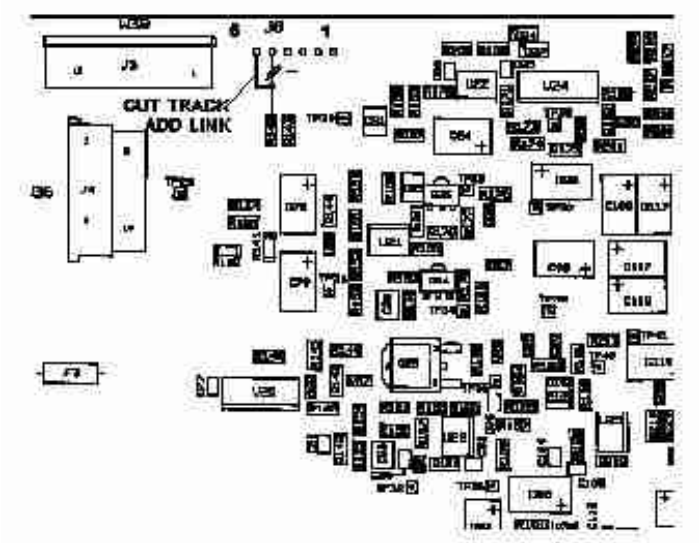

RECOMMENDATION

If possible, make sure that the cable that is used between the external battery and the NAGRA-D has a cross section as large as possible. Also avoid using a cable that is too long.

Maximum length 80cm and minimum cross section 0.75mm^2 (# 70 10231 000)

KUDELSKI SA 1033-CHESEAUX
TEL 021/732-0101
FAX 021/732-0100

This number was skipped!

Go directly to TIE 10-24.

Modification of the ND-CCC2 power supply

Aim: To reduce the heating up of the chargers and to protect them better against fluctuations in the mains supply voltage.

Procedure

On the circuit 91 10750 000, replace the resistance R9 by a 3.3Ω part # 55 42183 833 (old value 120Ω). Replace the thermistor CTN type VE 2400251 K by the thermistor Thomson VE 24M02750 K.

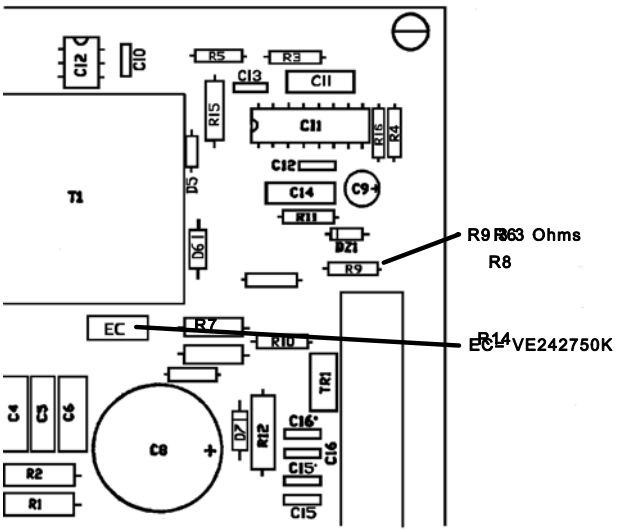

KUDELSKI SA 1033-CHESEAUX
TEL 021/732-0101
FAX 021/732-0100

Modification of the ND for SAMPLE SYNC operation

Aim: Addition of a “piggy” and the wiring modifications to allow two or more NAGRA-D’s to be connected together during Record and Play to allow multi-channel operation.

This bulletin applies to machines carrying serial number lower than 1000901, if the machine is required to use the sample sync option included in the software version V2.00 for the CPU and is only applicable to machines equipped with the ND-TC time code option and eprom V 2.00 TC.

Procedure:

CLOCK CIRCUIT

On the clock circuit 91 10368 100, install the “piggy” # P1622 according to the attached lay-out. Make sure that the connection wire used is enamelled (included with the “piggy“ board). For this option to be operational the clock circuit must also have the eprom version 2.0 installed. There are two different eproms depending on the clock circuit that is installed and the eprom type desired must be specified when ordering the software. One is for the circuit 800 FS (generally machines with serial number lower than 1000501) and the other is for machines equipped with the 400 FS board (machines carrying serial number 100501 and higher).

CUE CIRCUIT

On the cue circuit # 91 10324 200 link the pin4 of connector J4 (presently SPARE) to pin 8 of J7 (presently NC) according to the schematic.

On the cue circuit 91 10324 200 revision {A} this link must be made between the solder point E3 and pin 8 of J7.
On the cue circuit 91 10324 000 revision {A} and 91 10324 100 revision {A} this link must be made between the solder point E7 and pin 8 of J7.

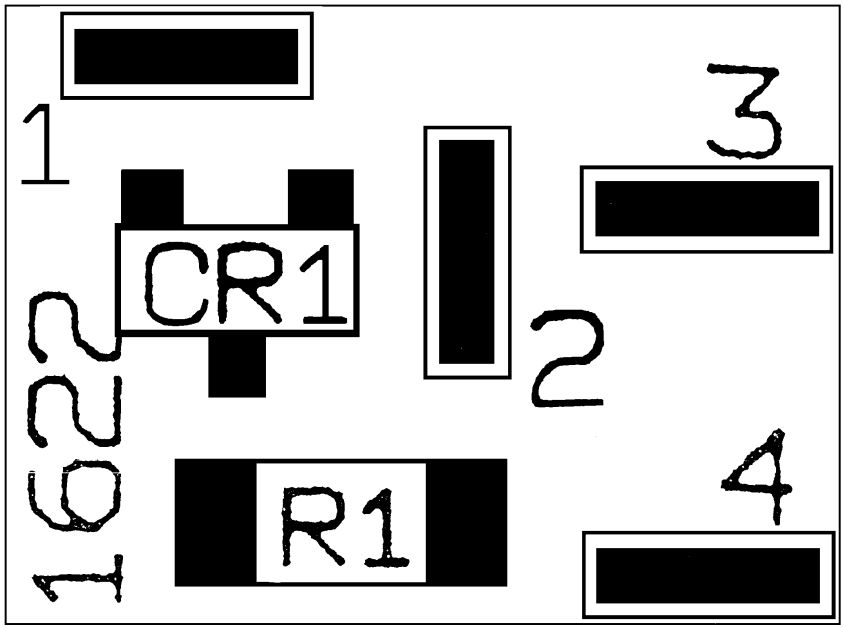

Connection 1 : +5V coming from R196
Connection 2 : Connect to TP 35
Connection 3 : Ground Connect to C111
Connection 4 : Sample Sync OUT connect to J3 pin 8

HOW TO DETECT IF THE CLOCK CIRCUIT IS A 800 FS OR 400 FS VERSION

There are two different methods, the first is to check the EPROM version on the clock circuit 91 10368 100. If the version is V1.0 then the circuit is an 800 FS circuit. If the version is V1.1 then the circuit is a 400 FS. The second (and easier) method to see is to check whether U33 on the encoder circuit 91 10360 000. This IC is located between the two PGA's U19 and U21. If the IC is installed then the clock circuit is an 800 FS if it is not installed then the clock circuit is a 400 FS circuit.

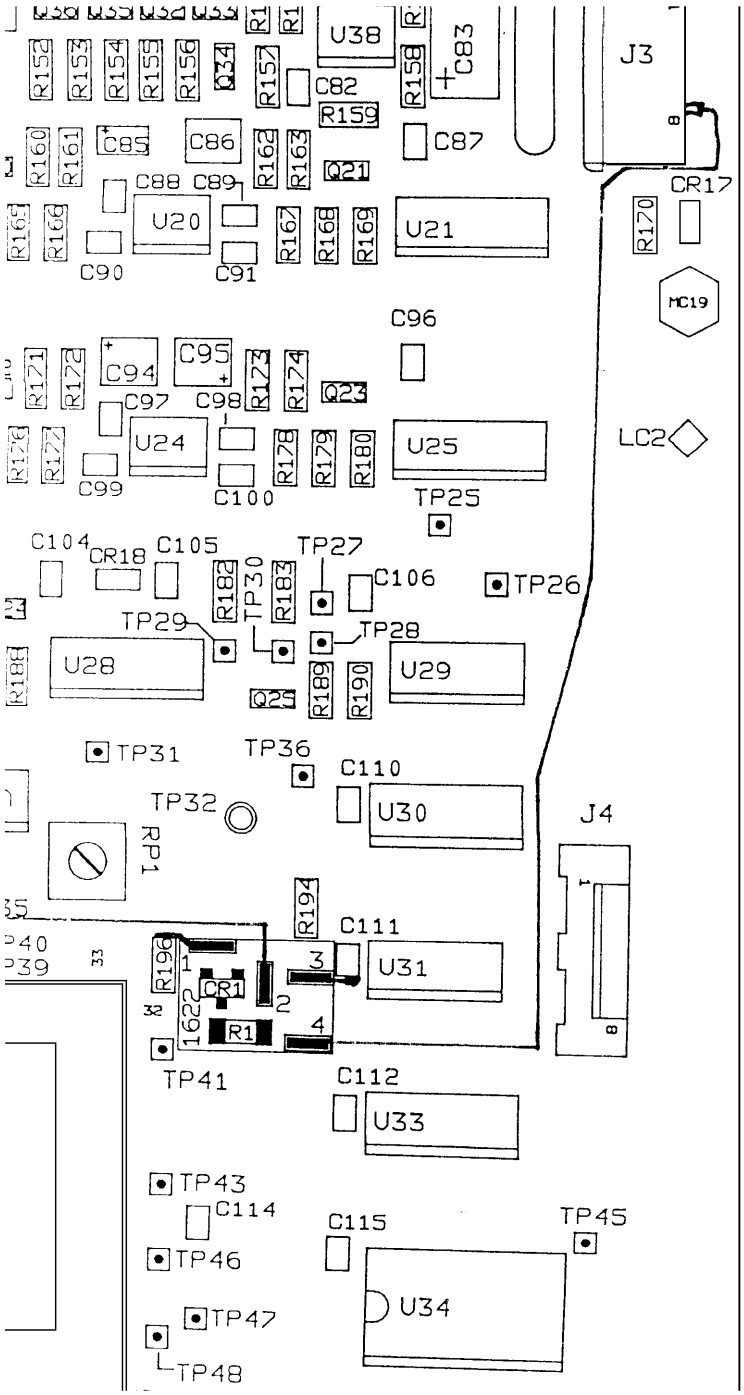

AVOID OCILLATIONS OF THE LEFT TENSIOMETER WHEN USING AMPEX (QUANTEGY) TAPE

Aim: To avoid the rapid oscillations of the left tension roller, at the end of a 5” reel, which has been noticed when using the new AMPEX (QUANTEGY) 467 tape manufactured in Alabama, which does not appear when using the old AMPEX version manufactured in Redwood City. The difference in the tape formulation can cause the left tension roller to go into a high speed oscillation which causes distortion of the tracks on the tape to such a point that the tape is unreadable afterwards.

Application:

This modification applies to all machines carrying serial numbers below 1000800 with the EXCEPTION of the following serial numbers which are already modified: 324, 407, 410, 508, 711 to 725. It is possible that some other machines have already been modified.

Procedure:

On the Reel motor Servo circuit A14 #91 10255 000 place a 220 nF capacitor in parallel with C23 (100 nF). If there are already two capacitors one above the other then the modification has already been performed. If only the 100 nF is installed then add the 220 nF.
The other component to be modified is R 54 which may be either 390 kOhms or 820 kOhms. In either case replace this resistor with a 330 kOhms. Please refer to the attached lay-out for the location of the two components.

KUDELSKI SA 1033-CHESEAUX
TEL 021/732-0101
FAX 021/732-0100

IMPROVEMENT OF THE TRANSPORT REACTION UNDER SONY CONTROL

Aim:

To stabilise the capstan motor of the NAGRA–D during the passage from PLAY to CHASE during the synchronisation process under the SONY RS 422 control protocol.

Procedure:

On the Capstan Motor Converter board A23 remover two capacitors C 102 and C 103 (both 1µF) and replace them by a single capacitor of 4.7nF.

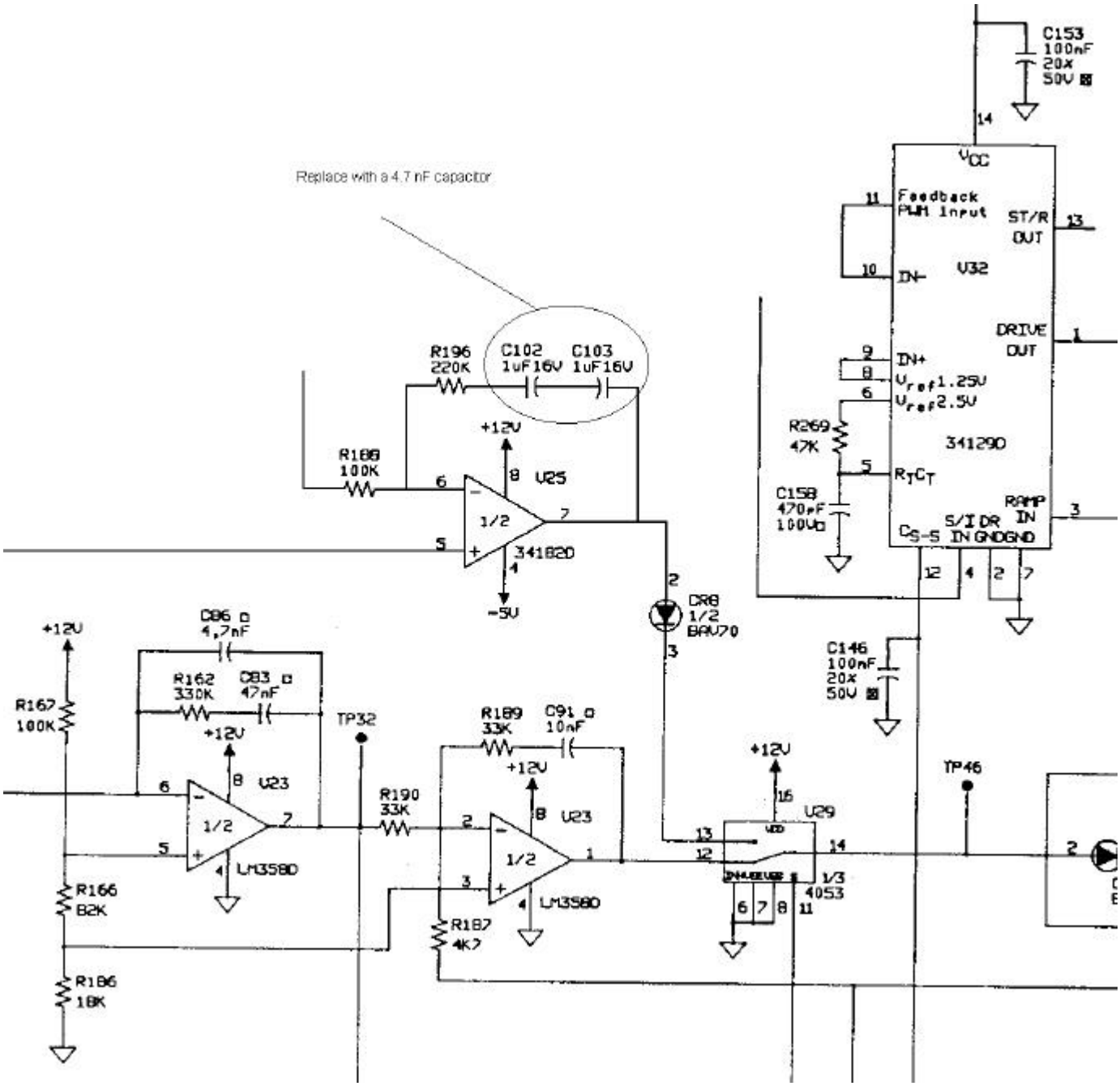

KUDELSKI S.A.
TEL: 021/732 0101
FAX: 021/732 0100

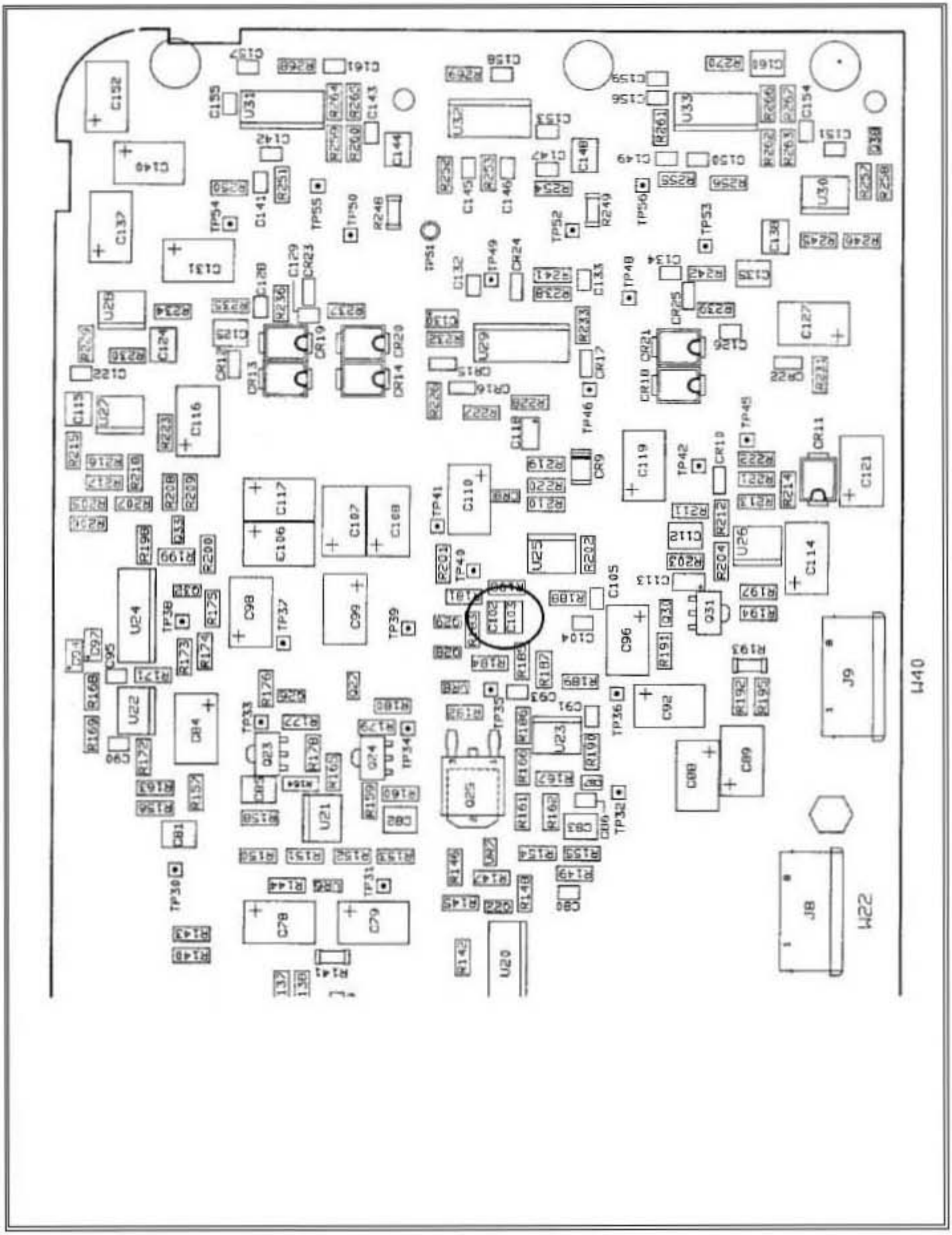

KUDELSKI S.A.
TEL: 021/732 0101
FAX: 021/732 0100

NAGRA

IMODIFICATION OF THE TIME CODE CIRCUIT

Aim:

On some NAGRA-D machines the internal time code generator will stop counting shortly after the power of the machine is turned off. This occurs because some of the crystals stop oscillating when the super capacitor drops below 4V. Other crystals will continue to operate below this value. This modification will lower the voltage cut-off to 3.5V. This modification will already be installed on all machines with a serial number higher than 10001025 delivered from the factory.

Procedure:

On the time code circuit A28 (91 10370 000) replace the resistor R3 (currently 2.7 k?) by a 470 ? K.S.A. part number 54 60047 020 according to the schematic below.

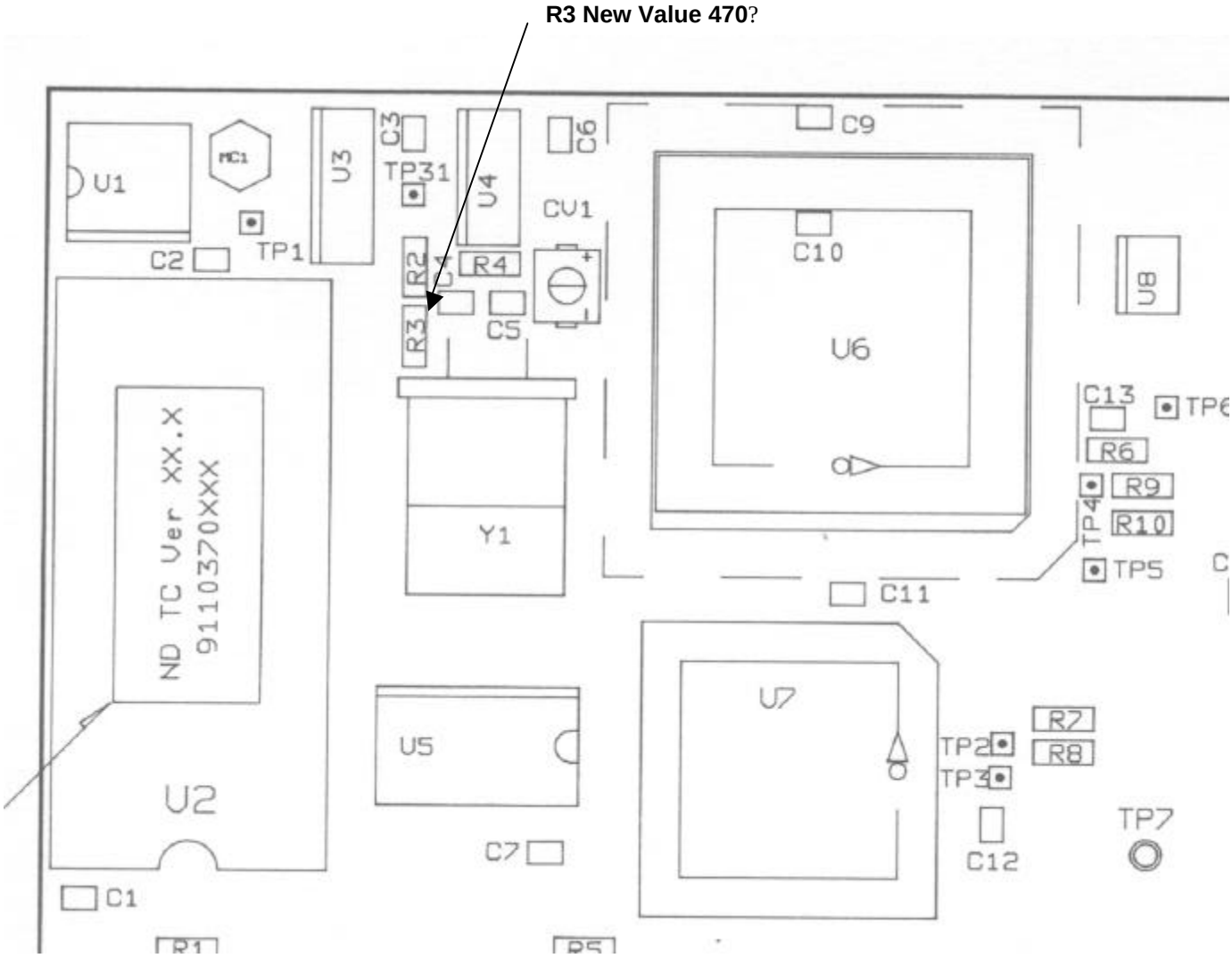

KUDELSKI S.A.
TEL: 021/732 0101
FAX: 021/732 0100

IMODIFICATION OF THE CUE CIRCUIT

Aim:

As the NAGRA-D II machine is fitted with individual time code/cue and control track heads it is now possible to record the cue track during the playback mode. If the new cue circuit is installed in a NAGRA-D with a single longitudinal head, this feature must be disabled.

Procedure:

If the CUE circuit number 91 10324 000 (B) is installed in a NAGRA-D with a single longitudinal head then the 0? jumper resistor R60 must be removed. See lay out below.

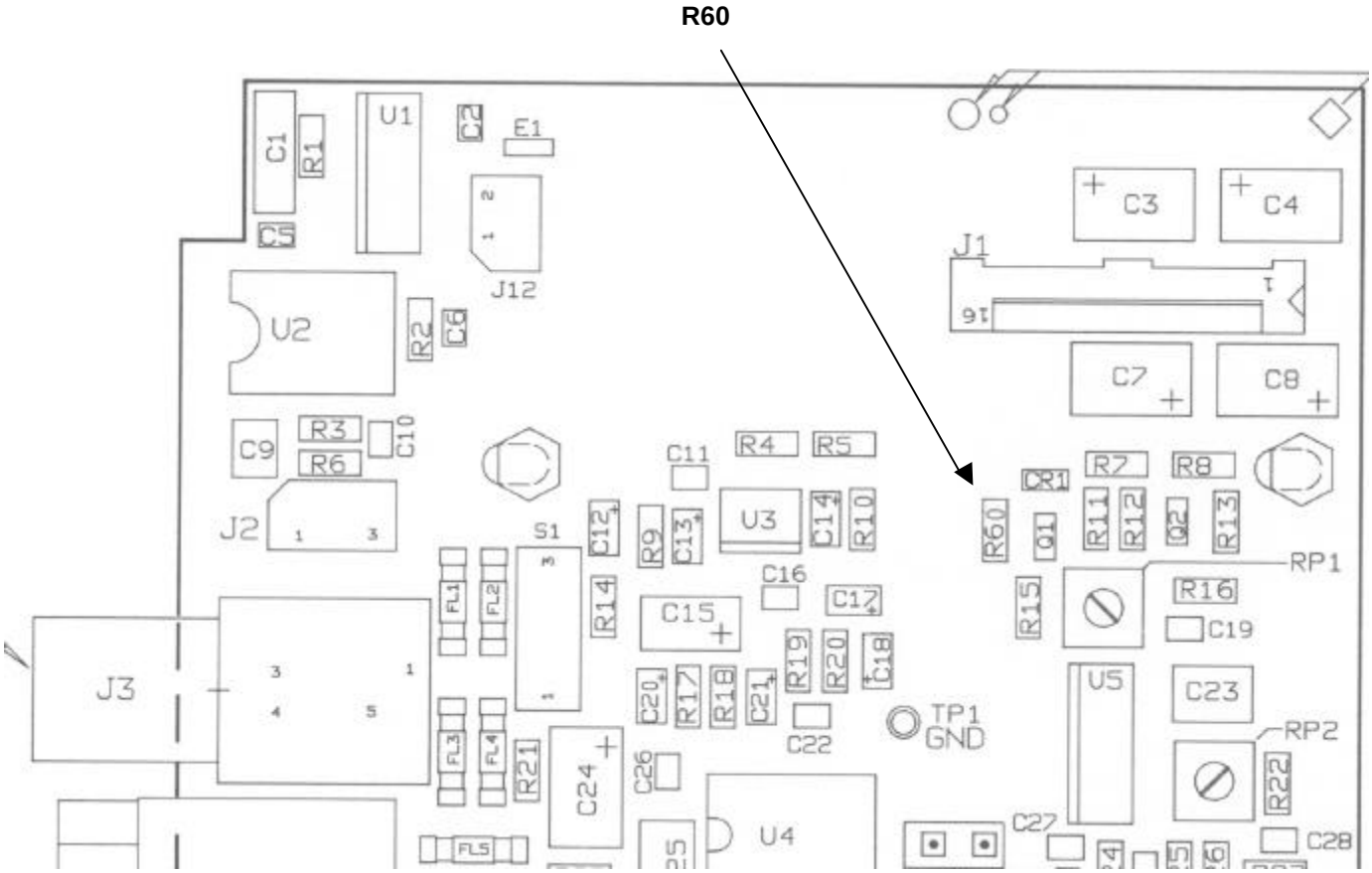

KUDELSKI S.A.
TEL: 021/732 0101
FAX: 021/732 0100

INSTALLATION OF THE 24 BIT A/D CONVERTERS ND-24B INTO A NAGRA-D

Aim: This Technical information sheet covers the installation of the option ND-24B 24bit A/D and D/A converters into a NAGRA-D. It includes the modifications necessary in order to get the best possible performance from the machine.

Kit: The ND-24B kit (#10328) contains the following items:

91 10327 000	24 bits A/D D/A circuit
91 10326 000	AES circuit
91 10366 030	Eprom (Version 3.xx or higher) for the CPU circuit
91 10370 030	Eprom (Version 3.xx or higher) for the Time code circuit
01.10001.007	Metal locking nuts (5 pieces)
	Two short pieces of insulated wire (approximately 4 cm in length)
	Two solder tags to be fitted to each wire
	Two pieces of heat-shrink sleeving

Note: If the machine to be modified already contains the correct version of time code or CPU software then this eprom need not be replaced.

Procedure:

Fit an earth wrist bracelet to avoid any damage from static discharge when handling circuits of the NAGRA-D
Open the NAGRA-D and disconnect the internal battery. Remove the bottom cover of the machine by removing the six screws and replace both the time code and CPU eproms paying careful attention to their orientation.

IMPORTANT **If the new converters are installed with a C.P.U. eprom version lower than version V3.xx the A/D converters WILL be damaged permanently**.

Once the eproms have been changed, replace the bottom cover of the machine, and tighten the six fastening screws. Open the top deck of the NAGRA-D and remove the “L” shaped shielding from the box of the machine. Also remove the shielding located between the inputs circuit and the A/D board.
Disconnect the flat ribbon connectors from the A/D circuit and remove the securing nuts. Remove the A/D D/A circuit from the machine. Now unscrew the support pillars and locking nuts, and disconnect the flat ribbon cables from the AES circuit which is located under the A/D D/A circuit in the front lower part of the machine, and remove the AES circuit from the machine.

On certain machines, the metal spacers were glued and the earth connection is not good across these pillars. As a result we must add additional earth points using some wire and solder tags (supplied) and replace the plastic nuts with metal ones.(also supplied).
Fix the wires with the solder tags according to the drawing below on to the A/D circuit under the metal nuts.
On the LF and filters circuit (mounted vertically along the front edge of the machine)solder the wires according to the drawing, and scrape the tracks with a sharp instrument to remove the insulation and expose the track for soldering. The wires will be soldered slightly differently according to the version of the circuit. In any case it is important that the wires are soldered to a reliable earth track. (See Fig 1)

Install the new AES circuit in the reverse order of the above making sure that the ribbon connectors are correctly inserted and clamped shut. Then fit the new A/D D/A circuit and connect the flat ribbon cables. Replace the shields and reconnect the internal battery.
When power on is pressed, the display will indicate PASSWORD?, the password for the machine can now be entered using the arrow keys (Password must be obtained from KSA). When EXE is pressed the machine will emit 5 beeps and the message MEM LOST will be shown on the main display.

NAGRAVISION S.A.
TEL: 021/732 0101
FAX: 021/732 0100

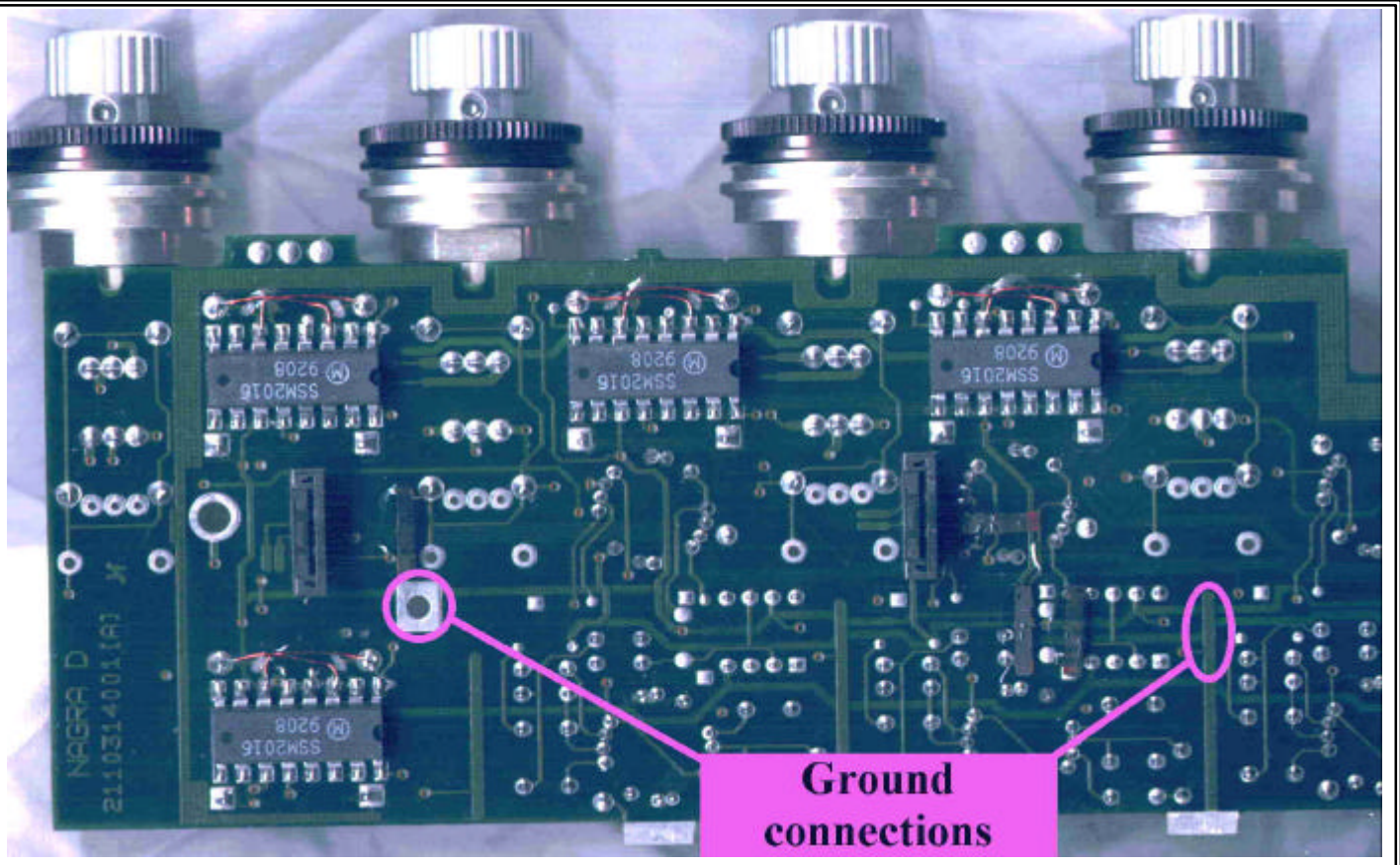

Fig 1 Showing the two earthing points for the A/D D/A circuit on the LF board.

ADJUSTMENTS:

Connect a 775 mV signal to the input and turn the level pot fully clockwise (+3dB position) and make sure that the fader pot is in the CAL position. Then adjust the potentiometers to give the correct AES output level on each channel of –3dBFS. The pots are as follows:

CH1	RP6
CH2	RP5
CH3	RP8
CH4	RP7

Now feed an AES signal (FF) to the input and adjust the analogue outputs for 4.4V using the following pots:

CH1	RP2
CH2	RP4
CH3	RP3
CH4	RP1

See figure 2 for the location of the various adjustment pots

NAGRAVISION S.A.
TEL: 021/732 0101
FAX: 021/732 0100

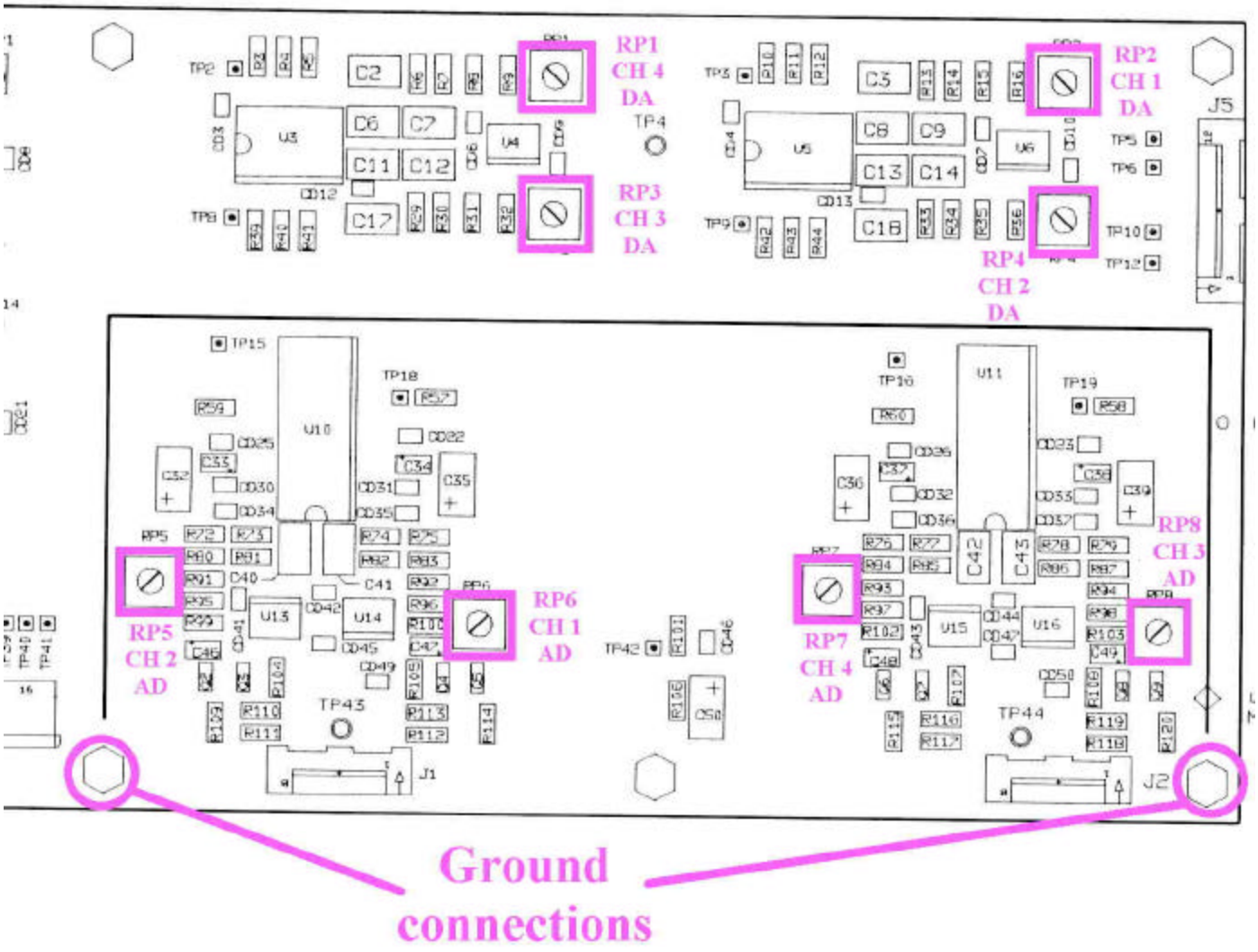

Fig 2 showing the various adjustment pots.

NAGRAVISION S.A.
TEL: 021/732 0101
FAX: 021/732 0100

TIS

June 1994

Official Software Bulletin for NAGRA-D

Version 2.00 (for C.P.U. and time code circuits) dated 12/07/96

- This version is protected by a password which is dependent on the serial number of the machine. Without this password the machine will operate normally except the scanner will not turn. Once this has been entered it is stored in the memory of the machine and never needs to be re-entered.

- Correction of a bug in the directory mode, if a CRASH assemble occurs and the machine had been turned OFF after the previous record command, then the machine would put a tape ident of “No Dir” and this take would not be located by the SKIP commands.

- Correction of a bug: The “Recording source” in the auxiliary data of the tracks was always noted as ANALOG despite the actual source.

- Reset of the A/D converters is now implemented 4 seconds after power up of the machine, once all the power supplies have stabilised, in order to improve the residual offset.

- A new menu “ALL CAL” has been implemented in the fader assign menu.

- Time code: The set user bits now takes the DATE mode into account.

- A new menu “ABS TIME” has been implemented. It indicates in the same way as the TAKE display except the time indicated is from the start of the tape and not the start of the take.

- Search (± 4x): This feature is kept if the ① or ⓪ keys are pressed briefly. Re-pressing the key will pass to 8x and vice versa.

- Addition of the battery reserve into the SCROLL display.

- The battery reserve is automatically set to 100% if the capacity setting of the battery is changed.

- Tracking: The R.F. level is now indicated on the fourth modulometer, and the potentiometer acts in a linear fashion in this mode and not in a relative mode - if the pot is not turned the tracking remains constant.

- Increase of the pre-roll to 4 seconds in the half-speed in order to be more certain with assemble record. The pre-roll at full speed remains at 3 seconds.

- Reel numbers: Can now go up to 999 (previously 9)

- The reel number to be put onto the NEXT formatted tape can now be programmed with the new menu “FORMAT NB”. This value is automatically incremented each time a new tape if formatted.

- REC + REW command: Will start the machine in record mode without incrementing the take number, in the directory mode the old (previous) take number is replaced, in directory OFF mode then the relative time counter will restart from zero.

- Possibility of putting a Write Protect command in the directory of a tape to avoid the tape being recorded on. This is done with the new menu “WRITE PROT”. This mode prevents any recording on the tape including the directory. The tape is only protected if the directory has been read i.e. in DIR OFF mode the tape is not protected.

- Possibility to read the take number even in the DIR OFF mode. The take number can always be displayed in either REC or PLAY but only when the tape is being read if DIR OFF is selected. If the tape is not moving in the DIR OFF mode then the take number on the display is replaced by “XX”

- Possibility to record up to 999 takes. In the directory only 99 takes will be recorded as before, and from take number 100 the machine behaves as in the DIR OFF mode. Thus the take number is only indicated in record or playback and the display will flash to warn that the data will not be stored in the directory. In all cases, the last TRACK number is recorded in the directory even if this is beyond take n°99 so that the GOTO END function will still work beyond take 99. SKIP functions however are not possible above take 99. When takes 100 and above are displayed the hours digit of the display becomes a “+” sign in front of the minutes digits due to lack of space to display all the digits.

- The saturation (overload) is now recorded on each helical track. It is set to 0dB for AES inputs, -1.16 dB if machines are fitted with the 20 A/D converter (Hardware option N°1=0) and set to -0.013 for machines with the 18 bit A/D converter (Hardware option N°1=1). For old recordings that were made before the information was recorded on each track, the level is set to the -1.16 dB position and likewise, newly recorded tapes read on machines with an older version of software that cannot interpret this data, will also overload at -1.16 dB.

- The ND-HSF 96 kHz option has been implemented. The machine can be set to 96 kHz, 88.2 kHz or 64 kHz modes which allows these sampling frequencies to be recorded providing external A/D converters are used. In this mode the analog inputs cannot be selected. When one of the above sampling frequencies is selected the machine is automatically set to INPUTS AES. In this mode the AES 1-2 becomes left channel and fader pot n°1 and modulometer n°1 are activated and AES 3-4 becomes right channel and fader pot n°3 and modulometer n°3 are activated. The remaining fader pots and modulometers (2 and 4) are inactive. Equally the monitoring is on channel 1 = left and channel 3 is right. It must be noted that the monitoring, and the analog outputs of the machine still operate at the normal sampling frequencies (one sample out of two) and cannot be used as there will be alaising problems. External High Sampling D/A converters must be used to correctly interpret the signals. The sampling frequency being used is recorded on each helical track (for the FLAG 1 operation on the display), however this data can only be read by machines fitted with version 2.00 or higher. This information is also written in the directory, however the NADCOM software (still version 1.6) cannot interpret them either and will only display half the frequency (96 kHz = 48 kHz on NADCOM etc.) The internal reference generator is operational in these modes. It operates at half the selected sampling frequency but the samples are repeated (doubled).

- The MIRROR COPY feature allows a complete or partial tape to be copied.
  Preparation:

  Connect the AES outputs of the MASTER NAGRA-D to the AES inputs of the SLAVE (destination) machine. (Only 1+2 are necessary if the recording is half speed).
  Connect the two 9-pin RS422 connectors together by means of the special RS 422 cable ND-RSC (KSA N° 10905)
  Connect the time code connectors of the two machines together using a QCTC cable (KSA N° 16908)

  BEWARE: The READY / SAFE and ASSEMBLE / INSERT selectors of the destination machine need to be set to the correct position depending on the type of copy to be performed. However the INS / ASS MUST be set to the ASS position but either 1+2 or 3+4 can be set to SAFE if desired.

Load a new tape on to the destination machine and FORMAT it in the normal way
Place the MASTER tape on the master machine and position it at the point the copy is to be made from. This would be at the end of the directory (before TAKE 1) if the entire tape is to be copied.
Start the copy in the new menu COPY of the MASTER machine by pressing EXE when START is on the display. All the rest is automatic.
If the FADE SRC. or the PHASE SRC. Of the MASTER machine are not in the tape position, then the message ALT FADER (Alternative fader) will be displayed. Press EXE to confirm this is the desired setting.
During the MIRROR COPY operation, the slave machine is synchronised to the master machine. The source machine starts by verifying the entire configuration of the slave (destination) machine and changing the settings where necessary. The automatic machine configurations / tests are as follows:

Checks RS 422 communication with slave machine (if incorrect NO RS 422 is displayed).
Checks that the destination machine has software version 2.00 or higher. (if not message NO RS 422 is displayed)
Checks that the destination machine is not set to INSERT. (If it is then INS. ERR. Will be displayed).
Checks that the speed of the destination machine is the same as the master machine. (if not then the message WRONG SPD. will be displayed)
Sets the destination machine to the same sampling frequency as the master.
Sets the REF FREQ of the destination to AES 1-2 at the correct frequency.
Sets the time code input delay to AES.
Sets the destination machine to the same time code frame rate.
Sets the destination machine to REC.SRC External for the time code.
Fader positions of the MASTER machine are set to CAL
Forces the TAPE/AUTO/EE setting of the master machine to TAPE
Sets the Phase Source and Fade Source of the destination machine to RS 422.

During the copy process the RS 422 port will transmit the auxiliary track information (Channel source, sampling frequency, overload levels) as well as the fader positions to the destination machine upon each rotation of the scanner. The master machine sends the CAL signal for the faders and it is the fader pots of the destination machine which are operational during the copy to activate a fade or phase change if desired.
If time code is not being copied, then the sampling frequency of the original recording need not be respected. That means that a tape recorded at 32 kHz sampling frequency can be mirror copied at 48 kHz to save time.

Four different configurations can be imagined when making a mirror copy:

A. Master is with directory and destination also has a directory.
The title and the reel number is sent to the destination machine at the start of the first take to be copied. The date / Time of the recording, the original recording source and the sampling frequency of the original recording are all transmitted to the destination machine. All other information is generated by the destination machine.

B. Master is with directory and destination is without a directory.
Only the auxiliary track information is transmitted from the master machine to the destination machine.

C. Master is without directory and destination is without a directory.
Only the auxiliary track information is transmitted from the master machine to the destination machine.

D. Master is without directory and the destination is with a directory.
The track information is extracted from the master machine to re-create a new directory on the destination machine. These are: Date and Time of the recording, the recording source and the sampling frequency.

Note that the time and date in the auxiliary track data on the copy will always be that of the recorder machine.

The copy can be stopped at any time by pressing STOP on the master machine. Any settings that were changed in the destination machine are not reset to their previous positions after the copy. If the copy is interrupted (NO RS 422) during the copy process, then the destination machine will stay in a “bizarre” state. It must be turned OFF and ON again to reset it.

The copy will stop automatically after the last recorded track if the master has a directory or if there is more than 5 seconds without an R.F. signal on the master tape which does not have a directory. Any takes of less than 1 second long will be ignored during the copy process.

- The TEMPLATE settings that can be stored have been completed. A 5th template has been installed as a new menu WAKE-UP and is the same as a “Store 5” command. These settings will become the chosen DEFAULT settings of the owner of the machine and will be recalled after a MEM LOST. **ORIGINAL FACTORY SETTINGS WILL BE LOST** if this position is programmed.

- Track searching has been improved during SKIP functions etc. The correct track will be located even if there is no RF signal directly before it.

- ASSEMBLE time code has been implemented. The new position ASSEMBLE is located in the REC.SRC. menu, and if selected the time code will always try to assemble. In the case of a CRASH RECORD the time code will be either the last value read from the tape (or roller updated) which will be used. The USER BITS are also assembled and incremented if the user mode is set to INC user bits. When setting the generator the value is frozen in the internal generator waiting for the recording to start (the RTC of the machine is not affected) the user bits are updated according to the selected mode (DATE / FREE) with the values of the RTC and are equally frozen. At this moment they can be modified using the SET USER command. (This will alter the RTC user bits). When in DATE MODE select FREE RUN in the REC MODE in order to have the correct date with respect to the RTC. The assemble has a precision of one bit (< 500 μs).

- SAMPLE SYNCHRONIZATION has also been installed. This allows two (or more) machines to be synchronised together to sample accuracy (< 20μs). For this to be operational the clock board must have an Eprom version PCLK 2.00. There is a new menu SAM.SYNC. in the REF FREQ menu. This new feature allows the slave machines to synchronize themselves to the L/R EXT (Pin 6 on the 15 pole Extension connector) delivered by the master machine (pin 4 on the 15 pole Extension connector). During the recording process the slave(s) must record the master machines time code (REC. SRC. Set to TC EXT). If the Synchronization is lost at any time then the alarm led will flash and the slave machine will re-synchronise automatically as soon as its reference re-appears except during record where the machine will wait for the end of the recording to re-synchronise. (this is to avoid a “hole” of about 1 second during synchronisation). During playback, the slave machine must be in chase mode (Sync. Ref. TC with offset 0). If an offset other than 0 is needed then the sample sync mode must not be used.

NOTE: The VAR CLK. / FIX CLK position is ignored. The machine is forced to FIX clock operation during the sample sync operation. In addition the variable speed ± 10% cannot be used.

- Correction of a bug in the offset calculation (the bits were not at zero) in SYNC INC mode which caused problems with external controllers (editors) when operating on the SONY protocol with reference Frame Pulse.

- Synchronisation (chase) has been improved to make it faster.

SOFTWARE BULLETIN FOR SOFTWARE VERSION 2.10 FOR NAGRA-D

The installation of the software version V2.10 requires the time code software version V3.02 on the time code board. In order to install the software version V2.10 an 8 digit password needs to be entered on the keyboard of the machine. Please contact KSA for the password corresponding to your machine serial number.

- The display of FULL SPD and HALF SPD has been replaced by 4 and 2 TRACKS respectively.

- The display flags (Int. TC, Video ref. etc.) are always displayed even when in the MENU mode, which was not the case with previous versions.

- A new mode “DISPLAY 2” has been introduced. This menu is located to the right of the principle display menu and allows the operator to display any of the display modes when the EXE key is pressed.

  Note: For the time code (TC OUT and TC REC) either the TIME or USER portion can be chosen for the display. For the principle display this mode is not kept in memory after power off to avoid confusion. (a frozen time code – USER bits causes a panic). However for the second display this mode is remembered.

- The time code DELAY input is now selected automatically according to the selection of the audio inputs. This is not done if one of the inputs is set to analogue and the other to AES, in which case the user needs to decide.

- The RS 422 menu is now present on all machines. It allows the port to be placed in the SLAVE or MASTER position to allow the control of (or to be controlled by) another machine. The commands that are sent by the MASTER machine are RECORD, STOP, SCANNER READY and RECORD PREVIOUS (REC + REW) and these will be understood by another NAGRA-D or and ARES-C machine. If a command is not accepted by the second machine then "No RS 422"will be displayed on the master machine. The NAGRA-D must be in the SLAVE position (default) for the NADCOM software to operate.

- Modification to the SONY remote control protocol. The speed commands are more precise which necessitates a modification (TIE 10-27) as well as the activation of a CALIBRATE menu. This needs to be performed only once.

- Under the SONY protocol the STOP command from the editor is interpreted as PAUSE and the tape will remain in contact with the scanner.

- The last time code value read from the tape (TC REP) is now memorised when the machine is powered off.

- Previously the NAGRA-D went to PARK as soon as the external reference disappeared when the machine is in the CHASE mode. Now the machine will continue to search to the last time code that was received before selecting PARK.

SOFTWARE BULLETIN FOR THE SOFTWARE VERSION V3.00 FOR THE NAGRA-D AND NAGRA-DII

The installation of this software is protected by a password.
The time code eprom compatible with this version for the CPU remains the version V 3.02.

WARNING: **This version was created to take into account the 24 bit A/D converters. If this A/D converter is used with a previous version of software, the A/D converters will be damaged.**

New Features

- This software supports the 24/96 A/D and D/A converter board (ND-24B) and the corresponding AES circuit. These circuits are detected automatically.
- In order for the 96 / 88.2 kHz options to be activated the machine must have the software password ND-HSF activated.
- Once the new boards have been detected a new menu “AES mode” will appear in the Otherset menu. This menu allows the operator to choose “1 Wire” or “2 Wires” for the Input and Outputs independently. These settings are active only when 96k or 88.2 are selected. In 32, 44.1 and 48 kHz mode they are ignored.In the 1 WIRE position the both channels of the AES signal at 96 or 88.2 are sent down a single AES wire. In this mode the AES 1-2 is used, the input AES 3-4 is ignored.
- The outputs AES 1-2 and AES 3-4 give the same signals (ie AES 3-4 is a copy of AES 1-2). The 2 Wires mode is known as “dual AES” which uses the AES signal according to the original norms (limited to 48 kHz). In this mode, 96 / 88.2 kHz are sent as only one channel per AES cable, for both the input and the output. AES 1-2 corresponds to the left channel and AES 3-4 corresponds to the right channel.
- When the new boards are detected, then the REF FREQ menu will automatically be updated with 4 new positions (AES12-96, AES 12-88, REM. 96 and REM 88.2) which allow the machine to be synchronized to incoming AES signals and word clocks.
- The sampling frequency of 64 kHz (2 x 32 kHz) has been removed.
- In the 96 / 88.2 mode the right channel is now managed (fader, phase, modulometer, leds….)by channel 2 on the machine (not channel 3 as with previous versions). This is also the case for original NAGRA-D machines which are not fitted with the new A/D converters. The overloads are now noted for channel 2 in the directory and not under channel 3.
- The menu TAPE SPD. Has been returned from 2 track / 4 track to the original HALF / FULL SPD, due to the double sampling frequency possibilities. Referring to “tracks” is confusing for the user in this mode.
- The display flag “LOCK” has been removed. The “LOCK” status is indicated by the three green leds (FF, REW and PLAY) being alight permanently during chase mode.
- New timings introduced to compensate for the different distances introduced by the installation of the individual longitudinal heads for time code and cue / control tracks.
- A new menu “Rst Hold” in the Otherset menu has been introduced. It has two positions “NEVER” and “RECORD”, and controld the reset hold of the modulometers and the ECC settings. In the NEVER position, the reset is the same as before, ie the switch HOLD MAX / LEVEL / RESET must be used manually. In the RECORD position the values will be reset automatically each time a new take is created in the RECORD mode. In this mode the manual method is also operational.
- A new ALARM indication has been introduced, which will indicate an error on the AES. The ALARM led will light permanently (or for sporadic periods) if a synchronization error between the AES signal and the machine occurs (Slipped sample). Only the selected inputs are measured, irrespective of the position of the ready/safe selectors. This ALARM had not been introduced

previously due to a weakness in the AES chip where it was unable to detect all the AES errors. With the arrival of 96 / 88.2 it is much easier to make a mistake (and very difficult to detect) and we have decided to install the alarm anyway as the most obvious errors will be detected.

- The MIRROR COPY function operates in the same manner as before except BOTH machines need to be fitted with the version V3.00 and the recorder machine must also be equipped with the ND-HSF option. If either of these is not the case then the message “Ver. Error” will appear.
  A copy can be made at any sampling frequency with two exceptions: If time code is being copied then the sampling frequency must be respected. If a double frequency recording is being copied (88.2 / 96 kHz) the machines must be set to double frequency. Likewise a single frequency copy must be made in single frequency position otherwise the errors and overload indications will not be managed correctly.
- On the NAGRA D-II the tape directory is read with the tape engaged on the scanner, and is slightly faster than the previous manner. This is possible due to the new scanner and rotary guides.

J.OWENS
09.09.99

SOFTWARE BULLETIN C.P.U. VERSION V3.02 FOR NAGRA-D

The software V3.02 for the C.P.U. of the NAGRA-D has been introduced principally for the NAGRA-DII machines. The time code version remains V3.02 as before.

A 60g tape tension menu has been added to the OTHERSET menu to allow the tape tension to be increased in order to improve the tape handling of QUANTEGY 467 tape on the NAGRA D-II. This is necessary because the reduced tape tension on the NAGRA-DII due to the new rotating scanner guides means that the more flexible Quantegy 467 tape does not pass across the scanner correctly. This position should be selected when QUANTEGY 467 is being used on the NAGRA-DII. This is not necessary on the NAGRA –D (serial number lower than 1001101).

A non time code NAGRA-D or D-II will no longer put a time code value in the directory even if the time code record inhibit switch is in the READY position.

In the REF FREQ. Menu the 9600Hz reference position is operational again. (Since Version V3.00 this position would put the machine in REF 96 kHz by mistake).

The AES Output mode (1 Wire / 2 Wires) is no longer set to the same mode as the AES Input mode when the machine is powered up.

NAGRAVISION S.A
15 March 2000

Software bulletin for Versions V 3.03, V 3.04 and V3.05 for the NAGRA-D / DII

12 June 2001

V3.03 Correction of a bug. Upon power-up, if the AES12-96, AES12-88, REM 96 and REM 88.2 references had been selected (Menu REF FREQ) the machine would display the correct selection but would actually select the MASTER setting.

V3.04 Correction of a bug. In the half speed two track mode the location of a directory no longer worked correctly (the tape would wind off). The search now works at the same speed as in Full speed.

V3.05 Increase the Battery capacity menu selection to accommodate batteries up to 10 AH.

INTERNAL MENU TREE FOR NAGRA-D AND NAGRA-D II WITH SOFTWARE VERSION V3.01 CPU AND V3.02 TIME CODE

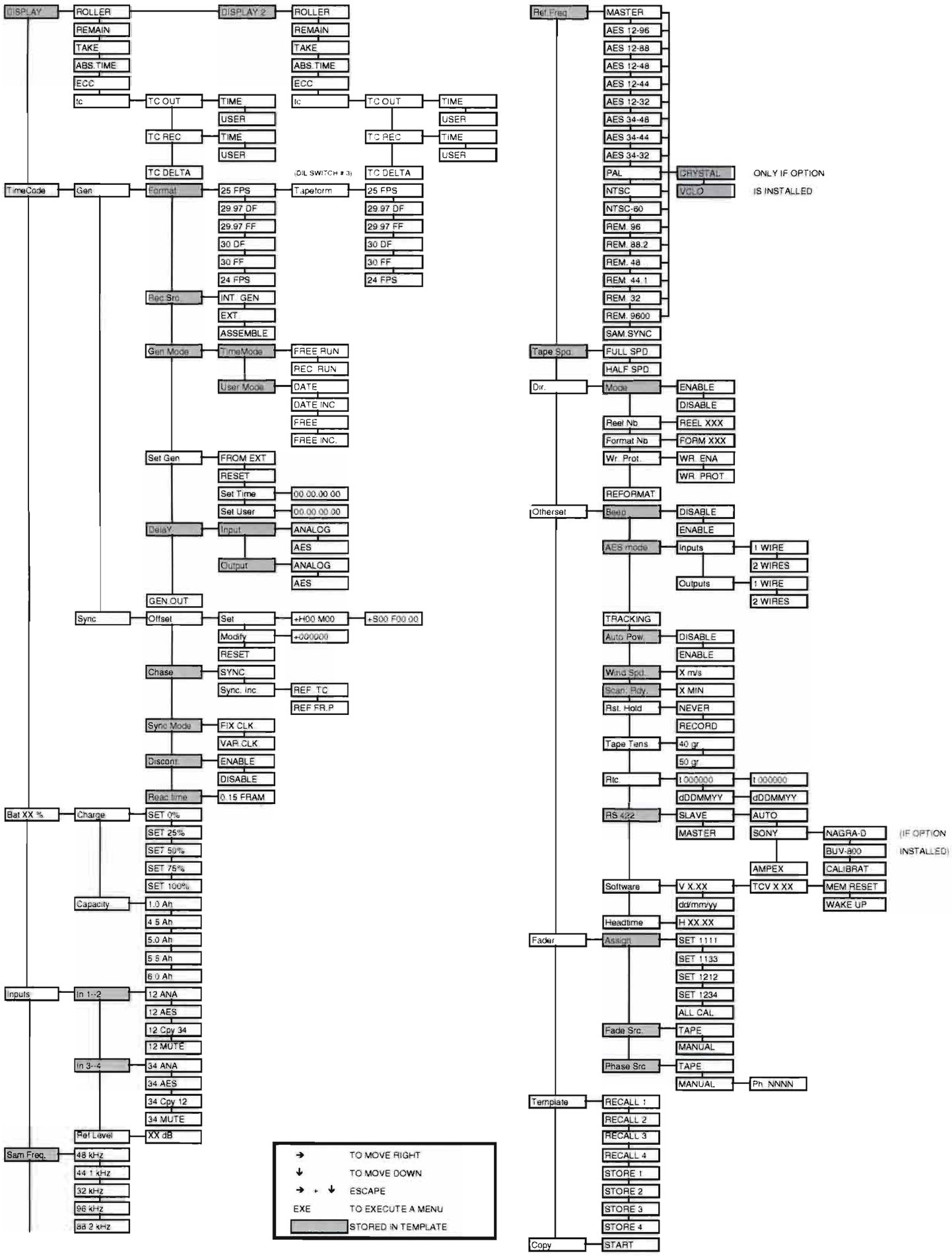

CHAPTER VI

ACCESSORIES

ELECTRICAL

1.1	ND-CCC	(Current control charger)
1.2	ND-EPC	(external power converter)
1.3	ND-LIA	(Line input attenuators)
1.4	ND-PCA	(P.C. adaptor RS 232 / RS 422)

MECHANICAL

2.1	ND-SET	(7" reel cover)
2.2	ND-PP	(Potentiometer protection)

1.1 ND-CCC (current control charger)

DESCRIPTION

The ND-CCC (#10500) is the standard mains power adaptor for the NAGRA-D. It is switchable between 110 and 220V ac. This charger is controlled by the internal microprocessor of the machine and it is fitted with a three pin female LEMO connector. The amount of current supplied by the charger depends on the state of the internal battery of the machine. The charger will supply either the charge current of 450 mA in order to charge the battery as well as the 2 A needed to run the machine. If the battery is fully charged then the machine will instruct the charger to send the 40 mA trickle charge to the battery to keep it full, as well as the 2 A to run the machine. When using this accessory to charge the internal battery of the machine then the NAGRA-D must be switched on.

The ND-CCC is fitted with a 1 A mains power fuse and a red LED to indicate that it is switched on.

Dimensions	245 x 137 x 67mm (L x W x H)
Weight	2.2 kg
Supply Voltage	110 OR 120 Vac (switchable)

Note: The schematic as well as the circuit lay-out for this accessory are at the end of the schematics in chapter VIII of this manual.

1.2 ND-EPC (external power converter)

DESCRIPTION:

The ND-EPC (# 10505) is the external DC / DC power converter for use with the NAGRA-D. It has the following characteristics:

Dimensions	150 x 120 x 55mm (L x W x H).
Weight	1.1 kg.
Supply voltage	11 - 30 V dc.

NOTE: *The NAGRA-D must be switched ON for this accessory to work. The internal battery of the machine will not charge if the machine is turned OFF.*

CONNECTION:

The three pole LEMO type connector connects to the "POWER" connector on the right-hand rear side of the NAGRA-D (where the normal mains charger ND-CCC is usually connected). The 4 pole XLR connector allows the ND-EPC to be connected to the external source which must be an external battery between 12 and 24 V, or an external DC supply with a voltage between 11V and 30V DC.
It is recommended that connection of the LEMO connector to the NAGRA-D be made before the external supply / battery is connected to the 4 pole XLR connector.

OPERATION:

The external converter, once connected to the DC supply, supplies the internal battery of the NAGRA-D with the power necessary to run the NAGRA-D as well as the charging current required to charge the internal battery. The output current of the ND-EPC is controlled by the CPU inside the NAGRA-D, which also manages the charge current of the internal battery, according to its state of charge.
Throughout the time when the internal battery is at less than 100% charge, a charging current of 0.42A is sent to the internal battery of the machine, providing the NAGRA-D is switched ON.

Automatic charging of the internal battery will start as soon as the external converter is connected to the machine and the voltage of the internal battery is lower than 12V. This is a minimal initial charge necessary to bring the battery up to a level which will allow the NAGRA-D to be switched ON. It is not necessary for the NAGRA-D to be switched ON for this to occur.
A security circuit will stop the converter when the external power source voltage drops to less than 10.5V

LED INDICATIONS

The LED "Input Voltage" indicates that the ND-EPC is ON and is connected to the external source and that the NAGRA-D is switched ON. It will flash if the NAGRA-D is not connected.

The "Output Current" LED indicates inversely with respect to the output current of the ND-EPC. It will be dimly lit if the drain by the NAGRA-D is large (max current supply) (while the internal battery is less than 12 V as well as when the NAGRA-D is switched OFF)
It will be lit brightly when the NAGRA-D is fully charged and hence the current being supplied by the ND-EPC is less important.

1.3 ND-LIA (Line input attenuator)

Two ND-LIA (#10550) are delivered free of charge with each NAGRA-D. This is an attenuator to be connected to the line input of the machine when it is connected to a console. It provides 26 dB of attenuation while guaranteeing the dynamic range of the inputs at 110 dB. The attenuators are built into the connectors on the end of the cable and are connected directly to the console.

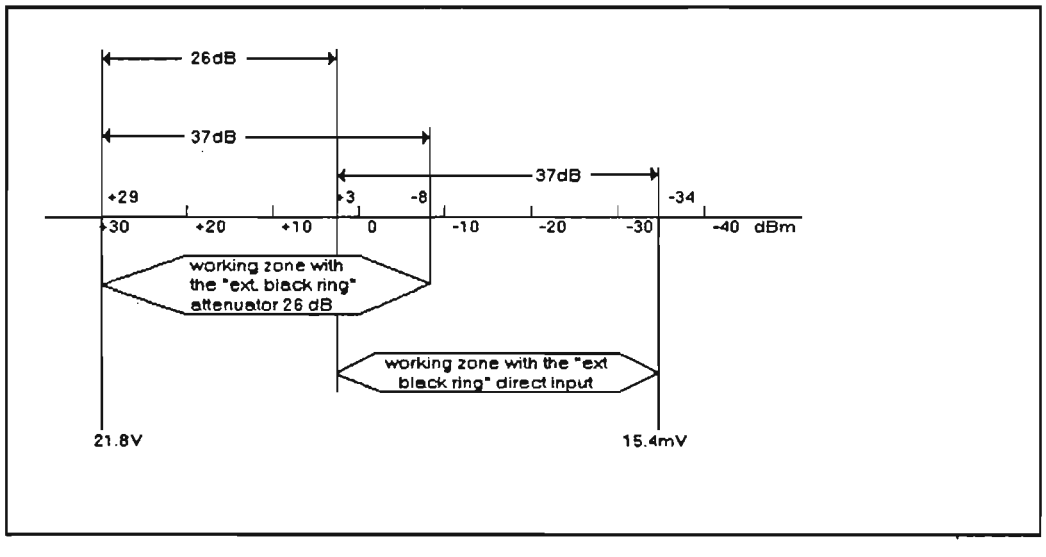

The diagram above indicates the operating range of the inputs of the NAGRA-D both with and without the line input attenuators.

The circuit diagram of the attenuator can be found in the schematics section.

1.4 ND-PCA (pc adaptor)

The ND-PCA (#10540) is an RS 232 / 422 convertor. This accessory is used to connect the NAGRA-D to a PC that is not fitted with an RS 422 port. The actual adaptor is built into the cable and is powered by the serial communication bus. When this accessory is used it is possible to then use the NADCOM software in the PC.

The schematics and lay-out for this accessory can be found in the schematics section of this manual.

2.1 ND-SET (7" reels cover)

The ND-SET is the external cover and frame that can be fitted to the NAGRA-D so that 7" (18 cm) reels of tape may be used with the plexi-glass cover closed. The accessory comes with all the necessary brackets and screws to fit it to the NAGRA-D. This accessory is very similar to the QSET-2 cover for the portable analog NAGRA's. In addition to the ND-SET being fitted to the machine, it is of course necessary to put the reel motors into the 7" reels position.

It should be noted that the ND-SCC carrying case may not be fitted to the machine if the 7" reel cover is being used.

2.2 ND-PP (potentiometer protection)

The ND-PP (#10560) is a simple protection bar that can be fitted to the front of the NAGRA-D. It serves two purposes, firstly to protect the input potentiometers and faders from accidently being moved during a recording, but also serves as a support for the hand while making fine adjustments. It is installed in place of the deck closing screws on the front of the machine and it is fitted with thumb screws to make opening the deck plate easier.

1

June 1994

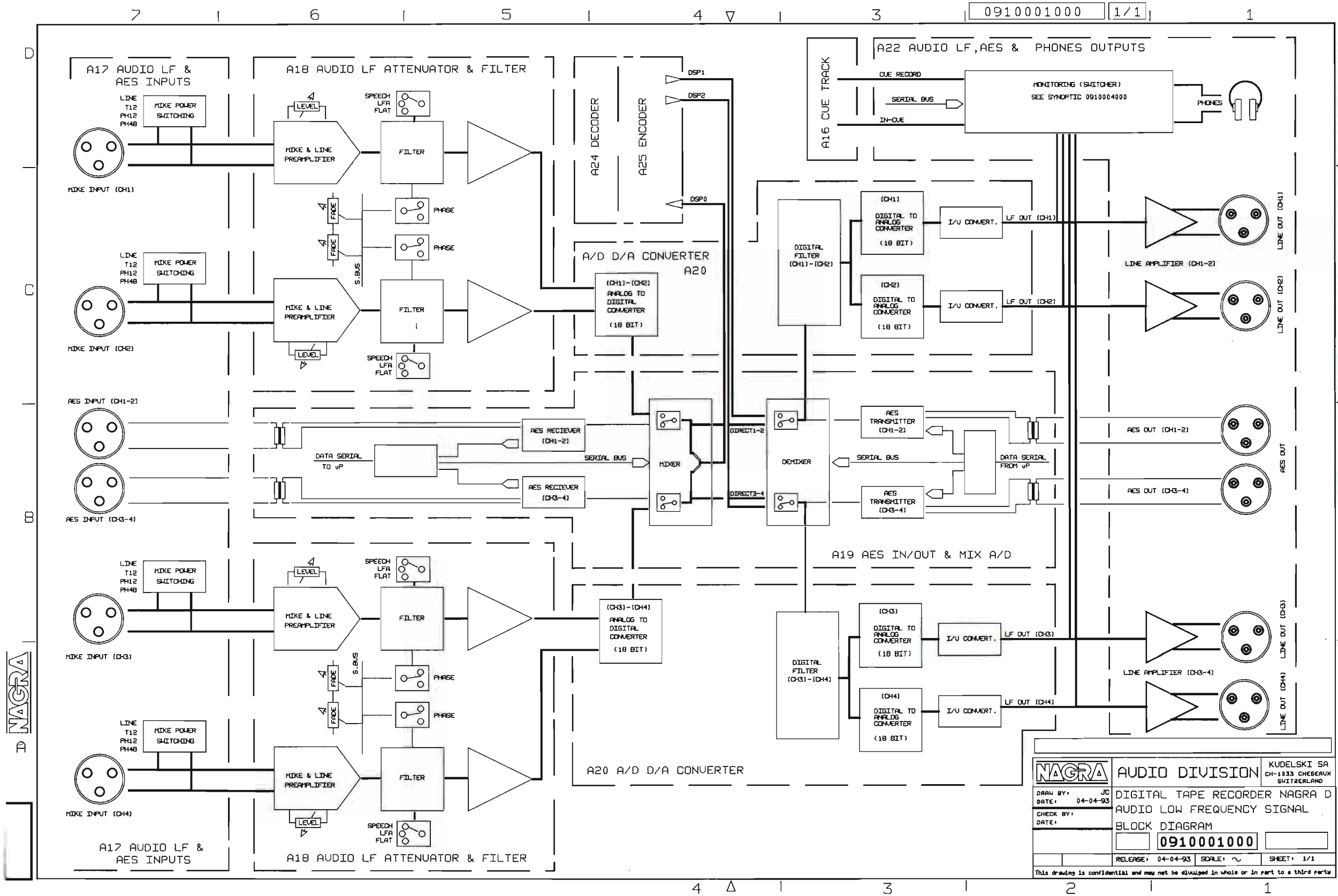
0910001000
1/1
A17 AUDIO LF & AES INPUTS
A18 AUDIO LF ATTENUATOR & FILTER
A22 AUDIO LF,AES & PHONES OUTPUTS
A16 CUE TRACK
A24 DECODER
A25 ENCODER
A/D D/A CONVERTER A20
A19 AES IN/OUT & MIX A/D
A20 A/D D/A CONVERTER
LINE
T12
PH12
PH48
MIKE POWER SWITCHING
MIKE INPUT (CH1)
MIKE INPUT (CH2)
MIKE INPUT (CH3)
MIKE INPUT (CH4)
LEVEL
SPEECH
LFA
FLAT
MIKE & LINE PREAMPLIFIER
FILTER
FADE
PHASE
S.BUS
DSP1
DSP2
DSP0
(CH1)-(CH2) ANALOG TO DIGITAL CONVERTER (18 BIT)
(CH3)-(CH4) ANALOG TO DIGITAL CONVERTER (18 BIT)
AES INPUT (CH1-2)
AES INPUT (CH3-4)
AES RECIEVER (CH1-2)
AES RECIEVER (CH3-4)
DATA SERIAL TO uP
SERIAL BUS
MIXER
DIRECT1-2
DIRECT3-4
DEMIXER
AES TRANSMITTER (CH1-2)
AES TRANSMITTER (CH3-4)
DATA SERIAL FROM uP
DIGITAL FILTER (CH1)-(CH2)
DIGITAL FILTER (CH3)-(CH4)
(CH1) DIGITAL TO ANALOG CONVERTER (18 BIT)
(CH2) DIGITAL TO ANALOG CONVERTER (18 BIT)
(CH3) DIGITAL TO ANALOG CONVERTER (18 BIT)
(CH4) DIGITAL TO ANALOG CONVERTER (18 BIT)
I/V CONVERT.
LF OUT (CH1)
LF OUT (CH2)
LF OUT (CH3)
LF OUT (CH4)
CUE RECORD
SERIAL BUS
IN-CUE
MONITORING (SWITCHER)
SEE SYNOPTIC 0910004000
PHONES
LINE AMPLIFIER (CH1-2)
LINE AMPLIFIER (CH3-4)
LINE OUT (CH1)
LINE OUT (CH2)
LINE OUT (CH3)
LINE OUT (CH4)
AES OUT (CH1-2)
AES OUT (CH3-4)
AES OUT
NAGRA
AUDIO DIVISION
KUDELSKI SA
CH-1033 CHESEAUX
SWITZERLAND
DRAW BY: JC
DATE: 04-04-93
CHECK BY:
DATE:
DIGITAL TAPE RECORDER NAGRA D
AUDIO LOW FREQUENCY SIGNAL
BLOCK DIAGRAM
0910001000
RELEASE: 04-04-93
SCALE: ~
SHEET: 1/1
This drawing is confidential and may not be divulged in whole or in part to a third party

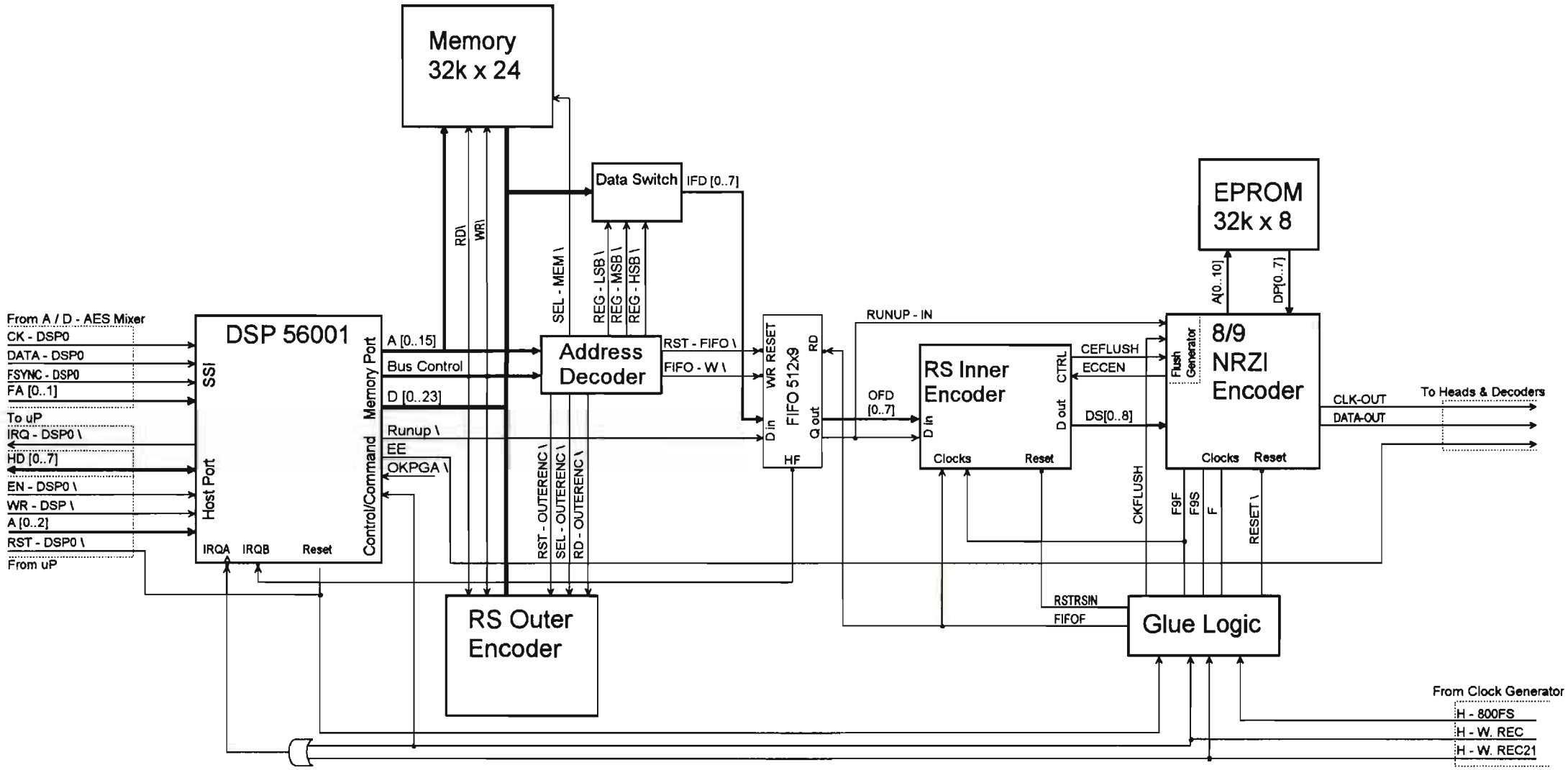

Encoder block

Synoptic diagram

NAGRA DIGITAL

Echelle	Dessiné	29.06.93	TRAN T.
%	Repère	09 10 002 000	

NAGRA CH-1033 Cheseaux Switzerland

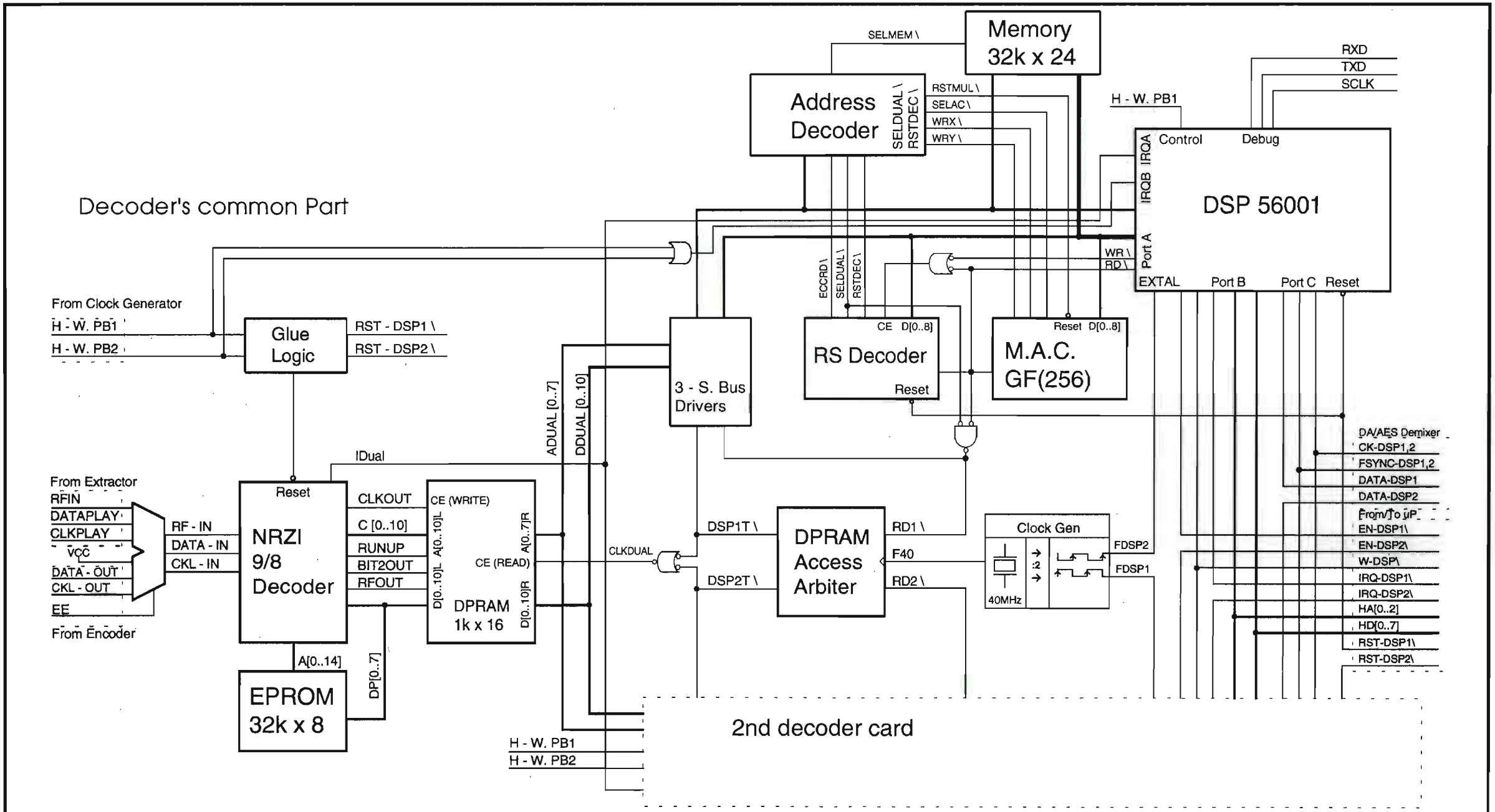

Decoder block

Synoptic diagram

NAGRA DIGITAL

Echelle	Dessiné	29.06.93	TRAN T.
%	Repère	09 10 003 000	

NAGRA CH-1033 Cheseaux Switzerland

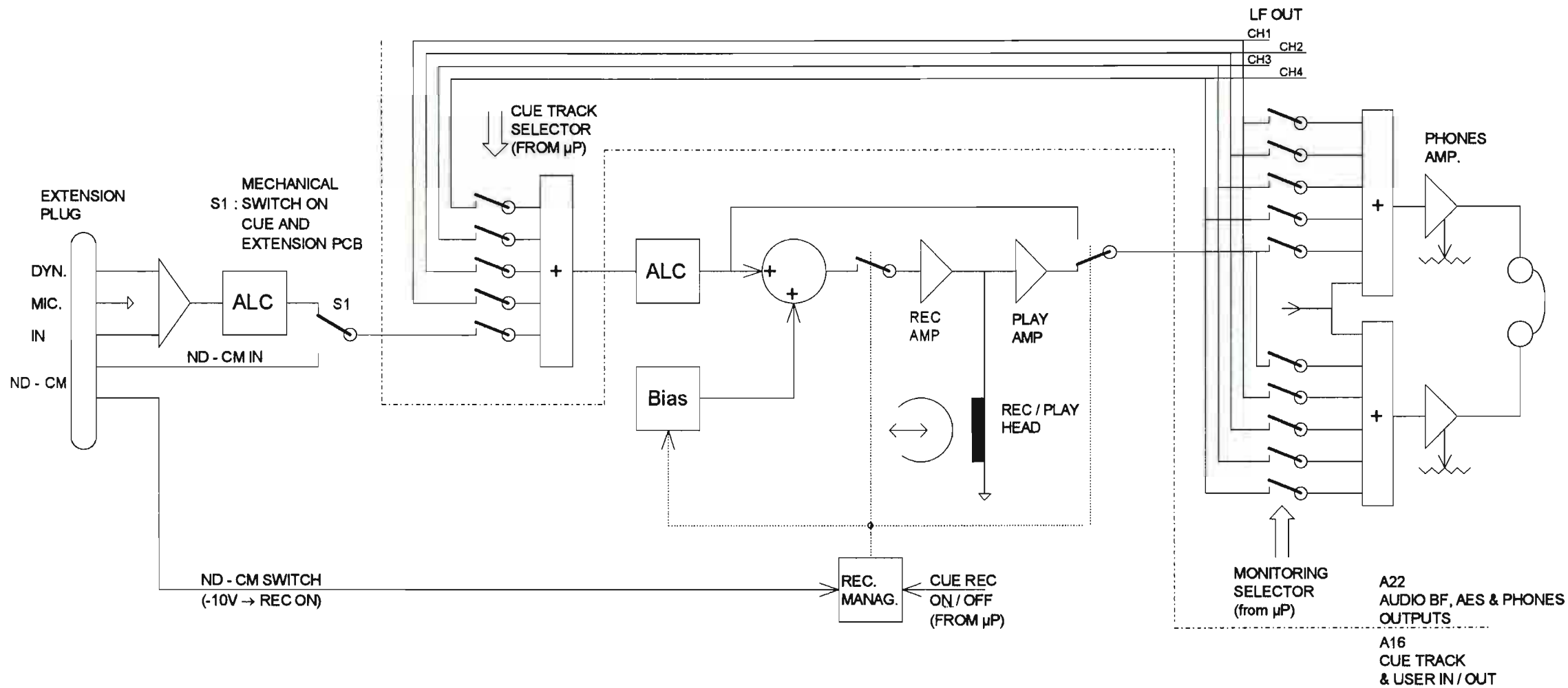

CUE record / playback & MONITORING

Synoptic diagram

NAGRA DIGITAL

Echelle	Dessiné	30.06.93	TRAN T.
%	Repère	09 10 004 000	

NAGRA CH-1033 Cheseaux Switzerland

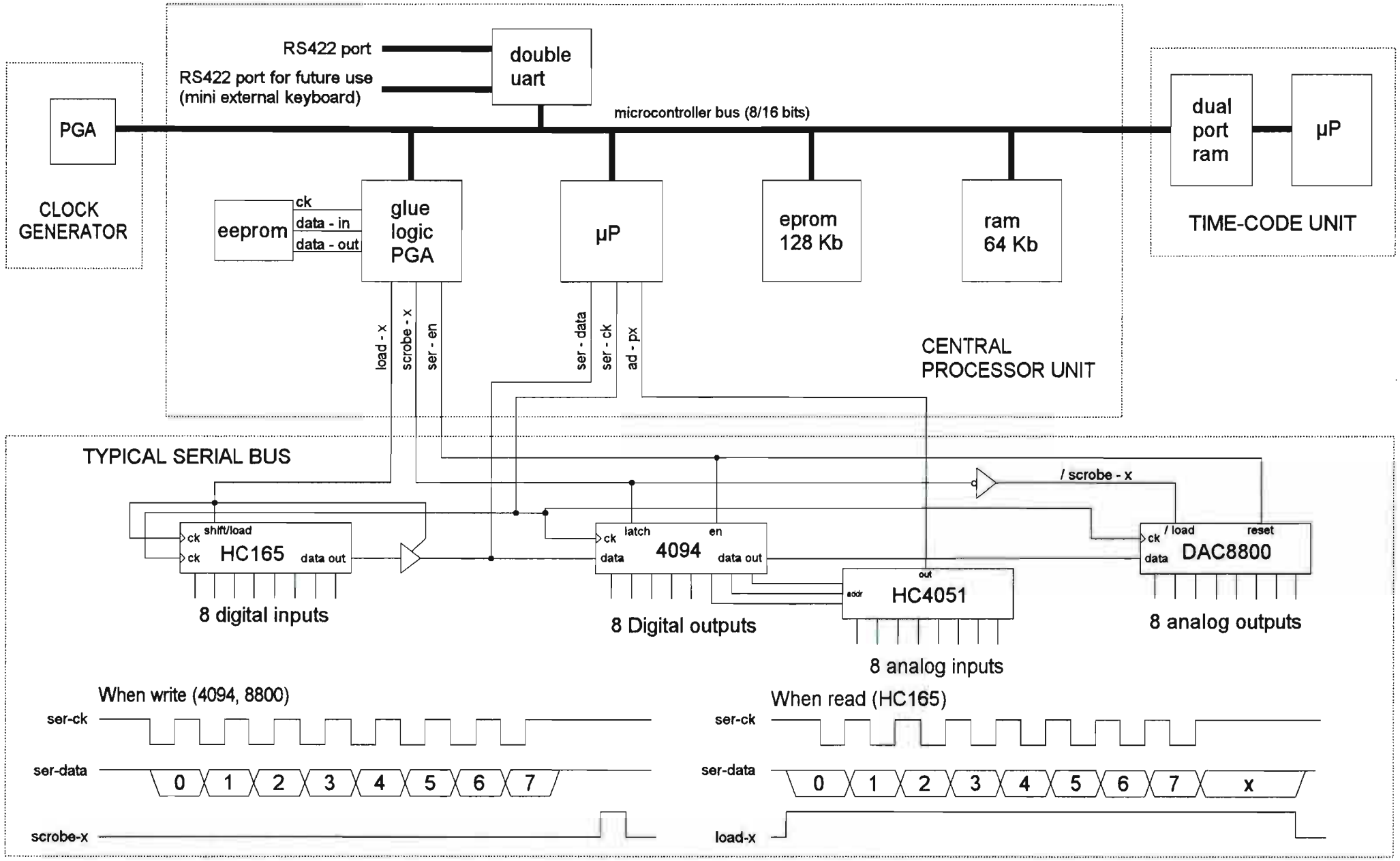

Communication & Logic

Synoptic diagram

NAGRA DIGITAL

Echelle	Dessiné	25.06.93	TRAN T.
%	Repère	09 10 005 000	

NAGRA CH-1033 Cheseaux Switzerland

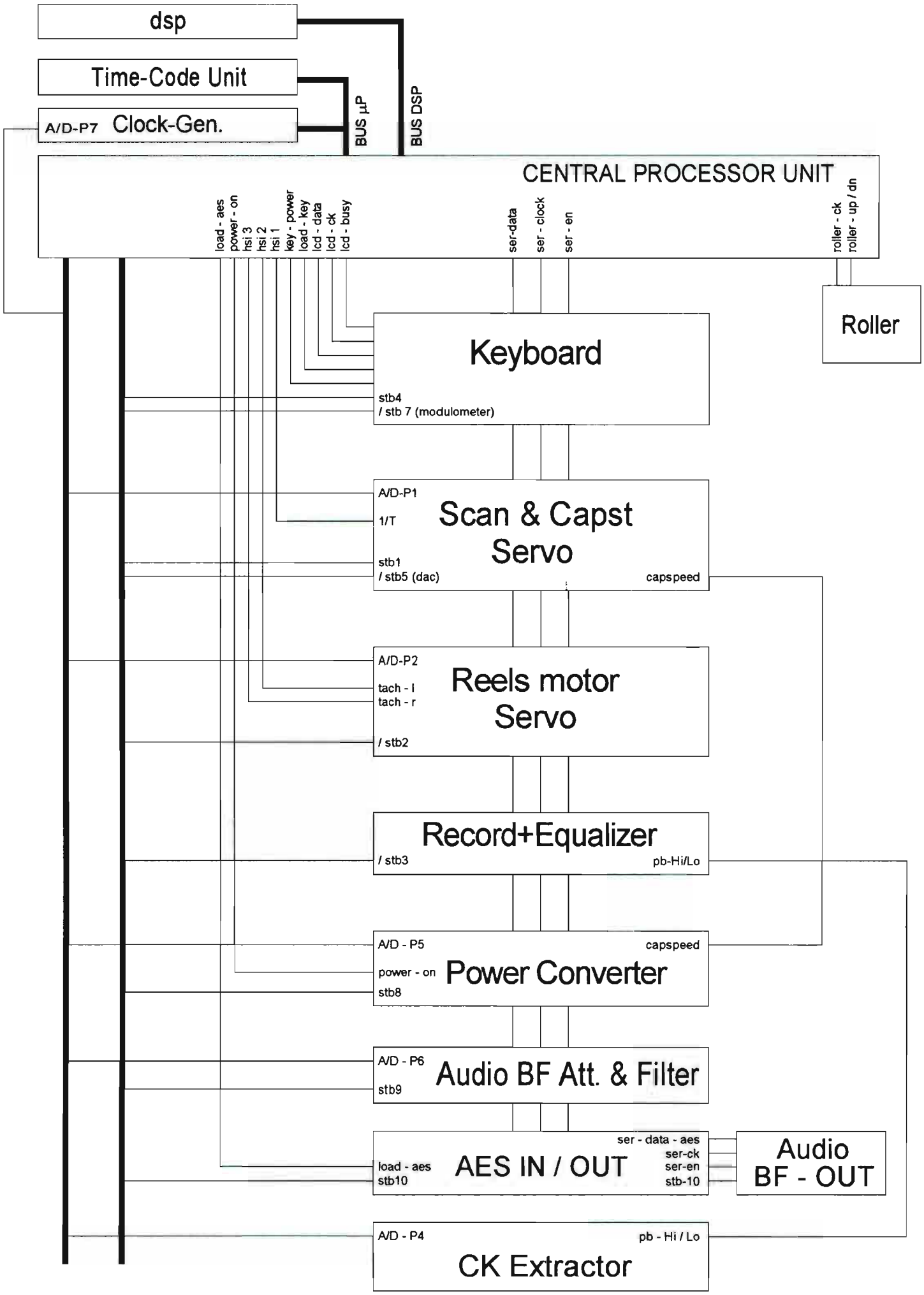

Internal bus

Synoptic diagram

NAGRA DIGITAL

Echelle %	Dessiné	25.06.93	TRAN T.
	Repère	09 10 006 000	

NAGRA CH-1033 Cheseaux Switzerland

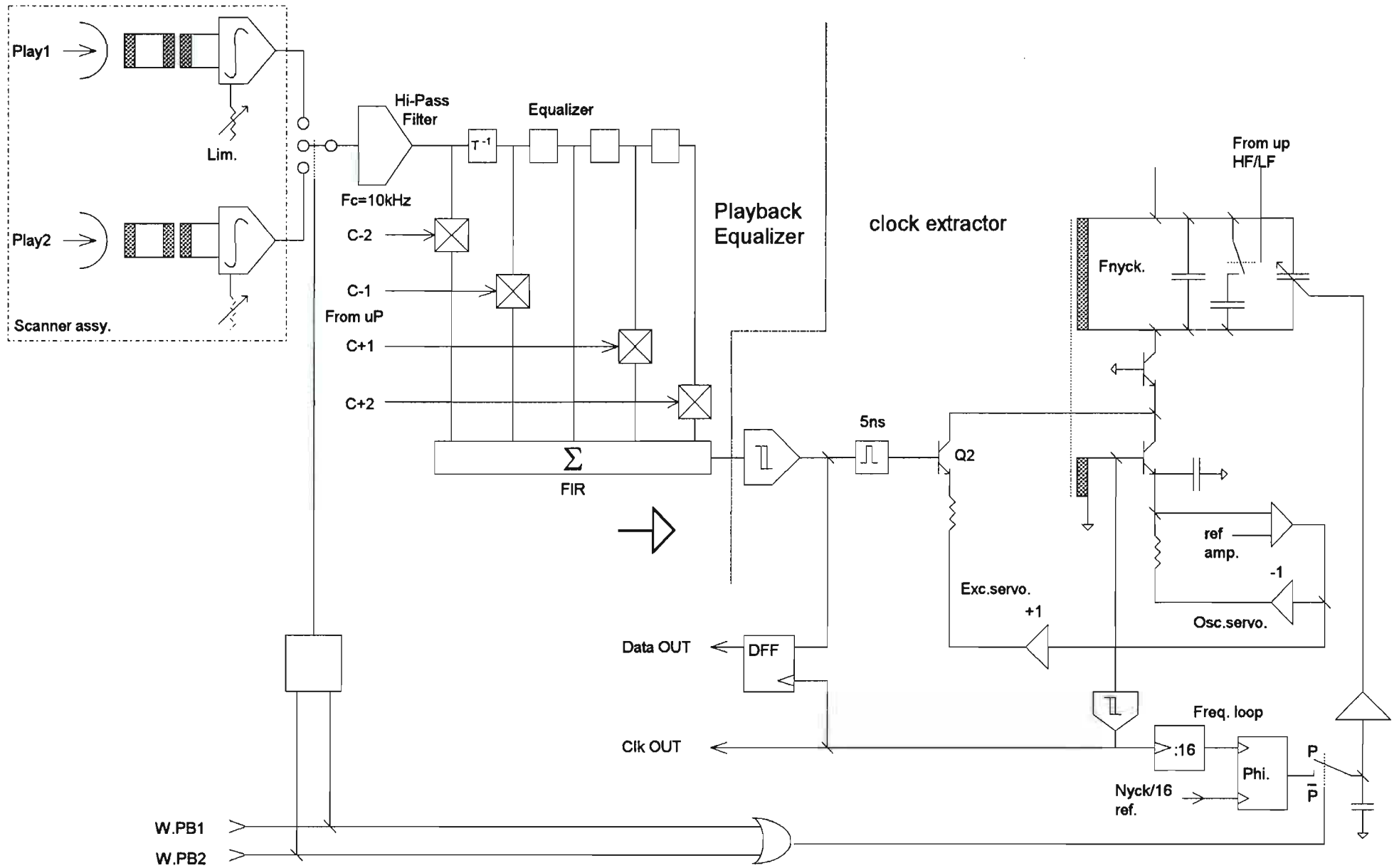

Equalizer + clock extractor

Synoptic diagram

NAGRA DIGITAL

Echelle %	Dessiné	25.06.93	TRAN T.
	Repère	09 10 007 000	

NAGRA CH-1033 Cheseaux Switzerland

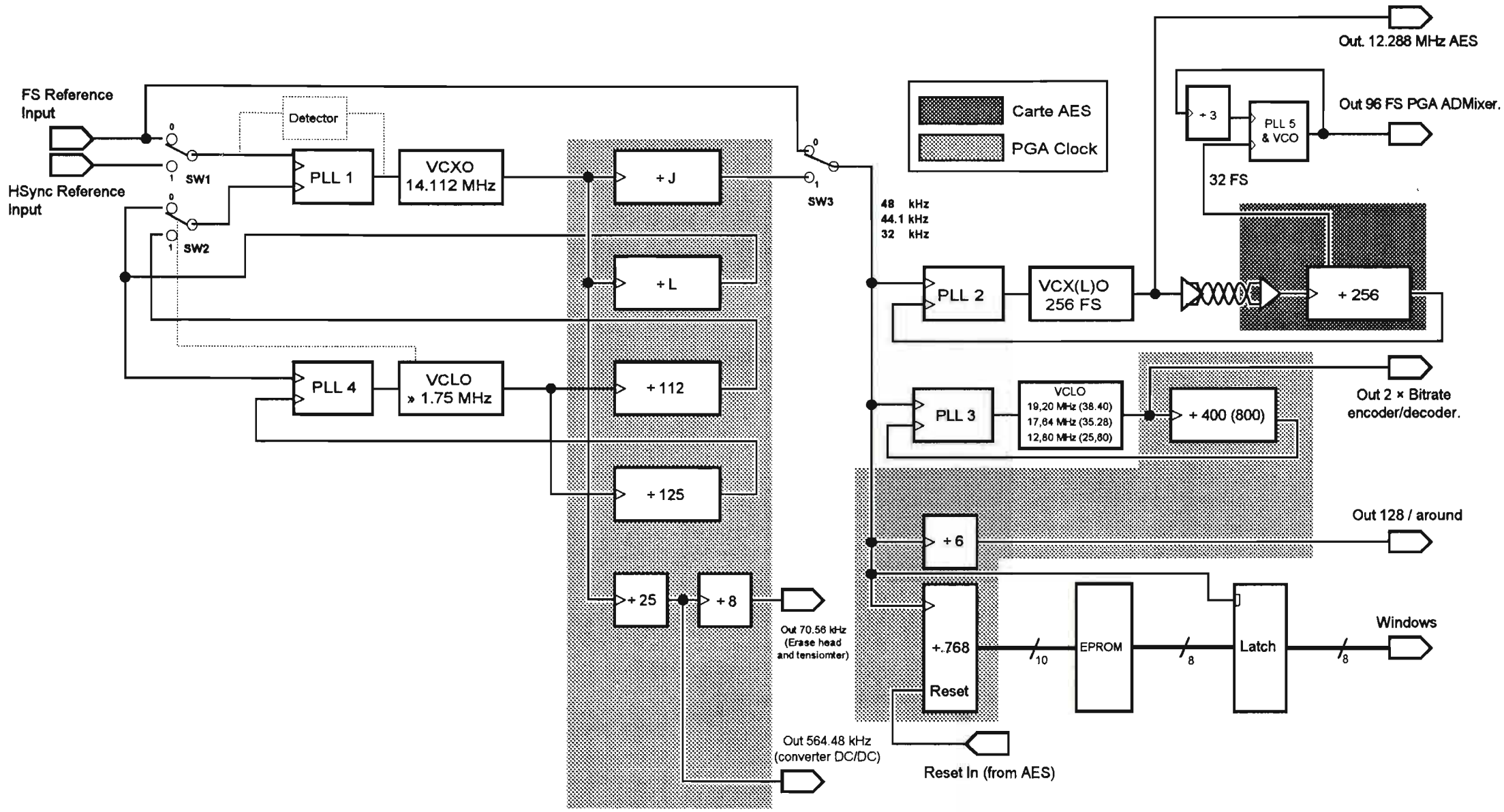

Clock generator

Synoptic diagram

NAGRA DIGITAL

Echelle %	Dessiné	25.06.93	TRAN T.
	Repère	09 10 008 000	

NAGRA CH-1033 Cheseaux Switzerland

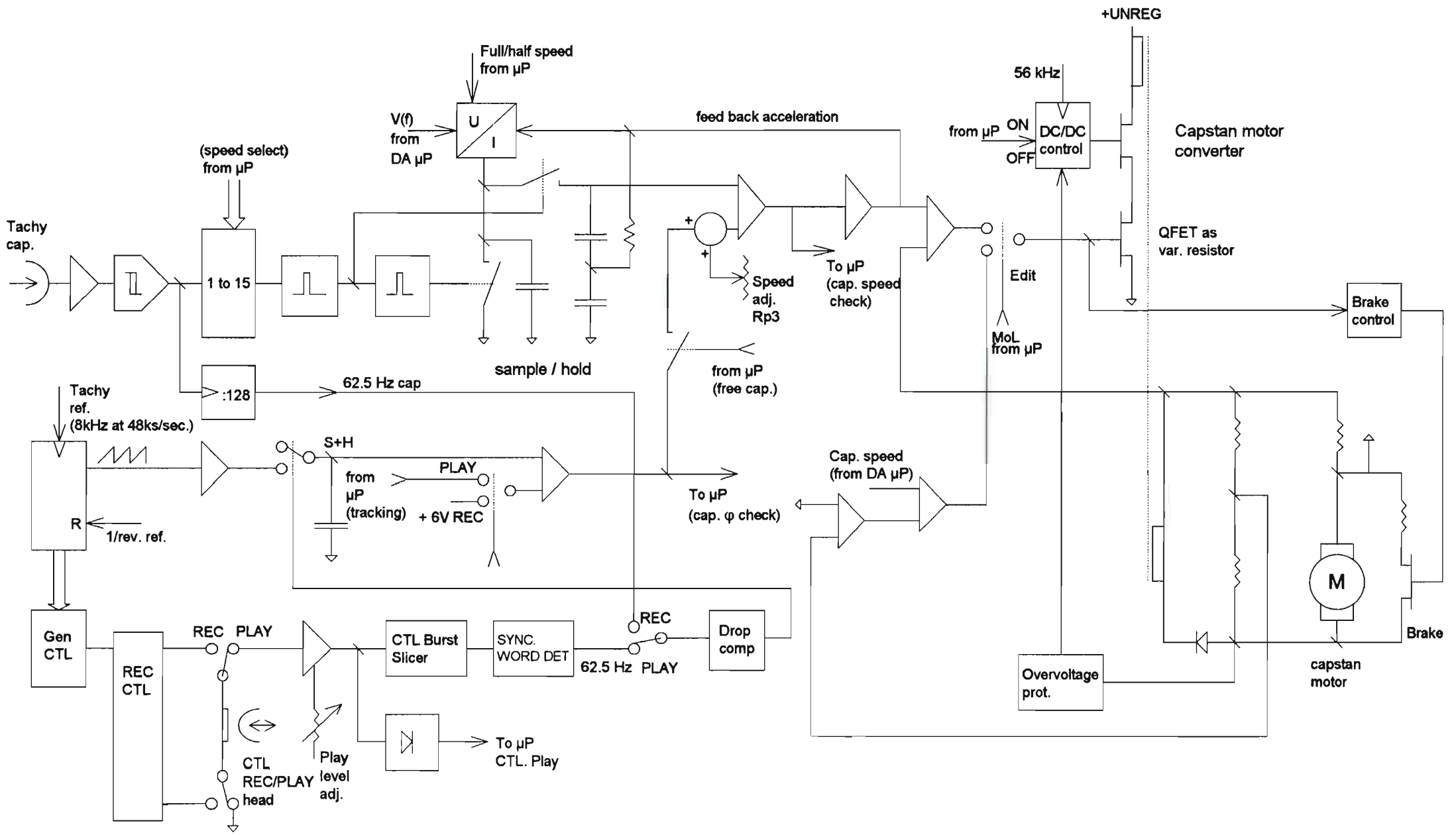

Capstan servo

Synoptic diagram

NAGRA DIGITAL

Echelle	Dessiné	25.06.93	TRAN T.
%	Repère	09 10 009 000	

NAGRA CH-1033 Cheseaux Switzerland

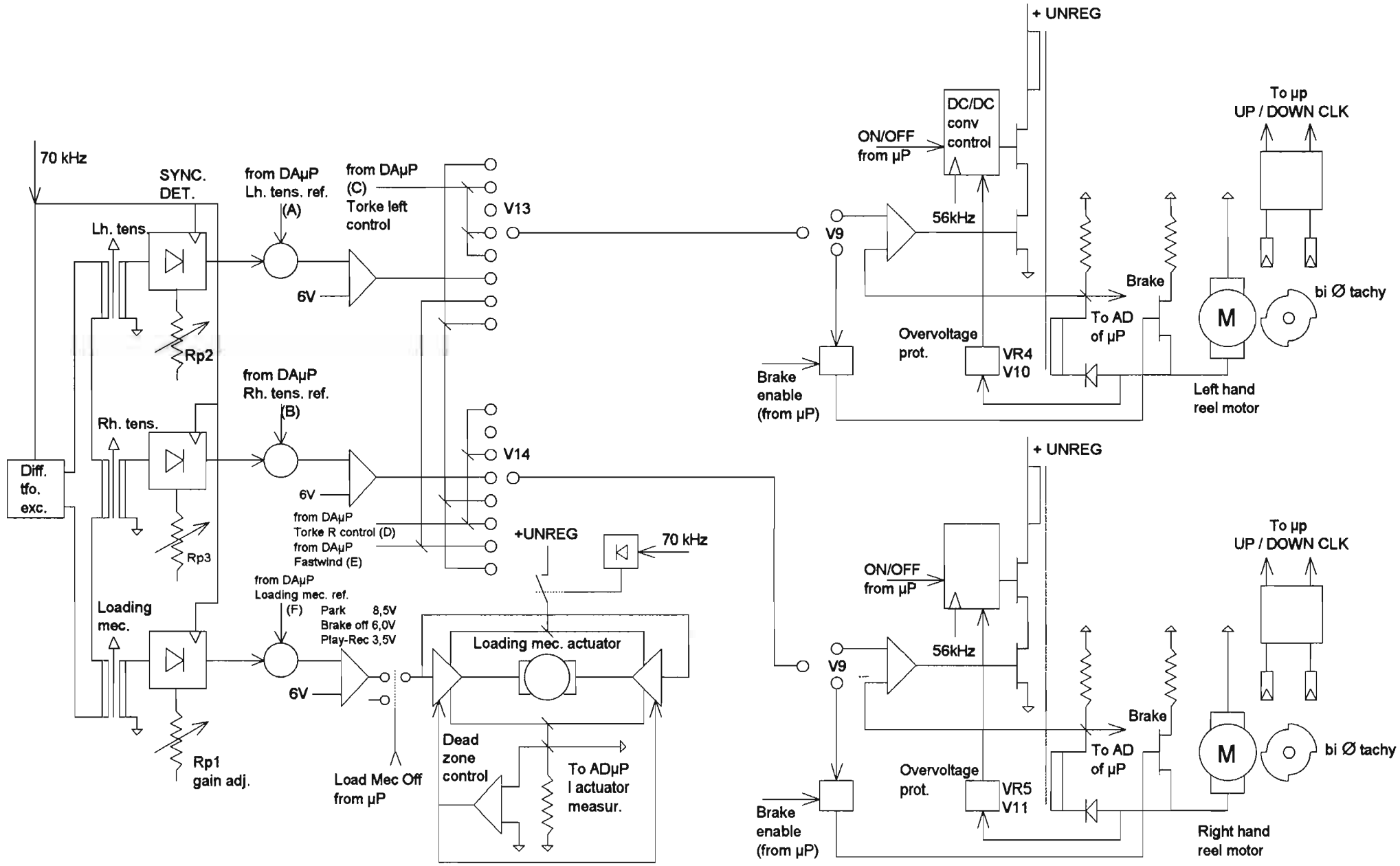

Reels servo & loading mec.

Synoptic diagram

NAGRA DIGITAL

Echelle	Dessiné	25.06.93	TRAN T.
%	Repère	09 10 010 000	

NAGRA CH-1033 Cheseaux Switzerland

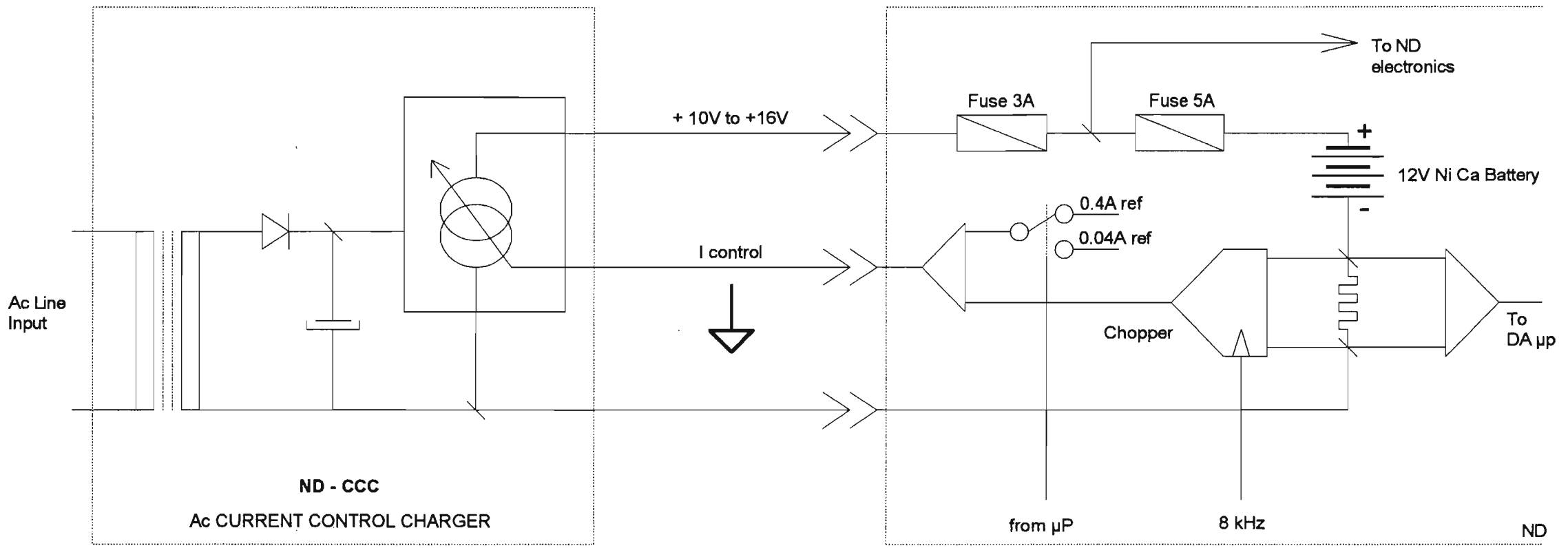

Battery charge control

Synoptic diagram

NAGRA DIGITAL

Echelle	Dessiné	25.06.93	TRAN T.
%	Repère	09 10 011 000	

NAGRA CH-1033 Cheseaux Switzerland

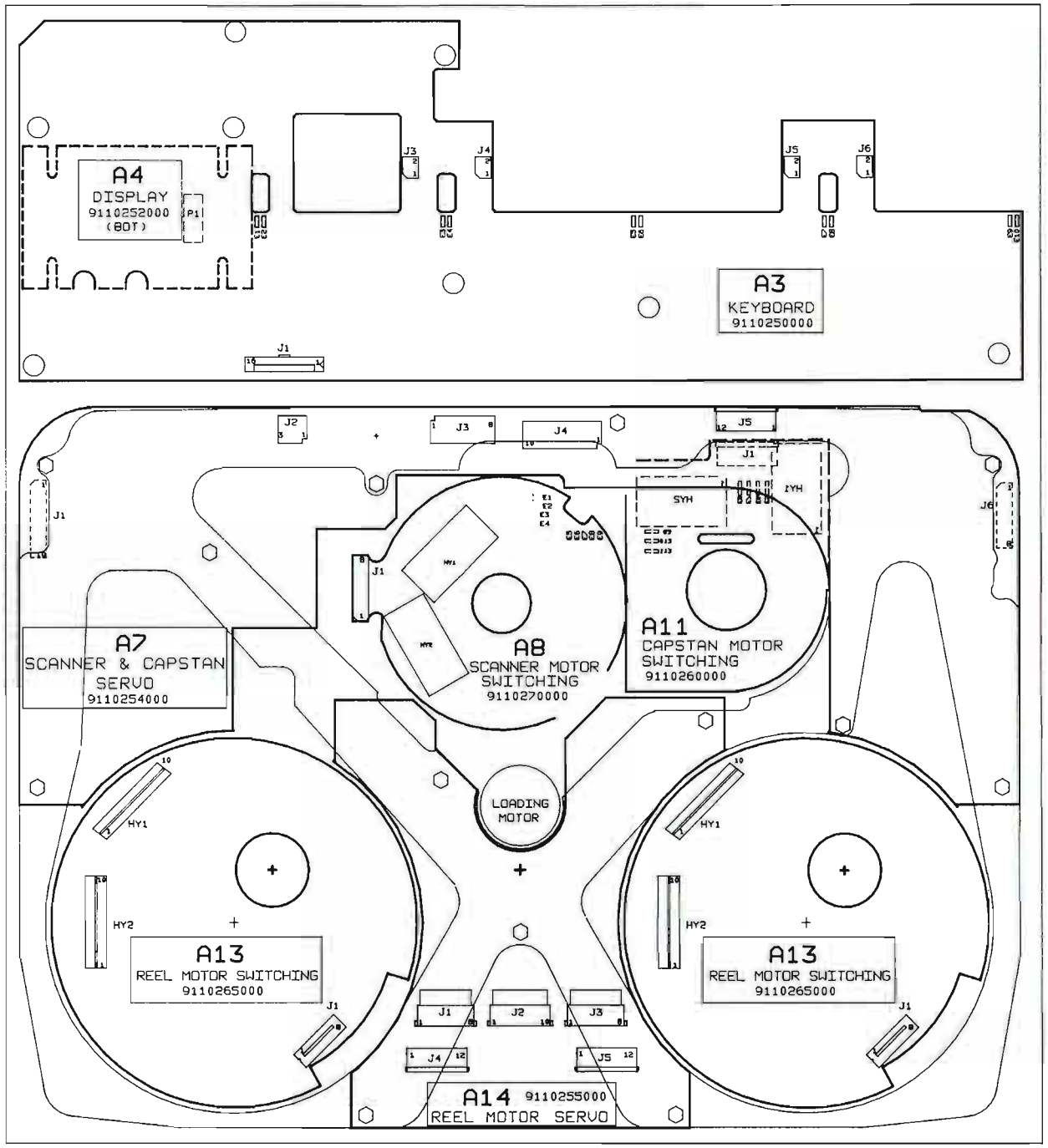

NAGRA D TAPE DECK PWA INSTALLED LEVEL 1 (INSIDE VIEW)

PWA INSTALLED TO THE TAPE DECK (LEVEL 1)

A13	REEL MOTOR SWITCHING (2X)	
A8	SCANNER MOTOR SWITCHING	SCANNER MOTOR
A9	SCANNER MOTOR TACHY	
B1	ROTARY TRANSFORMER INTERCON.	
B2	SCANNER FLEX INTERCON.	
A10	DIGITAL PLAYBACK PREAMPLIFIER	
A11	CAPSTAN MOTOR SWITCHING	CAPSTAN MOTOR
A12	CAPSTAN MOTOR TACHY	
A14	REEL MOTOR SERVO	
A7	SCANNER AND CAPSTAN SERVO	
A3	KEYBOARD	
A4	DISPLAY	

WARNING: HANDLE ONLY AT STATIC SAFE WORK STATION
ATTENTION: MANIPULATION UNIQUEMENT AUTORISEE SUR POSTE DE TRAVAIL PROTEGE
ACHTUNG: HANDHABUNG DAHER NUR AN GESCHÜTZTEN ARBEITSPLÄTZEN ERLAUBT

NAGRA AUDIO DIVISION
KUDELSKI SA
CH-1033 CHESEAUX
SWITZERLAND

DRAW BY: JC
DATE: 04-10-93
CHECK BY:
DATE:

DIGITAL TAPE RECORDER NAGRA D
TAPE DECK ASSEMBLY LEVEL 1
PWA INSTALLED (INSIDE VIEW)

9110001000

RELEASE: 04-04-93 SCALE: ~ SHEET: 1/1

This drawing is confidential and may not be divulged in whole or in part to a third party

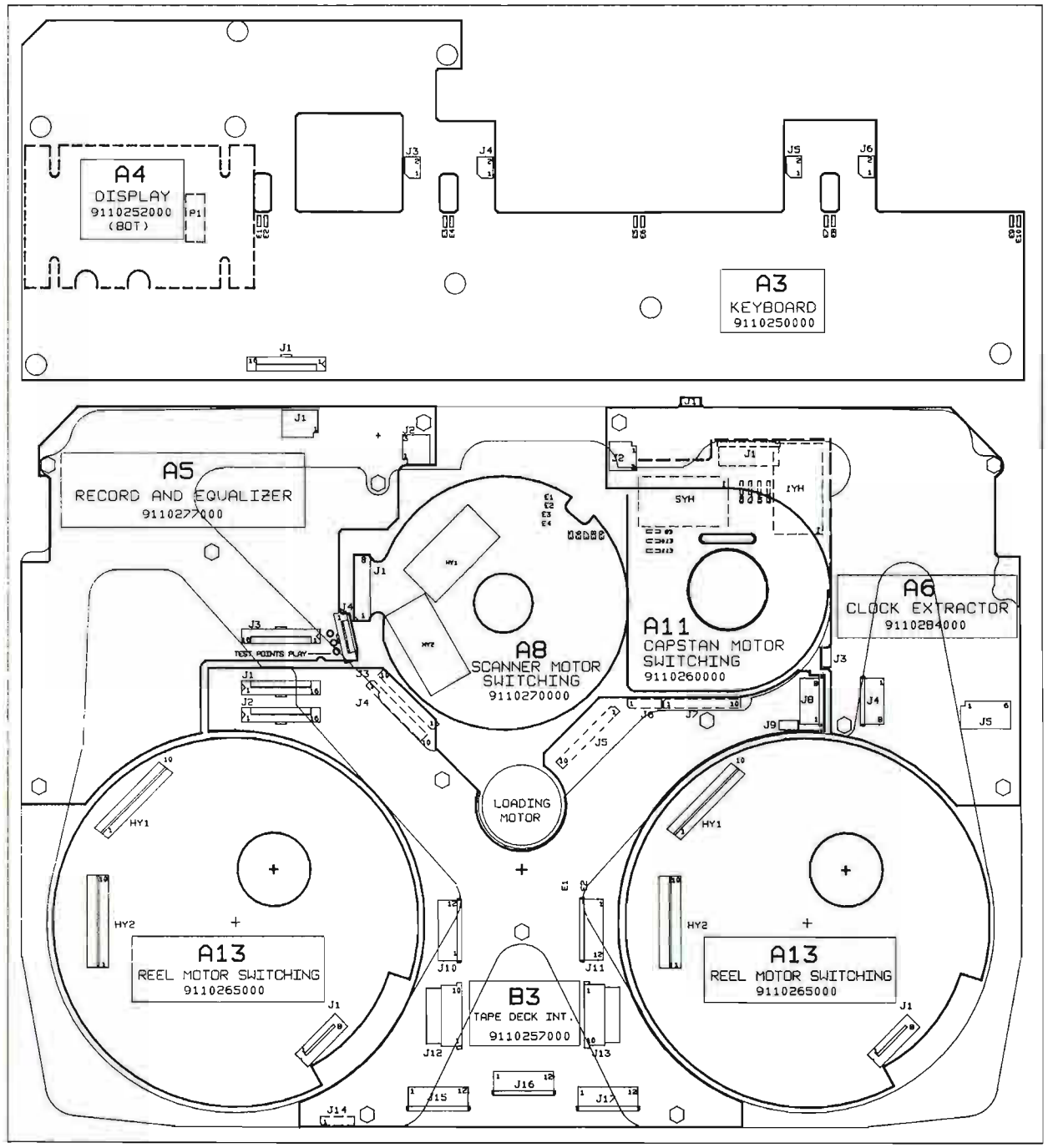

NAGRA D TAPE DECK PWA INSTALLED LEVEL 2 (INSIDE VIEW)

PWA INSTALLED TO THE TAPE DECK (LEVEL 2)

A13	REEL MOTOR SWITCHING (2X)	
A8	SCANNER MOTOR SWITCHING	SCANNER MOTOR
A9	SCANNER MOTOR TACHY	SCANNER MOTOR
B1	ROTARY TRANSFORMER INTERCON.	SCANNER MOTOR
B2	SCANNER FLEX INTERCON.	SCANNER MOTOR
A10	DIGITAL PLAYBACK PREAMPLIFIER	SCANNER MOTOR
A11	CAPSTAN MOTOR SWITCHING	CAPSTAN MOTOR
A12	CAPSTAN MOTOR TACHY	CAPSTAN MOTOR
B3	TAPE DECK INTERCON.	
A5	RECORD AND EQUALIZER	
A6	CLOCK EXTRACTOR	
A3	KEYBOARD	
A4	DISPLAY	

WARNING: HANDLE ONLY AT STATIC SAFE WORK STATION
ATTENTION: MANIPULATION UNIQUEMENT AUTORISEE SUR POSTE DE TRAVAIL PROTEGE
ACHTUNG: HANDHABUNG DAHER NUR AN GESCHÜTZTEN ARBEITSPLÄTZEN ERLAUBT

NAGRA AUDIO DIVISION
KUDELSKI SA
CH-1033 CHESEAUX
SWITZERLAND

DRAW BY: JC
DATE: 04-04-93
CHECK BY:
DATE:

DIGITAL TAPE RECORDER NAGRA D
TAPE DECK ASSEMBLY LEVEL 2
PWA INSTALLED (INSIDE VIEW)

9110002000

RELEASE: 04-04-93 SCALE: ~ SHEET: 1/1

This drawing is confidential and may not be divulged in whole or in part to a third party

9110003000 1/1

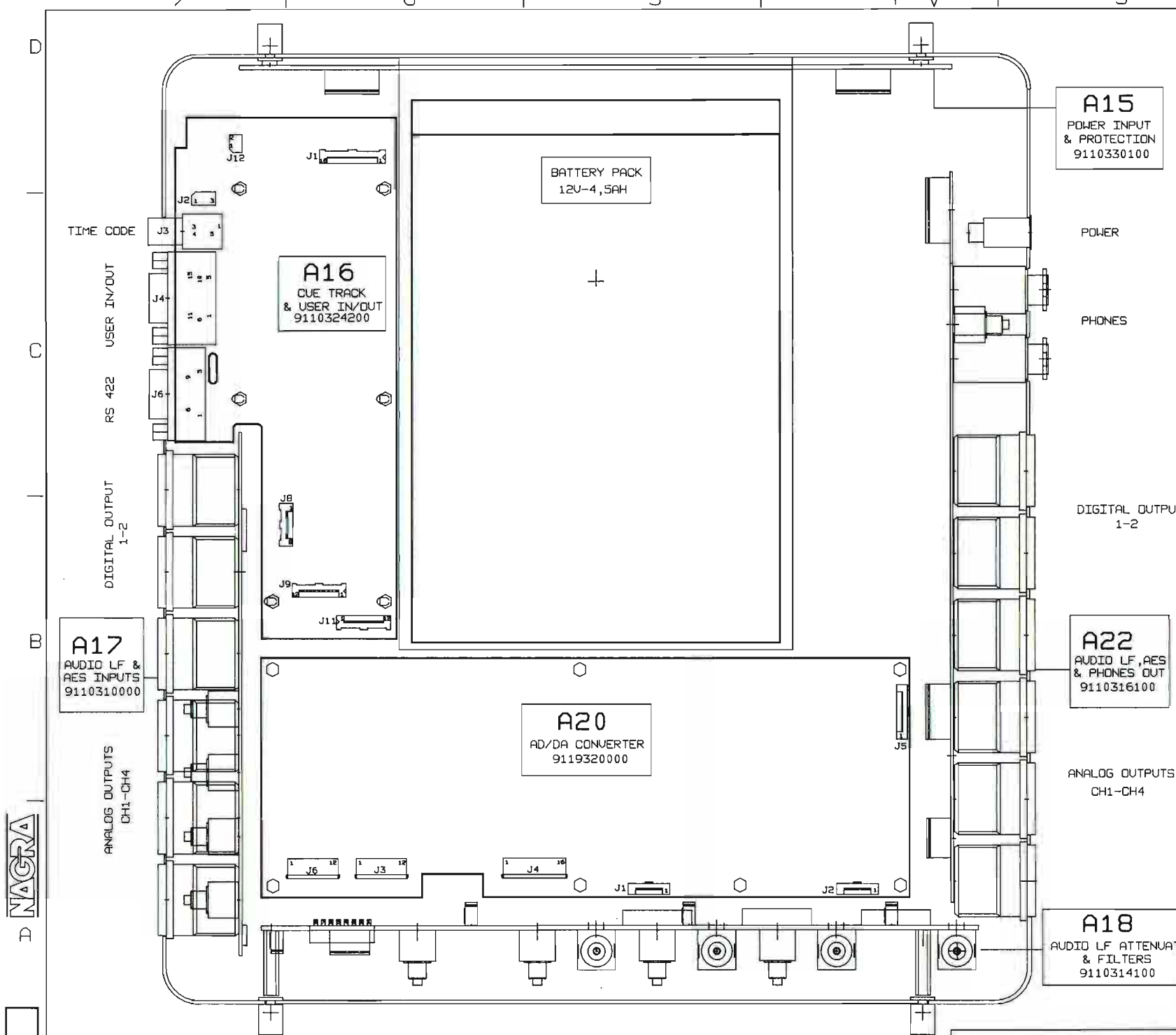

MAIN BOX AUDIO LF SIGNAL

PWA INSTALLED (LEVEL 1)

A15	POWER INPUT & PROTECTION
A16	CUE TRACK & USER IN/OUT
A17	AUDIO LF & AES INPUTS
A18	AUDIO LF ATTENUATORS & FILTERS
A20	A/D-D/A CONVERTER
A22	AUDIO LF,AES,& PHONES OUTPUTS

WARNING: HANDLE ONLY AT STATIC SAFE WORK STATION
ATTENTION: MANIPULATION UNIQUEMENT AUTORISEE SUR POSTE DE TRAVAIL PROTEGE
ACHTUNG: HANDHABUNG DAHER NUR AN GESCHÜTZTEN ARBEITSPLÄTZEN ERLAUBT

NAGRA AUDIO DIVISION KUDELSKI SA CH-1033 CHESEAUX SWITZERLAND

DRAW BY: JC
DATE: 04-40-93
CHECK BY:
DATE:

DIGITAL TAPE RECORDER NAGRA D
MAIN BOX AUDIO LF SIGNAL
PWA INSTALLED (LEVEL 1)

9110003000

RELEASE: 04-40-93 SCALE: ~ SHEET: 1/1

This drawing is confidential and may not be divulged in whole or in part to a third party

9110004000 1/1

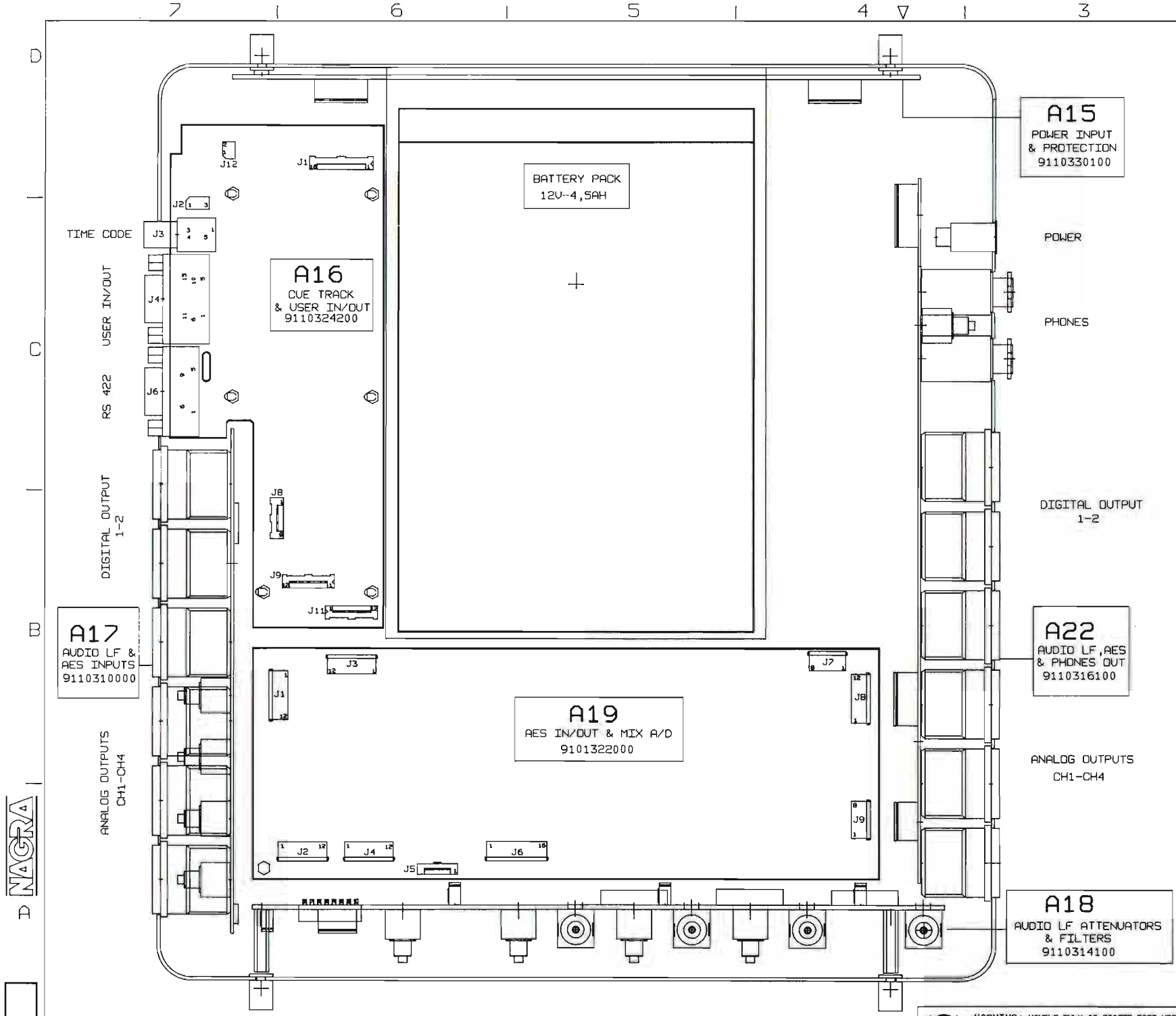

MAIN BOX AUDIO LF SIGNAL

PWA INSTALLED (LEVEL 2)

A15	POWER INPUT & PROTECTION
A16	CUE TRACK & USER IN/OUT
A17	AUDIO LF & AES INPUTS
A18	AUDIO LF ATTENUATORS & FILTERS
A19	AES IN/OUT & MIXER A/D
A22	AUDIO LF,AES,& PHONES OUTPUTS

WARNING: HANDLE ONLY AT STATIC SAFE WORK STATION
ATTENTION: MANIPULATION UNIQUEMENT AUTORISEE SUR POSTE DE TRAVAIL PROTEGE
ACHTUNG: HANDHABUNG DAHER NUR AN GESCHÜTZTEN ARBEITSPLÄTZEN ERLAUBT

NAGRA AUDIO DIVISION KUDELSKI SA CH-1033 CHESEAUX SWITZERLAND

DRAW BY: JC
DATE: 04-40-93
CHECK BY:
DATE:

DIGITAL TAPE RECORDER NAGRA D
MAIN BOX AUDIO LF SIGNAL
PWA INSTALLED (LEVEL 2)

9110004000

RELEASE: 04-40-93 SCALE: ∿ SHEET: 1/1

This drawing is confidential and may not be divulged in whole or in part to a third party

9110005000 1/1

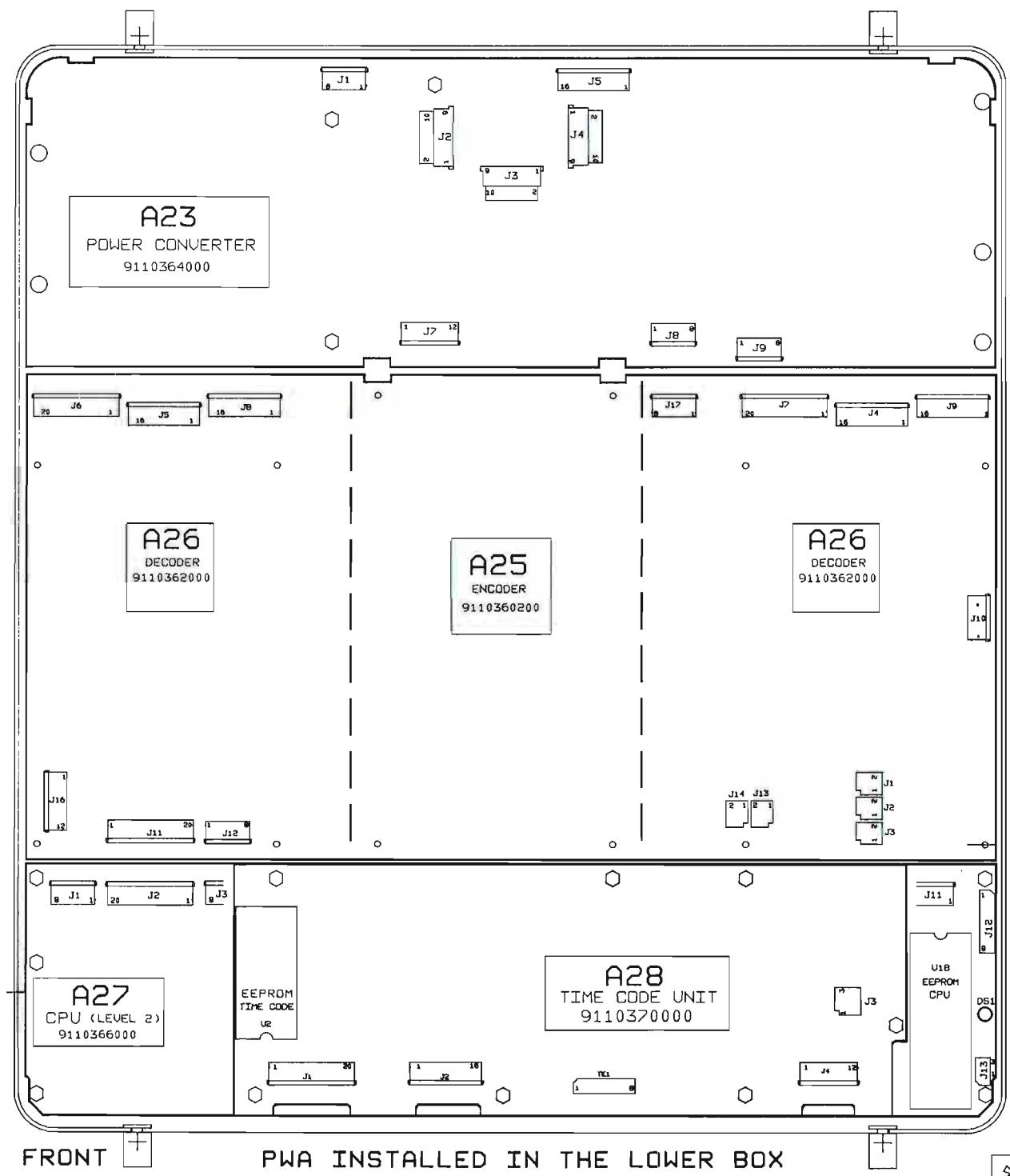

PWA INSTALLED IN THE LOWER BOX

LOWER BOX POWER & DIGITAL SIGNAL

PWA INSTALLED (LEVEL 1)

A23	POWER CONVERTER
A25	ENCODER
A26	DECODER (2X)
A27	CENTRAL PROCESSING UNIT
A28	TIME CODE UNIT (OPTION)

WARNING: HANDLE ONLY AT STATIC SAFE WORK STATION
ATTENTION: MANIPULATION UNIQUEMENT AUTORISEE SUR POSTE DE TRAVAIL PROTEGE
ACHTUNG: HANDHABUNG DAHER NUR AN GESCHÜTZTEN ARBEITSPLÄTZEN ERLAUBT

NAGRA AUDIO DIVISION
KUDELSKI SA
CH-1033 CHESEAUX
SWITZERLAND

DRAW BY: JC
DATE: 04-04-93
CHECK BY:
DATE:

DIGITAL TAPE RECORDER NAGRA D
LOWER BOX POWER & DIGITAL SIGNAL
PWA INSTALLED (LEVEL 1)

9110005000

RELEASE: 04-04-93 SCALE: ∿ SHEET: 1/1

This drawing is confidential and may not be divulged in whole or in part to a third party

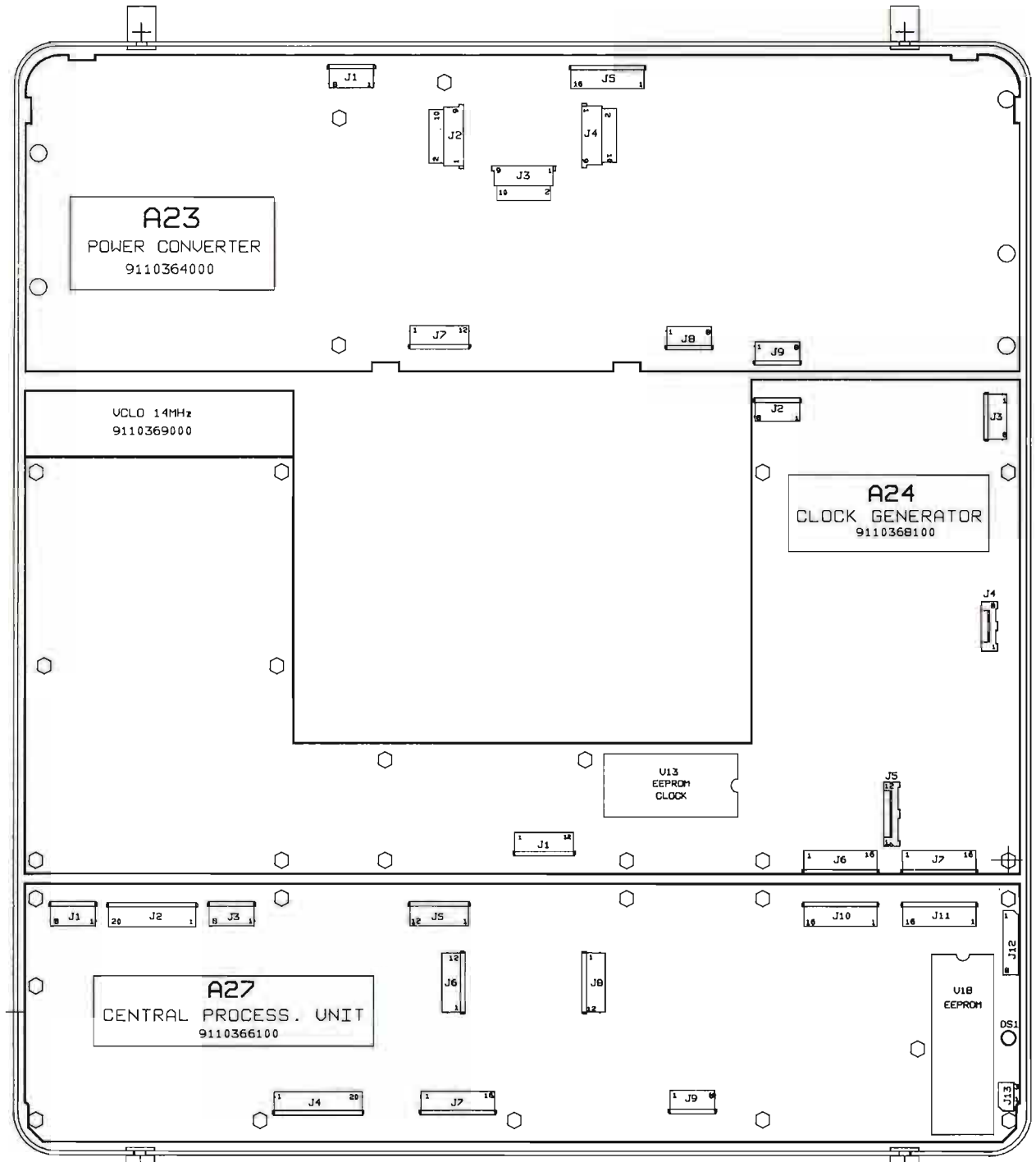

FRONT

PWA INSTALLED IN THE LOWER BOX

LOWER BOX POWER & DIGITAL SIGNAL

PWA INSTALLED (LEVEL 2)

A23	POWER CONVERTER
A24	CLOCK GENERATOR
A27	CENTRAL PROCESSING UNIT

WARNING: HANDLE ONLY AT STATIC SAFE WORK STATION
ATTENTION: MANIPULATION UNIQUEMENT AUTORISEE SUR POSTE DE TRAVAIL PROTEGE
ACHTUNG: HANDHABUNG DAHER NUR AN GESCHÜTZTEN ARBEITSPLÄTZEN ERLAUBT

NAGRA AUDIO DIVISION
KUDELSKI SA
CH-1033 CHESEAUX
SWITZERLAND

DRAW BY: JC
DATE: 04-04-93
CHECK BY:
DATE:

DIGITAL TAPE RECORDER NAGRA D
LOWER BOX POWER & DIGITAL SIGNAL
PWA INSTALLED (LEVEL 2)

9110006000

RELEASE: 04-04-93 SCALE: ~ SHEET: 1/1

This drawing is confidential and may not be divulged in whole or in part to a third party

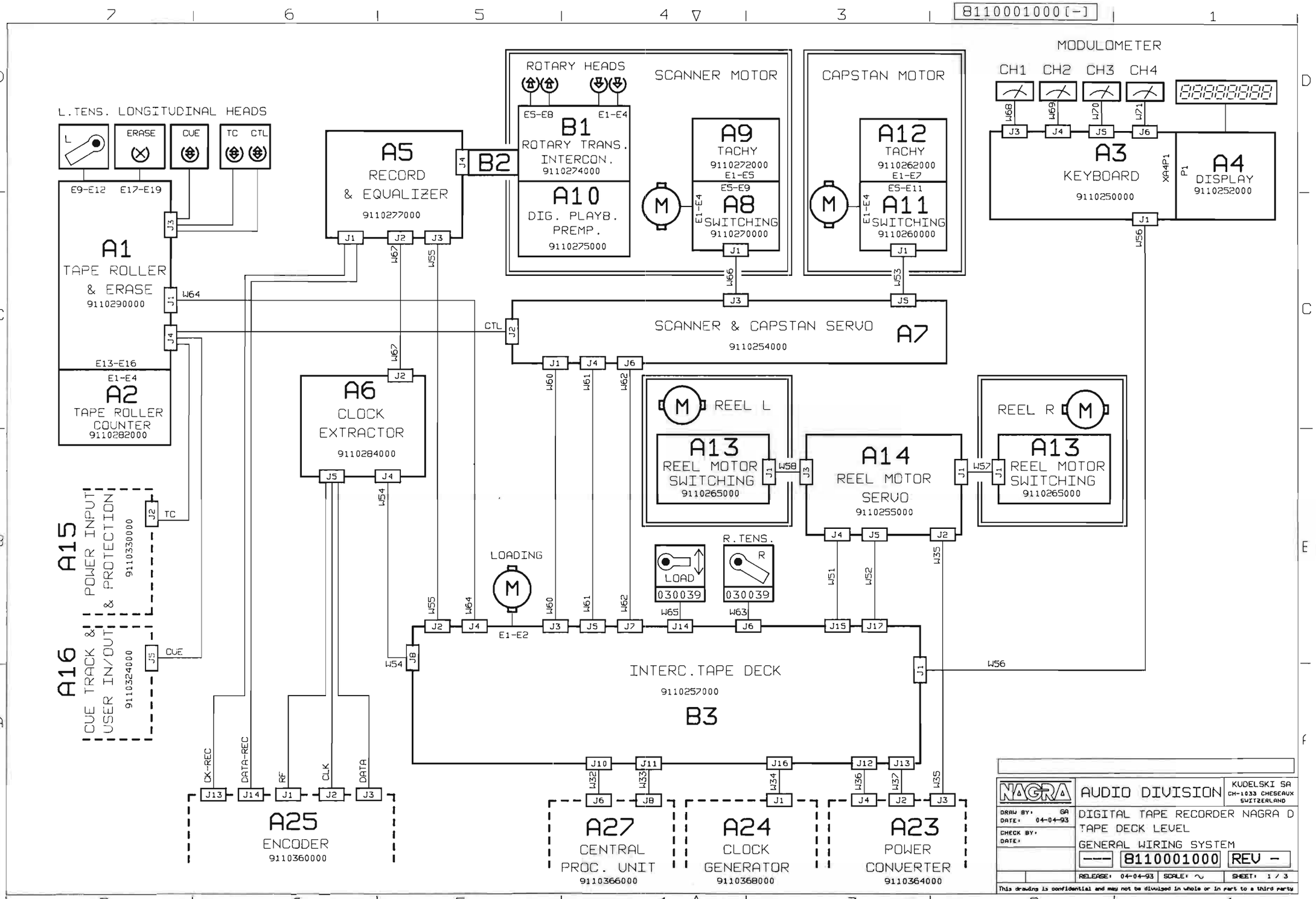
8110001000[-]
L.TENS. LONGITUDINAL HEADS
L
ERASE
CUE
TC CTL
E9-E12 E17-E19
A1
TAPE ROLLER
& ERASE
9110290000
E13-E16
E1-E4
A2
TAPE ROLLER
COUNTER
9110282000
A5
RECORD
& EQUALIZER
9110277000
B2
ROTARY HEADS
SCANNER MOTOR
E5-E8
E1-E4
B1
ROTARY TRANS.
INTERCON.
9110274000
A10
DIG. PLAYB.
PREMP.
9110275000
A9
TACHY
9110272000
E1-E5
E5-E9
A8
SWITCHING
9110270000
E1-E4
CAPSTAN MOTOR
A12
TACHY
9110262000
E1-E7
E5-E11
A11
SWITCHING
9110260000
MODULOMETER
CH1 CH2 CH3 CH4
A3
KEYBOARD
9110250000
XA4P1
P1
A4
DISPLAY
9110252000
SCANNER & CAPSTAN SERVO
9110254000
A7
CTL
A6
CLOCK
EXTRACTOR
9110284000
REEL L
A13
REEL MOTOR
SWITCHING
9110265000
A14
REEL MOTOR
SERVO
9110255000
REEL R
A13
REEL MOTOR
SWITCHING
9110265000
A15
POWER INPUT
& PROTECTION
9110330000
TC
A16
CUE TRACK &
USER IN/OUT
9110324000
CUE
LOADING
LOAD
030039
R.TENS.
R
030039
E1-E2
INTERC.TAPE DECK
9110257000
B3
CK-REC
DATA-REC
RF
CLK
DATA
A25
ENCODER
9110360000
A27
CENTRAL
PROC. UNIT
9110366000
A24
CLOCK
GENERATOR
9110368000
A23
POWER
CONVERTER
9110364000
NAGRA
AUDIO DIVISION
KUDELSKI SA
CH-1033 CHESEAUX
SWITZERLAND
DRAW BY: SA
DATE: 04-04-93
CHECK BY:
DATE:
DIGITAL TAPE RECORDER NAGRA D
TAPE DECK LEVEL
GENERAL WIRING SYSTEM
8110001000
REV -
RELEASE: 04-04-93
SCALE: ~
SHEET: 1 / 3
This drawing is confidential and may not be divulged in whole or in part to a third party

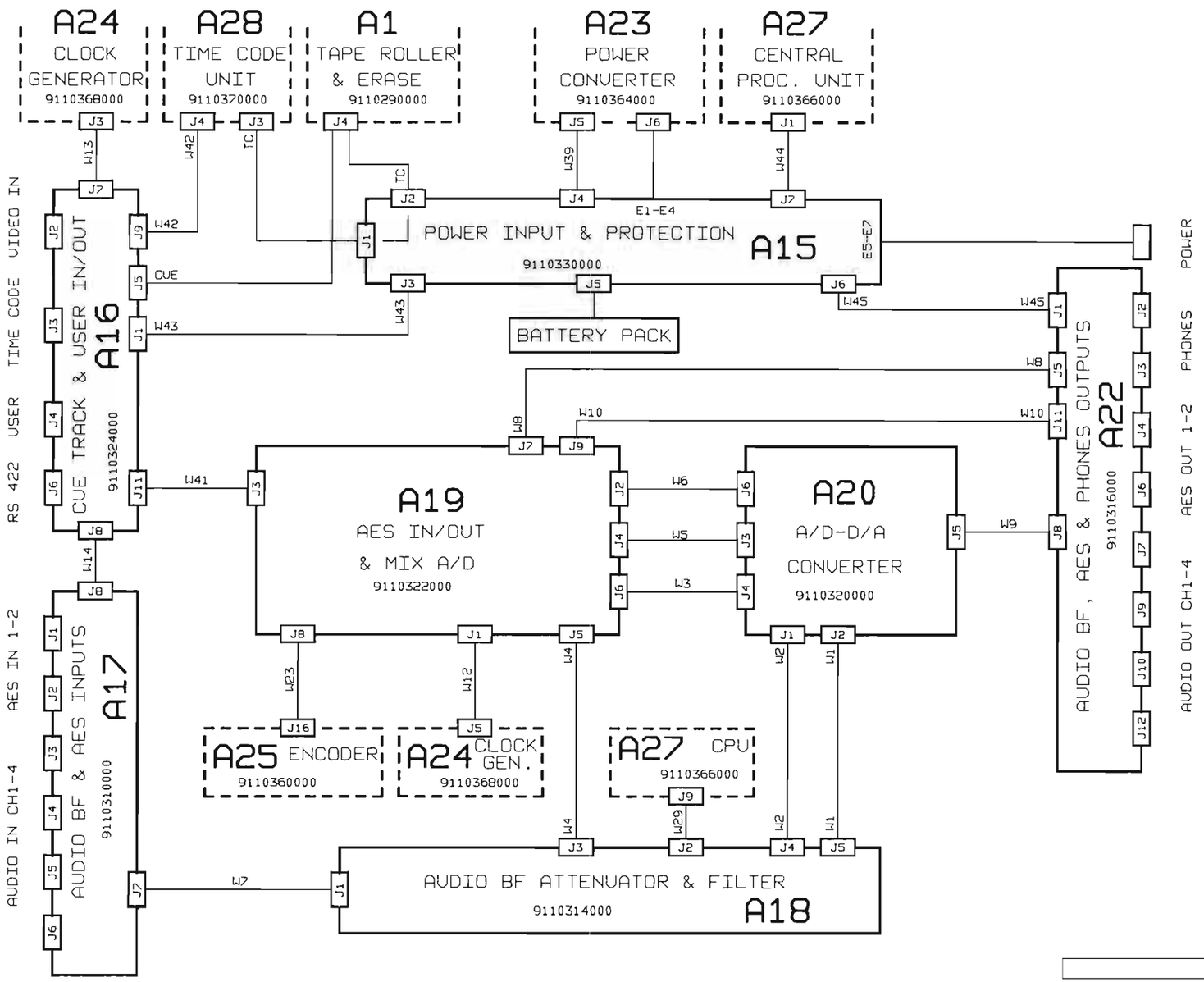

NAGRA AUDIO DIVISION
KUDELSKI SA
CH-1033 CHESEAUX
SWITZERLAND

DRAW BY: GA
DATE: 04-04-93
CHECK BY:
DATE:

DIGITAL TAPE RECORDER NAGRA D
MIDDLE LEVEL
GENERAL WIRING SYSTEM

--- 8110001000 REV -

RELEASE: 04-04-93 SCALE: ~ SHEET: 2 / 3

This drawing is confidential and may not be divulged in whole or in part to a third party

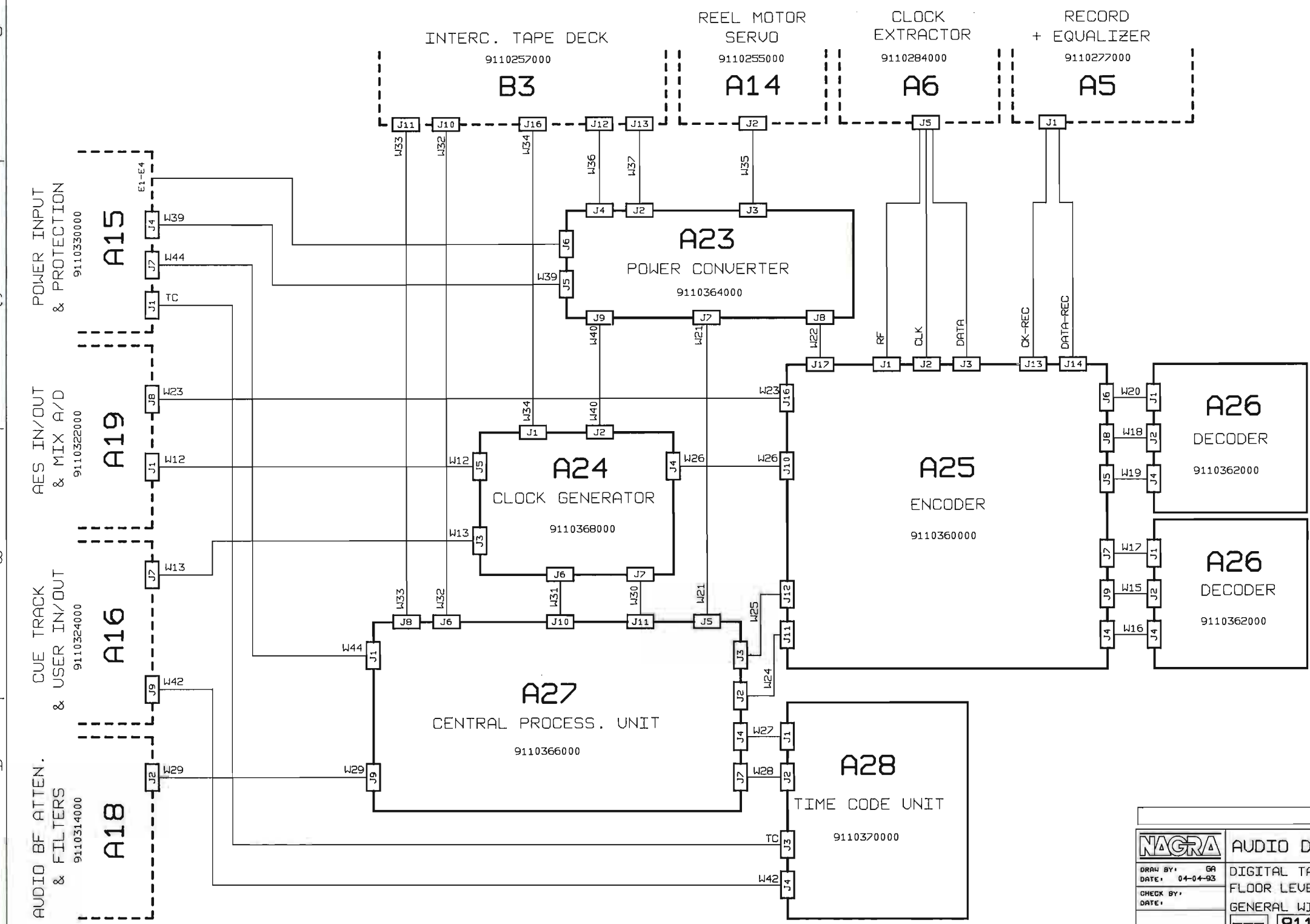

NAGRA

NAGRA	AUDIO DIVISION	KUDELSKI SA CH-1033 CHESEAUX SWITZERLAND
DRAW BY: GA DATE: 04-04-93	DIGITAL TAPE RECORDER NAGRA D FLOOR LEVEL	
CHECK BY: DATE:	GENERAL WIRING SYSTEM	
	--- 8110001000	REV -
	RELEASE: 04-04-93 SCALE: ~	SHEET: 3 / 3

This drawing is confidential and may not be divulged in whole or in part to a third party

NAGRA D * 8110001000 [-] *

WIRING PART LIST (LISTE DES CONNECTIONS)
NAGRA D : GENERAL WIRING SYSTEM

DATE : 04-04-93 / GA

```
*****************************************************************
*  WIRING PART LIST VALID FOR 8110001000 OF INDEX               *
*  ( LISTE DE PIECES VALABLE POUR INDICE ) * [-] *              *
*  REVISED (MISE A JOUR) DATE:          VISA:                   *
*                                                               *
*****************************************************************
```

CABLE	FROM	DESCRIPTION	TO
W 1	A18/J5-1	GND	A20/J2-8
W 1	A18/J5-2	A/D-IN4	A20/J2-7
W 1	A18/J5-3	GND	A20/J2-6
W 1	A18/J5-4	NOT USED	A20/J2-5
W 1	A18/J5-5	NOT USED	A20/J2-4
W 1	A18/J5-6	GND	A20/J2-3
W 1	A18/J5-7	A/D-IN3	A20/J2-2
W 1	A18/J5-8	GND	A20/J2-1
W 2	A18/J4-1	GND	A20/J1-8
W 2	A18/J4-2	A/D-IN2	A20/J1-7
W 2	A18/J4-3	GND	A20/J1-6
W 2	A18/J4-4	NOT USED	A20/J1-5
W 2	A18/J4-5	NOT USED	A20/J1-4
W 2	A18/J4-6	GND	A20/J1-3
W 2	A18/J4-7	A/D-IN1	A20/J1-2
W 2	A18/J4-8	GND	A20/J1-1
W 3	A19/J6-1	H-256FS+	A20/J4-1
W 3	A19/J6-2	H-256FS-	A20/J4-2
W 3	A19/J6-3	GND	A20/J4-3
W 3	A19/J6-4	NOT USED	A20/J4-4
W 3	A19/J6-5	128FS	A20/J4-5
W 3	A19/J6-6	DATA-DA 1/2	A20/J4-6
W 3	A19/J6-7	64FS*	A20/J4-7
W 3	A19/J6-8	SPARE	A20/J4-8
W 3	A19/J6-9	DATA-DA 3/4	A20/J4-9
W 3	A19/J6-10	GND	A20/J4-10
W 3	A19/J6-11	GND	A20/J4-11
W 3	A19/J6-12	DATA-AD 3/4	A20/J4-12
W 3	A19/J6-13	64FS	A20/J4-13
W 3	A19/J6-14	FS	A20/J4-14
W 3	A19/J6-15	DATA-AD 1/2	A20/J4-15
W 3	A19/J6-16	GND	A20/J4-16
W 4	A18/J3-1	SER-DATA	A19/J5-8
W 4	A18/J3-2	SER-CK	A19/J5-7
W 4	A18/J3-3	SER-EN	A19/J5-6
W 4	A18/J3-4	LOAD-AES	A19/J5-5
W 4	A18/J3-5	STB-10	A19/J5-4
W 4	A18/J3-6	-15V	A19/J5-3
W 4	A18/J3-7	+5V	A19/J5-2
W 4	A18/J3-8	+15V	A19/J5-1

CABLE	FROM	DESCRIPTION	TO
W 5	A19/J4-1	A1-NPC	A20/J3-1
W 5	A19/J4-2	A2-NPC	A20/J3-2
W 5	A19/J4-3	A3-NPC	A20/J3-3
W 5	A19/J4-4	SER-DATA-NPC	A20/J3-4
W 5	A19/J4-5	MUTE-NPC	A20/J3-5
W 5	A19/J4-6	SER-CK-NPC	A20/J3-6
W 5	A19/J4-7	SPARE	A20/J3-7
W 5	A19/J4-8	RESET-AD	A20/J3-8
W 5	A19/J4-9	EMPH3	A20/J3-9
W 5	A19/J4-10	EMPH4	A20/J3-10
W 5	A19/J4-11	EMPH1	A20/J3-11
W 5	A19/J4-12	EMPH2	A20/J3-12
W 6	A19/J2-1	+5V	A20/J6-1
W 6	A19/J2-2	+5V	A20/J6-2
W 6	A19/J2-3	GND	A20/J6-3
W 6	A19/J2-4	GND	A20/J6-4
W 6	A19/J2-5	-5V	A20/J6-5
W 6	A19/J2-6	-5V	A20/J6-6
W 6	A19/J2-7	+15V	A20/J6-7
W 6	A19/J2-8	+15V	A20/J6-8
W 6	A19/J2-9	GND	A20/J6-9
W 6	A19/J2-10	GND	A20/J6-10
W 6	A19/J2-11	-15V	A20/J6-11
W 6	A19/J2-12	-15V	A20/J6-12
W 7	A17/J7-1	GND	A18/J1-1
W 7	A17/J7-2	CH4-H	A18/J1-2
W 7	A17/J7-3	CH4-L	A18/J1-3
W 7	A17/J7-4	GND	A18/J1-4
W 7	A17/J7-5	CH3-H	A18/J1-5
W 7	A17/J7-6	CH3-L	A18/J1-6
W 7	A17/J7-7	GND	A18/J1-7
W 7	A17/J7-8	CH2-H	A18/J1-8
W 7	A17/J7-9	CH2-L	A18/J1-9
W 7	A17/J7-10	GND	A18/J1-10
W 7	A17/J7-11	CH1-H	A18/J1-11
W 7	A17/J7-12	CH1-L	A18/J1-12
W 8	A19/J7-1	AESOUT 3/4 LO	A22/J5-1
W 8	A19/J7-2	AESOUT 3/4 HI	A22/J5-2
W 8	A19/J7-3	GND	A22/J5-3
W 8	A19/J7-4	SPARE	A22/J5-4
W 8	A19/J7-5	SPARE	A22/J5-5
W 8	A19/J7-6	GND	A22/J5-6
W 8	A19/J7-7	AESOUT 1/2 LO	A22/J5-7
W 8	A19/J7-8	AESOUT 1/2 HI	A22/J5-8
W 9	A20/J5-1	OUT-CH4	A22/J8-1
W 9	A20/J5-2	GND	A22/J8-2
W 9	A20/J5-3	GND	A22/J8-3
W 9	A20/J5-4	OUT-CH3	A22/J8-4
W 9	A20/J5-5	GND	A22/J8-5
W 9	A20/J5-6	GND	A22/J8-6
W 9	A20/J5-7	OUT-CH2	A22/J8-7
W 9	A20/J5-8	GND	A22/J8-8
W 9	A20/J5-9	GND	A22/J8-9
W 9	A20/J5-10	OUT-CH1	A22/J8-10
W 9	A20/J5-11	GND	A22/J8-11
W 9	A20/J5-12	GND	A22/J8-12

CABLE	FROM	DESCRIPTION	TO
W10	A19/J9-1	SER-DATA-AES	A22/J11-1
W10	A19/J9-2	SER-CK	A22/J11-2
W10	A19/J9-3	SER-EN	A22/J11-3
W10	A19/J9-4	STB-10	A22/J11-4
W10	A19/J9-5	GND	A22/J11-5
W10	A19/J9-6	SPARE	A22/J11-6
W10	A19/J9-7	SPARE	A22/J11-7
W10	A19/J9-8	SPARE	A22/J11-8
W12	A19/J1-1	H-256FS+	A24/J5-12
W12	A19/J1-2	H-256FS-	A24/J5-11
W12	A19/J1-3	GND	A24/J5-10
W12	A19/J1-4	FS	A24/J5-9
W12	A19/J1-5	32FS	A24/J5-8
W12	A19/J1-6	H-96FS*	A24/J5-7
W12	A19/J1-7	GND	A24/J5-6
W12	A19/J1-8	NOT USED	A24/J5-5
W12	A19/J1-9	H-12MHZ	A24/J5-4
W12	A19/J1-10	GND	A24/J5-3
W12	A19/J1-11	FSYNC-AES 1/2	A24/J5-2
W12	A19/J1-12	FSYNC-AES 3/4	A24/J5-1
W13	A16/J7-1	TXA-	A24/J3-1
W13	A16/J7-2	TXA+	A24/J3-2
W13	A16/J7-3	RXA-	A24/J3-3
W13	A16/J7-4	RXA+	A24/J3-4
W13	A16/J7-5	GND	A24/J3-5
W13	A16/J7-6	HSREF	A24/J3-6
W13	A16/J7-7	L/REXT	A24/J3-7
W13	A16/J7-8	SPARE	A24/J3-8
W14	A16/J8-1	AES IN 1/2 HI	A17/J8-1
W14	A16/J8-2	AES IN 1/2 LO	A17/J8-2
W14	A16/J8-3	GND	A17/J8-3
W14	A16/J8-4	+12VMIC	A17/J8-4
W14	A16/J8-5	+48VMIC	A17/J8-5
W14	A16/J8-6	GND	A17/J8-6
W14	A16/J8-7	AES IN 3/4 HI	A17/J8-7
W14	A16/J8-8	AES IN 3/4 LO	A17/J8-8
W15	A25/J9-1	HD0	A26/J2-16
W15	A25/J9-2	HD1	A26/J2-15
W15	A25/J9-3	HD2	A26/J2-14
W15	A25/J9-4	HD3	A26/J2-13
W15	A25/J9-5	HD4	A26/J2-12
W15	A25/J9-6	HD5	A26/J2-11
W15	A25/J9-7	HD6	A26/J2-10
W15	A25/J9-8	HD7	A26/J2-9
W15	A25/J9-9	ADUAL0	A26/J2-8
W15	A25/J9-10	ADUAL1	A26/J2-7
W15	A25/J9-11	ADUAL2	A26/J2-6
W15	A25/J9-12	ADUAL3	A26/J2-5
W15	A25/J9-13	ADUAL4	A26/J2-4
W15	A25/J9-14	ADUAL5	A26/J2-3
W15	A25/J9-15	ADUAL6	A26/J2-2
W15	A25/J9-16	ADUAL7	A26/J2-1

CABLE	FROM	DESCRIPTION	TO
W16	A25/J4-1	IDUAL	A26/J4-16
W16	A25/J4-2	H-W.PB1	A26/J4-15
W16	A25/J4-3	FSYNC-DSP1.2	A26/J4-14
W16	A25/J4-4	CK-DSP1.2	A26/J4-13
W16	A25/J4-5	DATA-DSP2	A26/J4-12
W16	A25/J4-6	DDUAL10	A26/J4-11
W16	A25/J4-7	DDUAL9	A26/J4-10
W16	A25/J4-8	DDUAL8	A26/J4-9
W16	A25/J4-9	DDUAL7	A26/J4-8
W16	A25/J4-10	DDUAL6	A26/J4-7
W16	A25/J4-11	DDUAL5	A26/J4-6
W16	A25/J4-12	DDUAL4	A26/J4-5
W16	A25/J4-13	DDUAL3	A26/J4-4
W16	A25/J4-14	DDUAL2	A26/J4-3
W16	A25/J4-15	DDUAL1	A26/J4-2
W16	A25/J4-16	DDUAL0	A26/J4-1
W17	A25/J7-1	HA0	A26/J1-20
W17	A25/J7-2	HA1	A26/J1-19
W17	A25/J7-3	HA2	A26/J1-18
W17	A25/J7-4	W-DSP*	A26/J1-17
W17	A25/J7-5	IRQ-DSP2*	A26/J1-16
W17	A25/J7-6	EN-DSP2*	A26/J1-15
W17	A25/J7-7	GND	A26/J1-14
W17	A25/J7-8	H-W.PB2	A26/J1-13
W17	A25/J7-9	RST-DSP2*	A26/J1-12
W17	A25/J7-10	RD2*	A26/J1-11
W17	A25/J7-11	DSP2T*	A26/J1-10
W17	A25/J7-12	READY1	A26/J1-9
W17	A25/J7-13	PWD1*	A26/J1-8
W17	A25/J7-14	DONE1	A26/J1-7
W17	A25/J7-15	DPGA4	A26/J1-6
W17	A25/J7-16	CKPGA1	A26/J1-5
W17	A25/J7-17	+5V	A26/J1-4
W17	A25/J7-18	+5V	A26/J1-3
W17	A25/J7-19	EDSP2	A26/J1-2
W17	A25/J7-20	GND	A26/J1-1
W18	A25/J8-1	HD0	A26/J2-16
W18	A25/J8-2	HD1	A26/J2-15
W18	A25/J8-3	HD2	A26/J2-14
W18	A25/J8-4	HD3	A26/J2-13
W18	A25/J8-5	HD4	A26/J2-12
W18	A25/J8-6	HD5	A26/J2-11
W18	A25/J8-7	HD6	A26/J2-10
W18	A25/J8-8	HD7	A26/J2-9
W18	A25/J8-9	ADUAL0	A26/J2-8
W18	A25/J8-10	ADUAL1	A26/J2-7
W18	A25/J8-11	ADUAL2	A26/J2-6
W18	A25/J8-12	ADUAL3	A26/J2-5
W18	A25/J8-13	ADUAL4	A26/J2-4
W18	A25/J8-14	ADUAL5	A26/J2-3
W18	A25/J8-15	ADUAL6	A26/J2-2
W18	A25/J8-16	ADUAL7	A26/J2-1

CABLE	FROM	DESCRIPTION	TO
W19	A25/J5-1	IDUAL	A26/J4-16
W19	A25/J5-2	H-W.PB2	A26/J4-15
W19	A25/J5-3	FSYNC-DSP1.2	A26/J4-14
W19	A25/J5-4	CK-DSP1.2	A26/J4-13
W19	A25/J5-5	DATA-DSP1	A26/J4-12
W19	A25/J5-6	DDUAL10	A26/J4-11
W19	A25/J5-7	DDUAL9	A26/J4-10
W19	A25/J5-8	DDUAL8	A26/J4-9
W19	A25/J5-9	DDUAL7	A26/J4-8
W19	A25/J5-10	DDUAL6	A26/J4-7
W19	A25/J5-11	DDUAL5	A26/J4-6
W19	A25/J5-12	DDUAL4	A26/J4-5
W19	A25/J5-13	DDUAL3	A26/J4-4
W19	A25/J5-14	DDUAL2	A26/J4-3
W19	A25/J5-15	DDUAL1	A26/J4-2
W19	A25/J5-16	DDUAL0	A26/J4-1
W20	A25/J6-1	HA0	A26/J1-20
W20	A25/J6-2	HA1	A26/J1-19
W20	A25/J6-3	HA2	A26/J1-18
W20	A25/J6-4	W-DSP*	A26/J1-17
W20	A25/J6-5	IRQ-DSP1*	A26/J1-16
W20	A25/J6-6	EN-DSP1*	A26/J1-15
W20	A25/J6-7	GND	A26/J1-14
W20	A25/J6-8	H-W.PB1	A26/J1-13
W20	A25/J6-9	RST-DSP1*	A26/J1-12
W20	A25/J6-10	RD1*	A26/J1-11
W20	A25/J6-11	DSP1T*	A26/J1-10
W20	A25/J6-12	READY1	A26/J1-9
W20	A25/J6-13	PWD1*	A26/J1-8
W20	A25/J6-14	DONE1	A26/J1-7
W20	A25/J6-15	DPGA4	A26/J1-6
W20	A25/J6-16	CKPGA1	A26/J1-5
W20	A25/J6-17	+5V	A26/J1-4
W20	A25/J6-18	+5V	A26/J1-3
W20	A25/J6-19	FDSP1	A26/J1-2
W20	A25/J6-20	GND	A26/J1-1
W21	A23/J7-1	SER-EN	A27/J5-12
W21	A23/J7-2	SER-CK	A27/J5-11
W21	A23/J7-3	SER-DATA	A27/J5-10
W21	A23/J7-4	STB-8	A27/J5-9
W21	A23/J7-5	A/D-P5	A27/J5-8
W21	A23/J7-6	-5V	A27/J5-7
W21	A23/J7-7	+5V	A27/J5-6
W21	A23/J7-8	+12V	A27/J5-5
W21	A23/J7-9	GND	A27/J5-4
W21	A23/J7-10	GND	A27/J5-3
W21	A23/J7-11	CK-DCDC	A27/J5-2
W21	A23/J7-12	POWER ON/OFF	A27/J5-1
W22	A23/J8-1	+5V	A25/J17-8
W22	A23/J8-2	+5V	A25/J17-7
W22	A23/J8-3	+5V	A25/J17-6
W22	A23/J8-4	+5V	A25/J17-5
W22	A23/J8-5	GND	A25/J17-4
W22	A23/J8-6	GND	A25/J17-3
W22	A23/J8-7	GND	A25/J17-2
W22	A23/J8-8	GND	A25/J17-1

CABLE	FROM	DESCRIPTION	TO
W23	A19/J8-1	GND	A25/J16-12
W23	A19/J8-2	FSYNC-DSP1/2	A25/J16-11
W23	A19/J8-3	48FS	A25/J16-10
W23	A19/J8-4	DATA-DSP1	A25/J16-9
W23	A19/J8-5	DATA-DSP2	A25/J16-8
W23	A19/J8-6	GND	A25/J16-7
W23	A19/J8-7	FA1	A25/J16-6
W23	A19/J8-8	FA0	A25/J16-5
W23	A19/J8-9	FSYNC-DSP0	A25/J16-4
W23	A19/J8-10	DATA-DSP0	A25/J16-3
W23	A19/J8-11	H-96FS	A25/J16-2
W23	A19/J8-12	GND	A25/J16-1
W24	A25/J11-1	GND	A27/J2-20
W24	A25/J11-2	GND	A27/J2-19
W24	A25/J11-3	SPARE	A27/J2-18
W24	A25/J11-4	SPARE	A27/J2-17
W24	A25/J11-5	SPARE	A27/J2-16
W24	A25/J11-6	WR-DSP*	A27/J2-15
W24	A25/J11-7	A0	A27/J2-14
W24	A25/J11-8	A1	A27/J2-13
W24	A25/J11-9	A2	A27/J2-12
W24	A25/J11-10	RST-DSP0*	A27/J2-11
W24	A25/J11-11	RST-DSP1*	A27/J2-10
W24	A25/J11-12	RST-DSP2*	A27/J2-9
W24	A25/J11-13	IRQ-DSP0*	A27/J2-8
W24	A25/J11-14	IRQ-DSP1*	A27/J2-7
W24	A25/J11-15	IRQ-DSP2*	A27/J2-6
W24	A25/J11-16	EN-DSP0*	A27/J2-5
W24	A25/J11-17	EN-DSP1*	A27/J2-4
W24	A25/J11-18	EN-DSP2*	A27/J2-3
W24	A25/J11-19	SPARE	A27/J2-2
W24	A25/J11-20	SPARE	A27/J2-1
W25	A25/J12-1	HD0	A27/J3-8
W25	A25/J12-2	HD1	A27/J3-7
W25	A25/J12-3	HD2	A27/J3-6
W25	A25/J12-4	HD3	A27/J3-5
W25	A25/J12-5	HD4	A27/J3-4
W25	A25/J12-6	HD5	A27/J3-3
W25	A25/J12-7	HD6	A27/J3-2
W25	A25/J12-8	HD7	A27/J3-1
W26	A24/J4-1	GND	A25/J10-1
W26	A24/J4-2	H-W.REC2	A25/J10-2
W26	A24/J4-3	H-W.REC1	A25/J10-3
W26	A24/J4-4	H-W.PB1	A25/J10-4
W26	A24/J4-5	H-W.PB2	A25/J10-5
W26	A24/J4-6	GND	A25/J10-6
W26	A24/J4-7	H-400FS	A25/J10-7
W26	A24/J4-8	GND	A25/J10-8

CABLE	FROM	DESCRIPTION	TO
W27	A27/J4-1	SPARE	A28/J1-1
W27	A27/J4-2	AD0	A28/J1-2
W27	A27/J4-3	AD1	A28/J1-3
W27	A27/J4-4	AD2	A28/J1-4
W27	A27/J4-5	AD3	A28/J1-5
W27	A27/J4-6	AD4	A28/J1-6
W27	A27/J4-7	AD5	A28/J1-7
W27	A27/J4-8	AD6	A28/J1-8
W27	A27/J4-9	AD7	A28/J1-9
W27	A27/J4-10	A0	A28/J1-10
W27	A27/J4-11	A1	A28/J1-11
W27	A27/J4-12	A2	A28/J1-12
W27	A27/J4-13	A3	A28/J1-13
W27	A27/J4-14	A4	A28/J1-14
W27	A27/J4-15	A5	A28/J1-15
W27	A27/J4-16	A6	A28/J1-16
W27	A27/J4-17	A7	A28/J1-17
W27	A27/J4-18	A8	A28/J1-18
W27	A27/J4-19	A9	A28/J1-19
W27	A27/J4-20	SPARE	A28/J1-20
W28	A27/J7-1	+5V	A28/J2-1
W28	A27/J7-2	-5V	A28/J2-2
W28	A27/J7-3	+VBB	A28/J2-3
W28	A27/J7-4	+12V	A28/J2-4
W28	A27/J7-5	GND	A28/J2-5
W28	A27/J7-6	GND	A28/J2-6
W28	A27/J7-7	CS-DRAM*	A28/J2-7
W28	A27/J7-8	RD*	A28/J2-8
W28	A27/J7-9	WR*	A28/J2-9
W28	A27/J7-10	BUSY-DP*	A28/J2-10
W28	A27/J7-11	IRQ-DP*	A28/J2-11
W28	A27/J7-12	RESET*	A28/J2-12
W28	A27/J7-13	H-14MHZ	A28/J2-13
W28	A27/J7-14	FS	A28/J2-14
W28	A27/J7-15	CK-ROLL	A28/J2-15
W28	A27/J7-16	U/D-ROLL	A28/J2-16
W29	A18/J2-1	SER-DATA	A27/J9-1
W29	A18/J2-2	SER-CK	A27/J9-2
W29	A18/J2-3	SER-EN	A27/J9-3
W29	A18/J2-4	STB-9	A27/J9-4
W29	A18/J2-5	A/D-P6	A27/J9-5
W29	A18/J2-6	STB-10	A27/J9-6
W29	A18/J2-7	LOAD-AES	A27/J9-7
W29	A18/J2-8	SPARE	A27/J9-8

CABLE	FROM	DESCRIPTION	TO
W30	A24/J7-1	GND	A27/J11-16
W30	A24/J7-2	GND	A27/J11-15
W30	A24/J7-3	A/D-P7	A27/J11-14
W30	A24/J7-4	NOT USED	A27/J11-13
W30	A24/J7-5	A3	A27/J11-12
W30	A24/J7-6	A2	A27/J11-11
W30	A24/J7-7	A1	A27/J11-10
W30	A24/J7-8	A0	A27/J11-9
W30	A24/J7-9	AD7	A27/J11-8
W30	A24/J7-10	AD6	A27/J11-7
W30	A24/J7-11	AD5	A27/J11-6
W30	A24/J7-12	AD4	A27/J11-5
W30	A24/J7-13	AD3	A27/J11-4
W30	A24/J7-14	AD2	A27/J11-3
W30	A24/J7-15	AD1	A27/J11-2
W30	A24/J7-16	AD0	A27/J11-1
W31	A24/J6-1	TXA-	A27/J10-16
W31	A24/J6-2	TXA+	A27/J10-15
W31	A24/J6-3	RXA-	A27/J10-14
W31	A24/J6-4	RXA+	A27/J10-13
W31	A24/J6-5	IRQ-GENCK*	A27/J10-12
W31	A24/J6-6	CK-DCDC	A27/J10-11
W31	A24/J6-7	GND	A27/J10-10
W31	A24/J6-8	H-CPU	A27/J10-9
W31	A24/J6-9	H-14MHZ	A27/J10-8
W31	A24/J6-10	GND	A27/J10-7
W31	A24/J6-11	WR*	A27/J10-6
W31	A24/J6-12	RD*	A27/J10-5
W31	A24/J6-13	CS-GENCK*	A27/J10-4
W31	A24/J6-14	H-W.REF-1/T	A27/J10-3
W31	A24/J6-15	RESET*	A27/J10-2
W31	A24/J6-16	FS	A27/J10-1
W32	A27/J6-1	A/D-P4	B3/J10-1
W32	A27/J6-2	A/D-P1	B3/J10-2
W32	A27/J6-3	CK-ROLL	B3/J10-3
W32	A27/J6-4	U/D-ROLL	B3/J10-4
W32	A27/J6-5	CK-LCD	B3/J10-5
W32	A27/J6-6	LOAD-KYBD	B3/J10-6
W32	A27/J6-7	STB-7*	B3/J10-7
W32	A27/J6-8	DATA-LCD	B3/J10-8
W32	A27/J6-9	KEY-POWER	B3/J10-9
W32	A27/J6-10	BUSY-LCD	B3/J10-10
W32	A27/J6-11	NOT USED	B3/J10-11
W32	A27/J6-12	A/D-P2	B3/J10-12
W33	A27/J8-1	STB-1	B3/J11-1
W33	A27/J8-2	HSI-1	B3/J11-2
W33	A27/J8-3	STB-5*	B3/J11-3
W33	A27/J8-4	STB-3*	B3/J11-4
W33	A27/J8-5	STB-4	B3/J11-5
W33	A27/J8-6	SER-CK	B3/J11-6
W33	A27/J8-7	SER-DATA	B3/J11-7
W33	A27/J8-8	SER-EN	B3/J11-8
W33	A27/J8-9	HSI-2	B3/J11-9
W33	A27/J8-10	HSI-3	B3/J11-10
W33	A27/J8-11	STB-2*	B3/J11-11
W33	A27/J8-12	NOT USED	B3/J11-12

CABLE	FROM	DESCRIPTION	TO
W34	A24/J1-1	SPARE	B3/J16-1
W34	A24/J1-2	GND	B3/J16-2
W34	A24/J1-3	H-W.REF-1/T	B3/J16-3
W34	A24/J1-4	H-W.REC-INH	B3/J16-4
W34	A24/J1-5	H-W.REC-I2	B3/J16-5
W34	A24/J1-6	H-W.REC-I1	B3/J16-6
W34	A24/J1-7	H-T.DECK	B3/J16-7
W34	A24/J1-8	H-W.PB1	B3/J16-8
W34	A24/J1-9	H-W.PB2	B3/J16-9
W34	A24/J1-10	GND	B3/J16-10
W34	A24/J1-11	H-NYC/16	B3/J16-11
W34	A24/J1-12	H-8KHZ	B3/J16-12
W35	A14/J2-1	-LRMOT	A23/J3-1
W35	A14/J2-2	+LRMOT	A23/J3-2
W35	A14/J2-3	LRCIN	A23/J3-3
W35	A14/J2-4	LHSD	A23/J3-4
W35	A14/J2-5	+UNREG	A23/J3-5
W35	A14/J2-6	SPARE	A23/J3-6
W35	A14/J2-7	+RRMOT	A23/J3-7
W35	A14/J2-8	RRCIN	A23/J3-8
W35	A14/J2-9	-RRMOT	A23/J3-9
W35	A14/J2-10	RHSD	A23/J3-10
W36	A23/J4-1	+12V	B3/J12-1
W36	A23/J4-2	+12V	B3/J12-2
W36	A23/J4-3	GND	B3/J12-3
W36	A23/J4-4	GND	B3/J12-4
W36	A23/J4-5	+UNR.LIGHT	B3/J12-5
W36	A23/J4-6	+5V	B3/J12-6
W36	A23/J4-7	-5V	B3/J12-7
W36	A23/J4-8	+10V	B3/J12-8
W36	A23/J4-9	+15V	B3/J12-9
W36	A23/J4-10	-15V	B3/J12-10
W37	A23/J2-1	ACCEL	B3/J13-1
W37	A23/J2-2	F-METER	B3/J13-2
W37	A23/J2-3	-CAPSMOT	B3/J13-3
W37	A23/J2-4	+CAPSMOT	B3/J13-4
W37	A23/J2-5	CAPSPEED	B3/J13-5
W37	A23/J2-6	SPARE	B3/J13-6
W37	A23/J2-7	SERVO	B3/J13-7
W37	A23/J2-8	START	B3/J13-8
W37	A23/J2-9	+SCANMOT	B3/J13-9
W37	A23/J2-10	-SCANMOT	B3/J13-10

CABLE	FROM	DESCRIPTION	TO
W39	A15/J4-1	CK BIAS CUE	A23/J5-1
W39	A15/J4-2	SPARE	A23/J5-2
W39	A15/J4-3	SPARE	A23/J5-3
W39	A15/J4-4	GND	A23/J5-4
W39	A15/J4-5	GND	A23/J5-5
W39	A15/J4-6	GND	A23/J5-6
W39	A15/J4-7	+10V	A23/J5-7
W39	A15/J4-8	+5V	A23/J5-8
W39	A15/J4-9	-15V	A23/J5-9
W39	A15/J4-10	-5V	A23/J5-10
W39	A15/J4-11	NOT USED	A23/J5-11
W39	A15/J4-12	+15V	A23/J5-12
W39	A15/J4-13	GND	A23/J5-13
W39	A15/J4-14	-10VMIC	A23/J5-14
W39	A15/J4-15	+12VMIC	A23/J5-15
W39	A15/J4-16	+48VMIC	A23/J5-16
W40	A23/J9-1	GND	A24/J2-8
W40	A23/J9-2	GND	A24/J2-7
W40	A23/J9-3	-5V	A24/J2-6
W40	A23/J9-4	-5V	A24/J2-5
W40	A23/J9-5	+10V	A24/J2-4
W40	A23/J9-6	+10V	A24/J2-3
W40	A23/J9-7	+5V	A24/J2-2
W40	A23/J9-8	+5V	A24/J2-1
W41	A16/J11-1	+5V	A19/J3-12
W41	A16/J11-2	-5V	A19/J3-11
W41	A16/J11-3	+15V	A19/J3-10
W41	A16/J11-4	-15V	A19/J3-9
W41	A16/J11-5	AES IN 1/2 HI	A19/J3-8
W41	A16/J11-6	AES IN 1/2 LO	A19/J3-7
W41	A16/J11-7	GND	A19/J3-6
W41	A16/J11-8	SPARE	A19/J3-5
W41	A16/J11-9	SPARE	A19/J3-4
W41	A16/J11-10	GND	A19/J3-3
W41	A16/J11-11	AES IN 3/4 HI	A19/J3-2
W41	A16/J11-12	AES IN 3/4 LO	A19/J3-1
W42	A16/J9-1	TC IN	A28/J4-1
W42	A16/J9-2	TC OUT	A28/J4-2
W42	A16/J9-3	GND	A28/J4-3
W42	A16/J9-4	VSYNC	A28/J4-4
W42	A16/J9-5	ODD/EVEN	A28/J4-5
W42	A16/J9-6	NOT USED	A28/J4-6
W42	A16/J9-7	NOT USED	A28/J4-7
W42	A16/J9-8	TC IN+	A28/J4-8
W42	A16/J9-9	TC IN-	A28/J4-9
W42	A16/J9-10	GND	A28/J4-10
W42	A16/J9-11	TC OUT+	A28/J4-11
W42	A16/J9-12	TC OUT-	A28/J4-12

CABLE	FROM	DESCRIPTION	TO
W43	A15/J3-1	+15V	A16/J1-1
W43	A15/J3-2	-15V	A16/J1-2
W43	A15/J3-3	GND	A16/J1-3
W43	A15/J3-4	+5V	A16/J1-4
W43	A15/J3-5	-5V	A16/J1-5
W43	A15/J3-6	+12VMIC	A16/J1-6
W43	A15/J3-7	+48VMIC	A16/J1-7
W43	A15/J3-8	-10VMIC	A16/J1-8
W43	A15/J3-9	GND	A16/J1-9
W43	A15/J3-10	CUE-SWITCH	A16/J1-10
W43	A15/J3-11	GND	A16/J1-11
W43	A15/J3-12	CUE-REC ALC	A16/J1-12
W43	A15/J3-13	GND	A16/J1-13
W43	A15/J3-14	CUE-PLAY	A16/J1-14
W43	A15/J3-15	CUE-VALID	A16/J1-15
W43	A15/J3-16	CK BIAS CUE	A16/J1-16
W44	A15/J7-1	SPARE	A27/J1-8
W44	A15/J7-2	SPARE	A27/J1-7
W44	A15/J7-3	SPARE	A27/J1-6
W44	A15/J7-4	BAT PRESENT	A27/J1-5
W44	A15/J7-5	+UBB	A27/J1-4
W44	A15/J7-6	NOT USED	A27/J1-3
W44	A15/J7-7	BEEP +	A27/J1-2
W44	A15/J7-8	BEEP-PHONE	A27/J1-1
W45	A15/J6-1	CUE	A22/J1-16
W45	A15/J6-2	GND	A22/J1-15
W45	A15/J6-3	CUE-RECORD	A22/J1-14
W45	A15/J6-4	GND	A22/J1-13
W45	A15/J6-5	CUE-PLAY	A22/J1-12
W45	A15/J6-6	GND	A22/J1-11
W45	A15/J6-7	CUE-VALID	A22/J1-10
W45	A15/J6-8	SPARE	A22/J1-9
W45	A15/J6-9	SPARE	A22/J1-8
W45	A15/J6-10	-5V	A22/J1-7
W45	A15/J6-11	+5V	A22/J1-6
W45	A15/J6-12	-15V	A22/J1-5
W45	A15/J6-13	+15V	A22/J1-4
W45	A15/J6-14	GND	A22/J1-3
W45	A15/J6-15	GND	A22/J1-2
W45	A15/J6-16	BEEP-PHONE	A22/J1-1
W51	A14/J4-1	+12V	B3/J15-1
W51	A14/J4-2	+12V	B3/J15-2
W51	A14/J4-3	SPARE	B3/J15-3
W51	A14/J4-4	GND	B3/J15-4
W51	A14/J4-5	GND	B3/J15-5
W51	A14/J4-6	+5V	B3/J15-6
W51	A14/J4-7	+15V	B3/J15-7
W51	A14/J4-8	SER-EN	B3/J15-8
W51	A14/J4-9	SER-DATA	B3/J15-9
W51	A14/J4-10	SER-CK	B3/J15-10
W51	A14/J4-11	A/D-P2	B3/J15-11
W51	A14/J4-12	STB-2*	B3/J15-12

CABLE	FROM	DESCRIPTION	TO
W52	A14/J5-1	H-T.DECK	B3/J17-1
W52	A14/J5-2	LDP	B3/J17-2
W52	A14/J5-3	SPARE	B3/J17-3
W52	A14/J5-4	ERASE ON	B3/J17-4
W52	A14/J5-5	RTP	B3/J17-5
W52	A14/J5-6	LTP	B3/J17-6
W52	A14/J5-7	TD1	B3/J17-7
W52	A14/J5-8	TD4	B3/J17-8
W52	A14/J5-9	+MOTLOAD	B3/J17-9
W52	A14/J5-10	-MOTLOAD	B3/J17-10
W52	A14/J5-11	HSI-3	B3/J17-11
W52	A14/J5-12	HSI-2	B3/J17-12
W53	A7/J5-1	LED2CAPS	A11/J1-1
W53	A7/J5-2	GND	A11/J1-2
W53	A7/J5-3	+12V	A11/J1-3
W53	A7/J5-4	SPARE	A11/J1-4
W53	A7/J5-5	TACHYCAB	A11/J1-5
W53	A7/J5-6	+TACHY	A11/J1-6
W53	A7/J5-7	SPARE	A11/J1-7
W53	A7/J5-8	-CAPSMOT	A11/J1-8
W53	A7/J5-9	SPARE	A11/J1-9
W53	A7/J5-10	SENSCAPS	A11/J1-10
W53	A7/J5-11	LED1CAPS	A11/J1-11
W53	A7/J5-12	+CAPSMOT	A11/J1-12
W54	A6/J4-1	+5V	B3/J8-8
W54	A6/J4-2	GND	B3/J8-7
W54	A6/J4-3	+10V	B3/J8-6
W54	A6/J4-4	-5V	B3/J8-5
W54	A6/J4-5	H-W.PB1	B3/J8-4
W54	A6/J4-6	H-W.PB2	B3/J8-3
W54	A6/J4-7	A/D-P4	B3/J8-2
W54	A6/J4-8	H-NYC/16	B3/J8-1
W55	A5/J3-1	GND	B3/J2-16
W55	A5/J3-2	+10V	B3/J2-15
W55	A5/J3-3	+15V	B3/J2-14
W55	A5/J3-4	+5V	B3/J2-13
W55	A5/J3-5	-5V	B3/J2-12
W55	A5/J3-6	SPARE	B3/J2-11
W55	A5/J3-7	H-W.REC-I1	B3/J2-10
W55	A5/J3-8	H-W.REC-I2	B3/J2-9
W55	A5/J3-9	H-W.REC-INH	B3/J2-8
W55	A5/J3-10	H-W.PB2	B3/J2-7
W55	A5/J3-11	H-W.PB1	B3/J2-6
W55	A5/J3-12	SER-EN	B3/J2-5
W55	A5/J3-13	SER-DATA	B3/J2-4
W55	A5/J3-14	SER-CK	B3/J2-3
W55	A5/J3-15	SPARE	B3/J2-2
W55	A5/J3-16	STB-3*	B3/J2-1

CABLE	FROM	DESCRIPTION	TO
W56	A3/J1-1	GND	B3/J1-16
W56	A3/J1-2	GND	B3/J1-15
W56	A3/J1-3	+15V	B3/J1-14
W56	A3/J1-4	+5V	B3/J1-13
W56	A3/J1-5	+UNR.LIGHT	B3/J1-12
W56	A3/J1-6	SPARE	B3/J1-11
W56	A3/J1-7	CK-LCD	B3/J1-10
W56	A3/J1-8	BUSY-LCD	B3/J1-9
W56	A3/J1-9	DATA-LCD	B3/J1-8
W56	A3/J1-10	STB-7*	B3/J1-7
W56	A3/J1-11	STB-4	B3/J1-6
W56	A3/J1-12	SER-EN	B3/J1-5
W56	A3/J1-13	SER-DATA	B3/J1-4
W56	A3/J1-14	SER-CK	B3/J1-3
W56	A3/J1-15	LOAD-KYBD	B3/J1-2
W56	A3/J1-16	KEY POWER	B3/J1-1
W57	A13/J1-1	+LRMOT	A14/J1-8
W57	A13/J1-2	GND	A14/J1-7
W57	A13/J1-3	+12V	A14/J1-6
W57	A13/J1-4	TACHY 1L	A14/J1-5
W57	A13/J1-5	TACHY 2L	A14/J1-4
W57	A13/J1-6	BIT LED L	A14/J1-3
W57	A13/J1-7	LHSD	A14/J1-2
W57	A13/J1-8	-LRMOT	A14/J1-1
W58	A13/J1-1	+RRMOT	A14/J3-8
W58	A13/J1-2	GND	A14/J3-7
W58	A13/J1-3	+12V	A14/J3-6
W58	A13/J1-4	TACHY 1R	A14/J3-5
W58	A13/J1-5	TACHY 2R	A14/J3-4
W58	A13/J1-6	BIT LED R	A14/J3-3
W58	A13/J1-7	RHSD	A14/J3-2
W58	A13/J1-8	-RRMOT	A14/J3-1
W60	A7/J1-1	H-W.REF-1/T	B3/J3-1
W60	A7/J1-2	H.8KHZ	B3/J3-2
W60	A7/J1-3	SPARE	B3/J3-3
W60	A7/J1-4	STB-5*	B3/J3-4
W60	A7/J1-5	HSI-1	B3/J3-5
W60	A7/J1-6	A/D-P1	B3/J3-6
W60	A7/J1-7	SER-DATA	B3/J3-7
W60	A7/J1-8	SER-CK	B3/J3-8
W60	A7/J1-9	STB-1	B3/J3-9
W60	A7/J1-10	SER-EN	B3/J3-10
W61	A7/J4-1	ACCEL	B3/J5-1
W61	A7/J4-2	F-METER	B3/J5-2
W61	A7/J4-3	-CAPSMOT	B3/J5-3
W61	A7/J4-4	+CAPSMOT	B3/J5-4
W61	A7/J4-5	CAPSPEED	B3/J5-5
W61	A7/J4-6	SPARE	B3/J5-6
W61	A7/J4-7	SERVO	B3/J5-7
W61	A7/J4-8	START	B3/J5-8
W61	A7/J4-9	+SCANMOT	B3/J5-9
W61	A7/J4-10	-SCANMOT	B3/J5-10

CABLE	FROM	DESCRIPTION	TO
W62	A7/J6-1	+5V	B3/J7-1
W62	A7/J6-2	+12V	B3/J7-2
W62	A7/J6-3	+12V	B3/J7-3
W62	A7/J6-4	GND	B3/J7-4
W62	A7/J6-5	GND	B3/J7-5
W62	A7/J6-6	GND	B3/J7-6
W62	A7/J6-7	GND	B3/J7-7
W62	A7/J6-8	+15V	B3/J7-8
W63	B3/J6-1	TD4	B4/J1-1
W63	B3/J6-2	RTP	B4/J1-2
W63	B3/J6-3	GND	B4/J1-3
W63	B3/J6-4	TD3	B4/J1-4
W64	A1/J1-1	ERASE ON	B3/J4-1
W64	A1/J1-2	+5V	B3/J4-2
W64	A1/J1-3	TD1	B3/J4-3
W64	A1/J1-4	TD2	B3/J4-4
W64	A1/J1-5	GND	B3/J4-5
W64	A1/J1-6	LTP	B3/J4-6
W64	A1/J1-7	CK-ROLL	B3/J4-7
W64	A1/J1-8	U/D-ROLL	B3/J4-8
W64	A1/J1-9	+15V	B3/J4-9
W64	A1/J1-10	GND	B3/J4-10
W65	B3/J14-1	TD3	B4/J1-1
W65	B3/J14-2	TD2	B4/J1-2
W65	B3/J14-3	GND	B4/J1-3
W65	B3/J14-4	LDP	B4/J1-4
W66	A7/J3-1	GND	A8/J1-1
W66	A7/J3-2	+12V	A8/J1-2
W66	A7/J3-3	1/TSCAN	A8/J1-3
W66	A7/J3-4	TACHYSCAN	A8/J1-4
W66	A7/J3-5	+SCANMOT	A8/J1-5
W66	A7/J3-6	-SCANMOT	A8/J1-6
W66	A7/J3-7	LED1SCAN	A8/J1-7
W66	A7/J3-8	LED2SCAN	A8/J1-8
W67	A5/J2-1	EQUALIZED BF	A6/J2-3
W67	A5/J2-2	GND	A6/J2-2
W67	A5/J2-3	PB-HI/LO	A6/J2-1
W68	A3/J3-1	MODU.CH1 +	MODU.CH1 +
W68	A3/J3-2	MODU.CH1 -	MODU.CH1 -
W69	A3/J4-1	MODU.CH2 +	MODU.CH2 +
W69	A3/J4-2	MODU.CH2 -	MODU.CH2 -
W70	A3/J5-1	MODU.CH3 +	MODU.CH3 +
W70	A3/J5-2	MODU.CH3 -	MODU.CH3 -
W71	A3/J6-1	MODU.CH4 +	MODU.CH4 +
W71	A3/J6-2	MODU.CH4 -	MODU.CH4 -
CK-REC	A5/J1-1	CK-REC	A25/J13-1
CK-REC	A5/J1-2	GND	A25/J13-2
CLK	A6/J5-3	GND	A25/J2-2
CLK	A6/J5-4	CLK	A25/J2-1
CTL	A1/J4-6	GND	A7/J2-3
CTL	A1/J4-5	HEAD-CT+	A7/J2-2
CTL	A1/J4-4	HEAD-CT-	A7/J2-1
CUE	A1/J4-1	CUE HEAD+	A16/J5-1
CUE	A1/J4-2	GND	A16/J5-2
DATA	A6/J5-1	GND	A25/J3-2
DATA	A6/J5-2	DATA	A25/J3-1

CABLE	FROM	DESCRIPTION	TO
DATA-REC	A5/J1-3	GND	A25/J14-2
DATA-REC	A5/J1-4	DATA-REC	A25/J14-1
FLEX B2	A5/J4-1	ROTARY HEAD2A	B1
FLEX B2	A5/J4-2	ROTARY HEAD2B	B1
FLEX B2	A5/J4-3	ROTARY HEAD1B	B1
FLEX B2	A5/J4-4	ROTARY HEAD1A	B1
FLEX B2	A5/J4-5	+15V	B1
FLEX B2	A5/J4-6	PLAY-2	B1
FLEX B2	A5/J4-7	GND	B1
FLEX B2	A5/J4-8	PLAY-1	B1
LONG.HEAD	A1/J3-1	CUE HEAD+	CUE
LONG.HEAD	A1/J3-2	SPARE	
LONG.HEAD	A1/J3-4	HEAD-CT+	CTL
LONG.HEAD	A1/J3-3	TC-HEAD+	TC
LONG.HEAD	A1/J3-5	GND	CUE
LONG.HEAD	A1/J3-6	SPARE	
LONG.HEAD	A1/J3-8	HEAD-CT-	CTL
LONG.HEAD	A1/J3-7	TC-HEAD-	TC
PLUG1	A3/XA4P1-1	LCD BACKLIGHT	A4/P1-1
PLUG1	A3/XA4P1-2	GND	A4/P1-2
PLUG1	A3/XA4P1-3	+UNR.LIGHT	A4/P1-3
PLUG1	A3/XA4P1-4	+5V	A4/P1-4
PLUG1	A3/XA4P1-5	DATA-LCD	A4/P1-5
PLUG1	A3/XA4P1-6	CK-LCD	A4/P1-6
PLUG1	A3/XA4P1-7	LCD C/D	A4/P1-7
PLUG1	A3/XA4P1-8	LCD/CS	A4/P1-8
PLUG1	A3/XA4P1-9	SER-EN	A4/P1-9
PLUG1	A3/XA4P1-10	BUSY-LCD	A4/P1-10
PLUG2	A10/PLAY 1*	PLAY 1*	B1/PLAY 1*
PLUG2	A10/PLAY 1	PLAY 1	B1/PLAY 1
PLUG2	A10/PLAY 2*	PLAY 2*	B1/PLAY 2*
PLUG2	A10/PLAY 2	PLAY 2	B1/PLAY 2
PLUG2	A10/PLAY-1	PLAY-1	B1/PLAY-1
PLUG2	A10/GND	GND	B1/GND
PLUG2	A10/PLAY 2	PLAY 2	B1/PLAY 2
PLUG2	A10/+5V	+5V	B1/+5V
RF	A6/J5-5	GND	A25/J1-2
RF	A6/J5-6	RF	A25/J1-1
TC	A1/J4-3	GND	A15/J2-3
TC	A1/J4-8	TC-HEAD-	A15/J2-2
TC	A1/J4-7	TC-HEAD+	A15/J2-1
TC	A15/J1-1	TC-HEAD+	A28/J3-3
TC	A15/J1-2	TC-HEAD-	A28/J3-2
TC	A15/J1-3	GND	A28/J3-1
	A11/E5	GND	A12/E7
	A11/E6	+12V	A12/E6
	A11/E7	TACHYCAB	A12/E2
	A11/E8	+TACHY	A12/E3
	A11/E9	COMM2	A12/E5
	A11/E10	COMM1	A12/E1
	A11/E11	-LED	A12/E4
	A8/E6	1/T	A9/E4
	A8/E7	GND	A9/E5
	A8/E8	GND	A9/E3
	A8/E9	TACHY	A9/E1
	A8/E5	+12V	A9/E2

CABLE	FROM	DESCRIPTION	TO
	A1/E13	S1	A2/E2
	A1/E14	+5V	A2/E1
	A1/E15	GND	A2/E4
	A1/E16	S2	A2/E3
	A15/E1	+UNREG	A23/J6-2
	A15/E2	-BAT	A23/J6-1
	A15/E3	CONTROL	A23/J6-4
	A15/E4	-UNREG	A23/J6-3
		NOT USED	A23/J6-5
		SPARE	A23/J6-6

2

June 1994

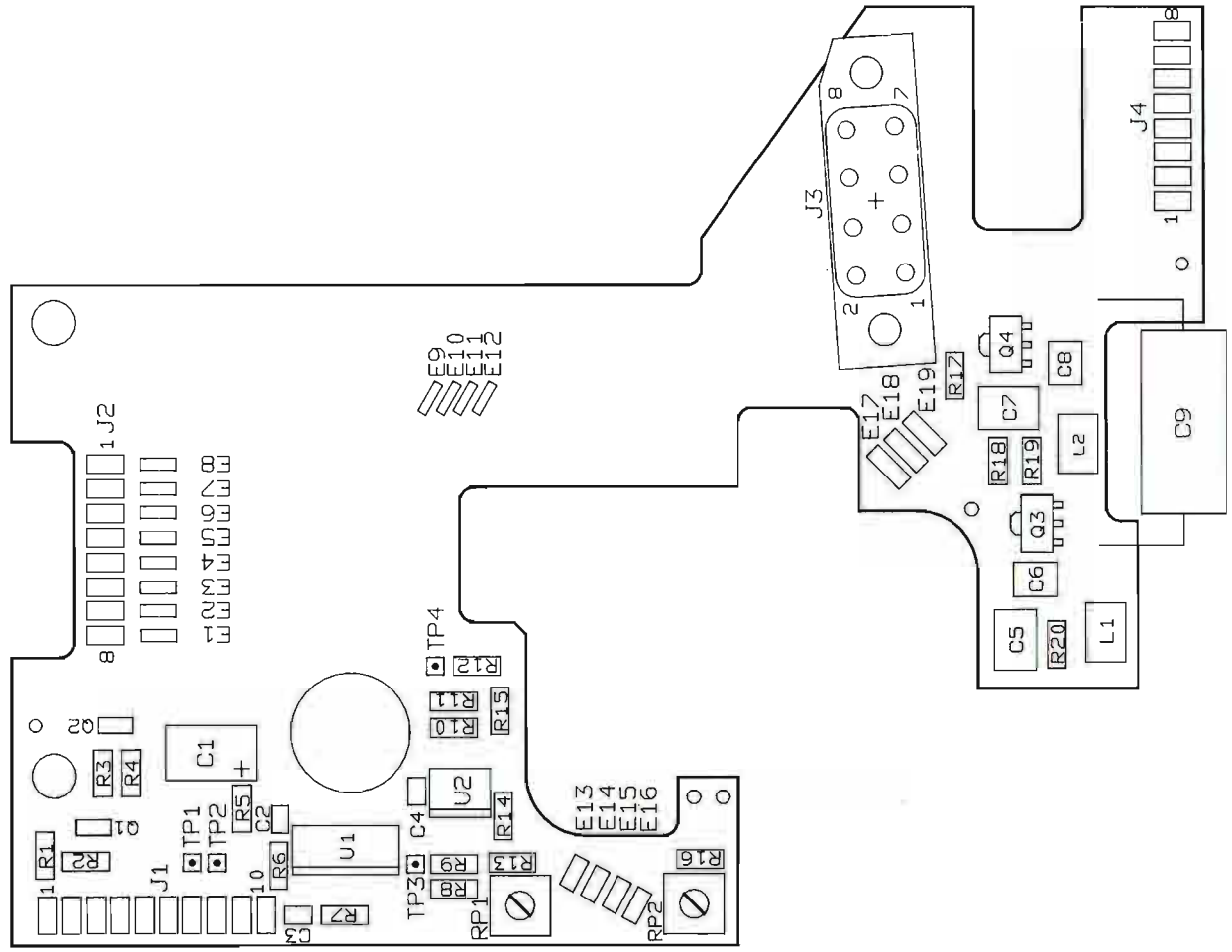

WARNING: HANDLE ONLY AT STATIC SAFE WORK STATION
ATTENTION: MANIPULATION UNIQUEMENT AUTORISEE SUR POSTE DE TRAVAIL PROTEGE
ACHTUNG: HANDHABUNG DAHER NUR AN GESCHÜTZTEN ARBEITSPLÄTZEN ERLAUBT

NAGRA

NAGRA	AUDIO DIVISION	KUDELSKI SA CH-1033 CHESEAUX SWITZERLAND
DRAW BY: GA DATE: 04-04-93	DIGITAL TAPE RECORDER NAGRA D	
CHECK BY: DATE:	TAPE ROLLER & ERASE	
	PRINTED-WIRING ASSEMBLY	
	A1 9110290000 REV B	
	RELEASE: 04-04-93 SCALE: ~	SHEET: 1 / 1

This drawing is confidential and may not be divulged in whole or in part to a third party

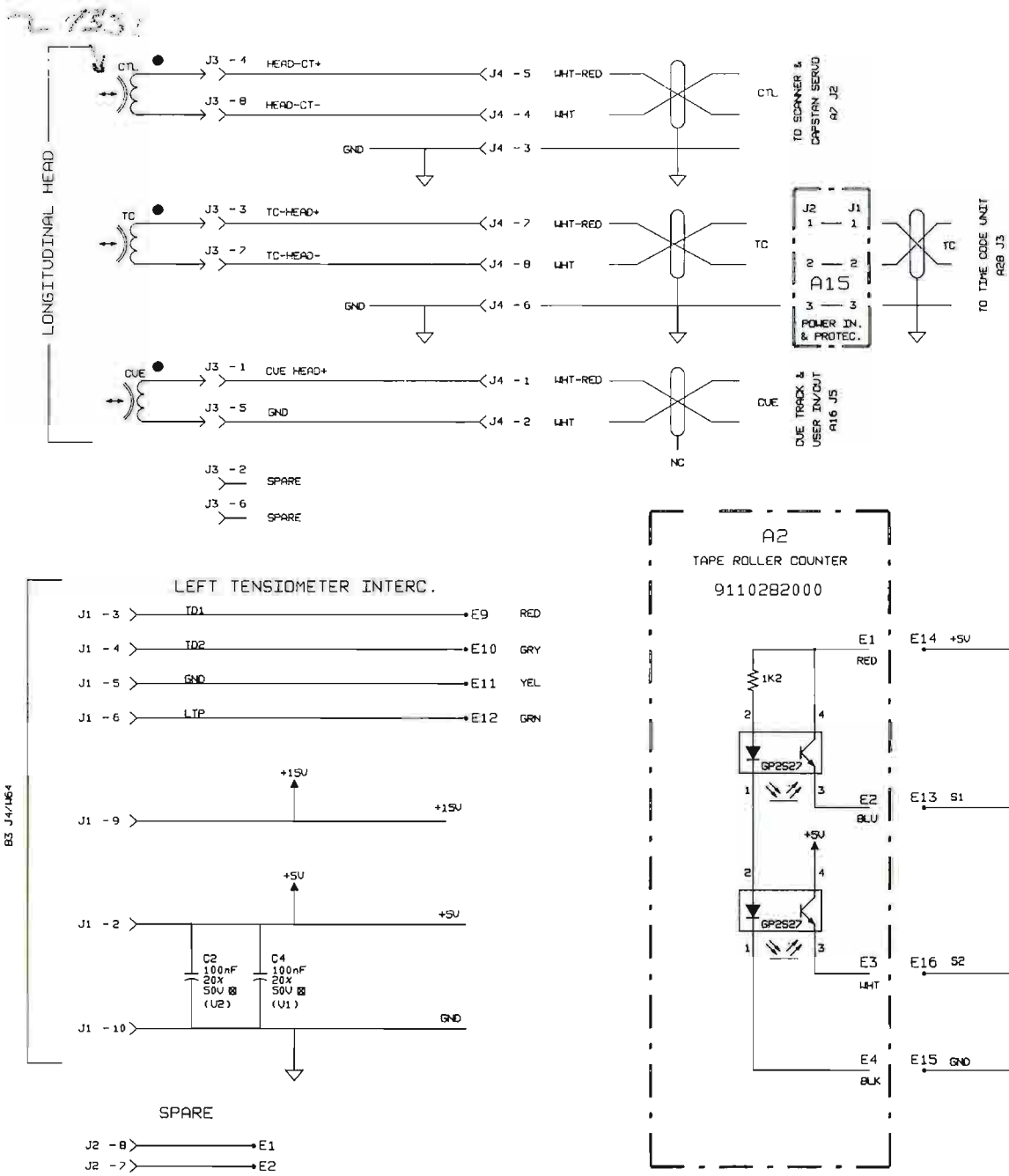

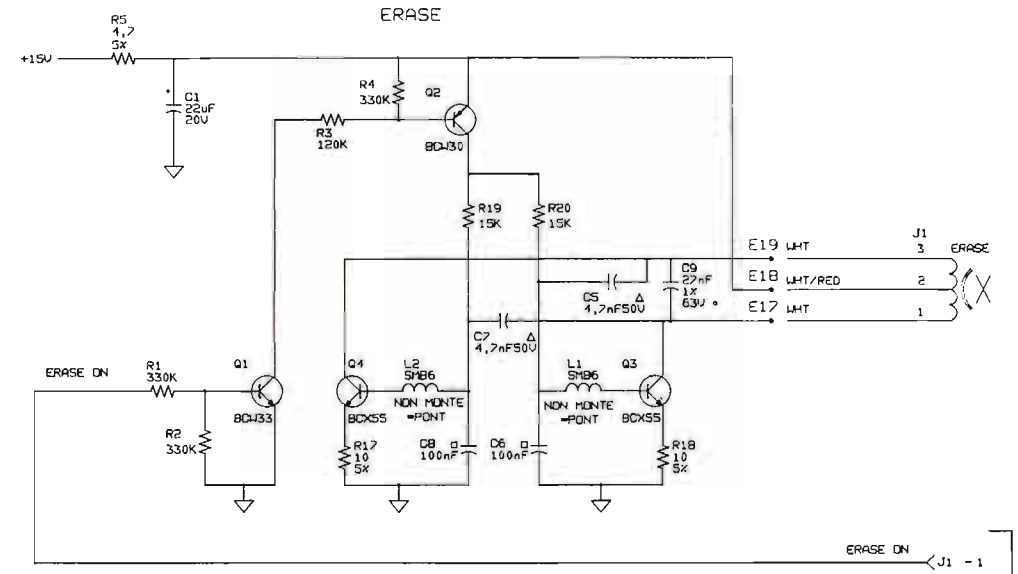

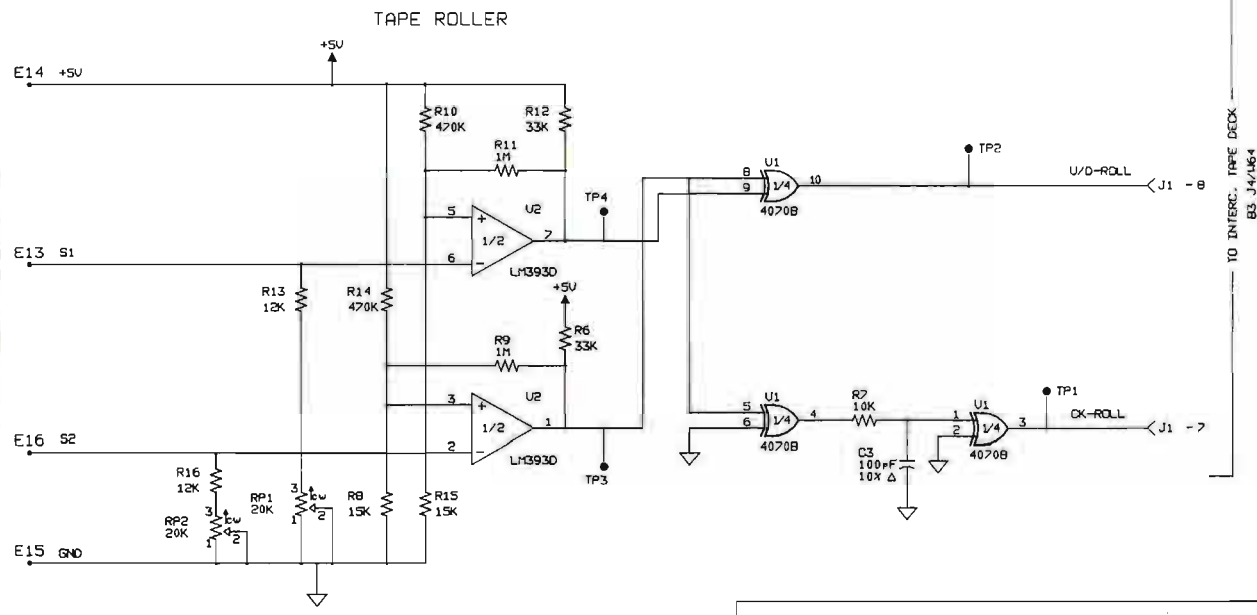

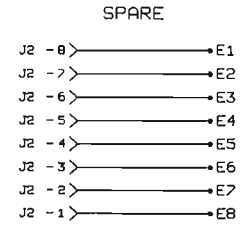

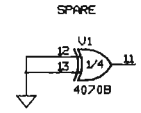

NAGRA	AUDIO DIVISION	KUDELSKI SA CH-1033 CHESEAUX SWITZERLAND
DRAW BY: GA DATE: 04-04-93	DIGITAL TAPE RECORDER NAGRA D	
CHECK BY: DATE:	TAPE ROLLER & ERASE SCHEMATIC	
	A1 0910290000	REV B
	RELEASE: 04-04-93 SCALE: ~	SHEET: 1/1

This drawing is confidential and may not be divulged in whole or in part to a third party

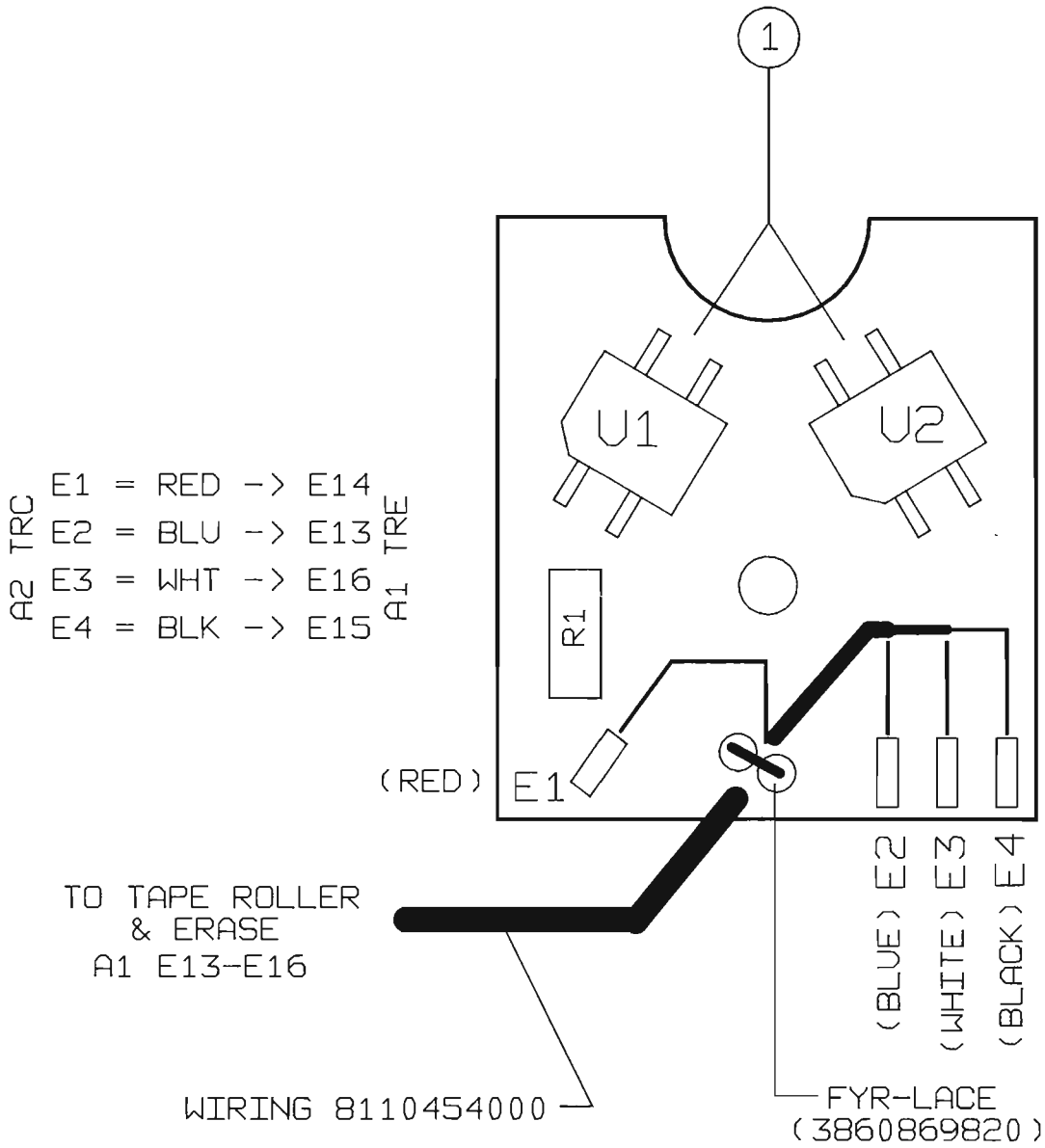

NOTE:

(1) SOUDER U1,U2 AU GABARIT

NAGRA	AUDIO DIVISION	KUDELSKI SA CH-1033 CHESEAUX SWITZERLAND
DRAW BY: GA DATE: 04-04-93	DIGITAL TAPE RECORDER NAGRA D TAPE ROLLER COUNTER PRINTED-WIRING ASSEMBLY	
CHECK BY: DATE:	A2 9110282000 REV A	
	RELEASE: 04-04-93 SCALE: ~	SHEET: 1 / 1

This drawing is confidential and may not be divulged in whole or in part to a third party

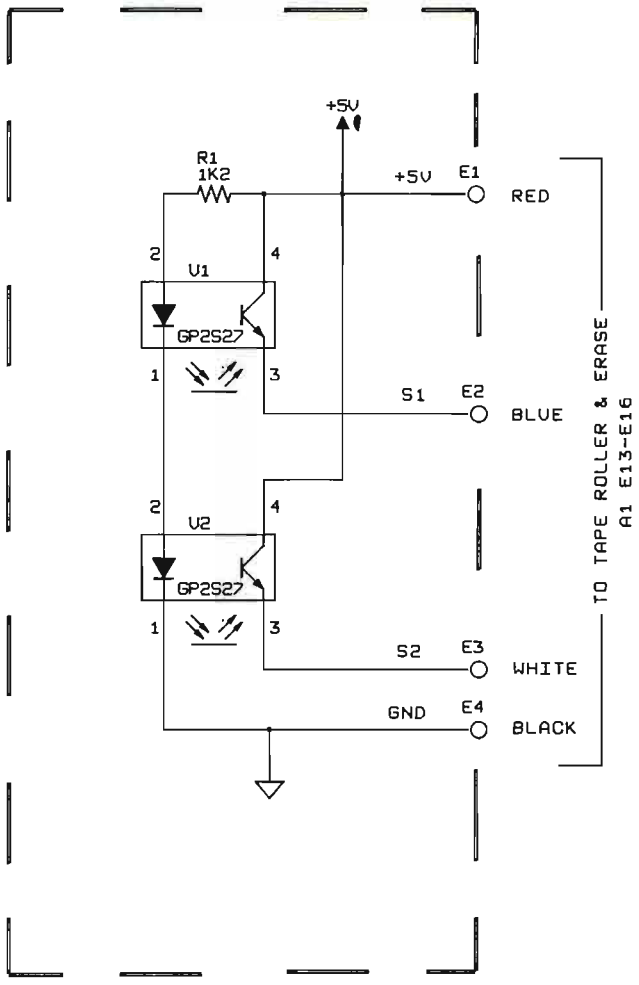

NAGRA	AUDIO DIVISION	KUDELSKI SA CH-1033 CHESEAUX SWITZERLAND
DRAW BY: GA DATE: 04-04-93	DIGITAL TAPE RECORDER NAGRA D TAPE ROLLER COUNTER SCHEMATIC	
CHECK BY: DATE:	A2 / 0910282000	REV A
	RELEASE: 04-04-93 / SCALE: ~	SHEET: 1/1

This drawing is confidential and may not be divulged in whole or in part to a third party

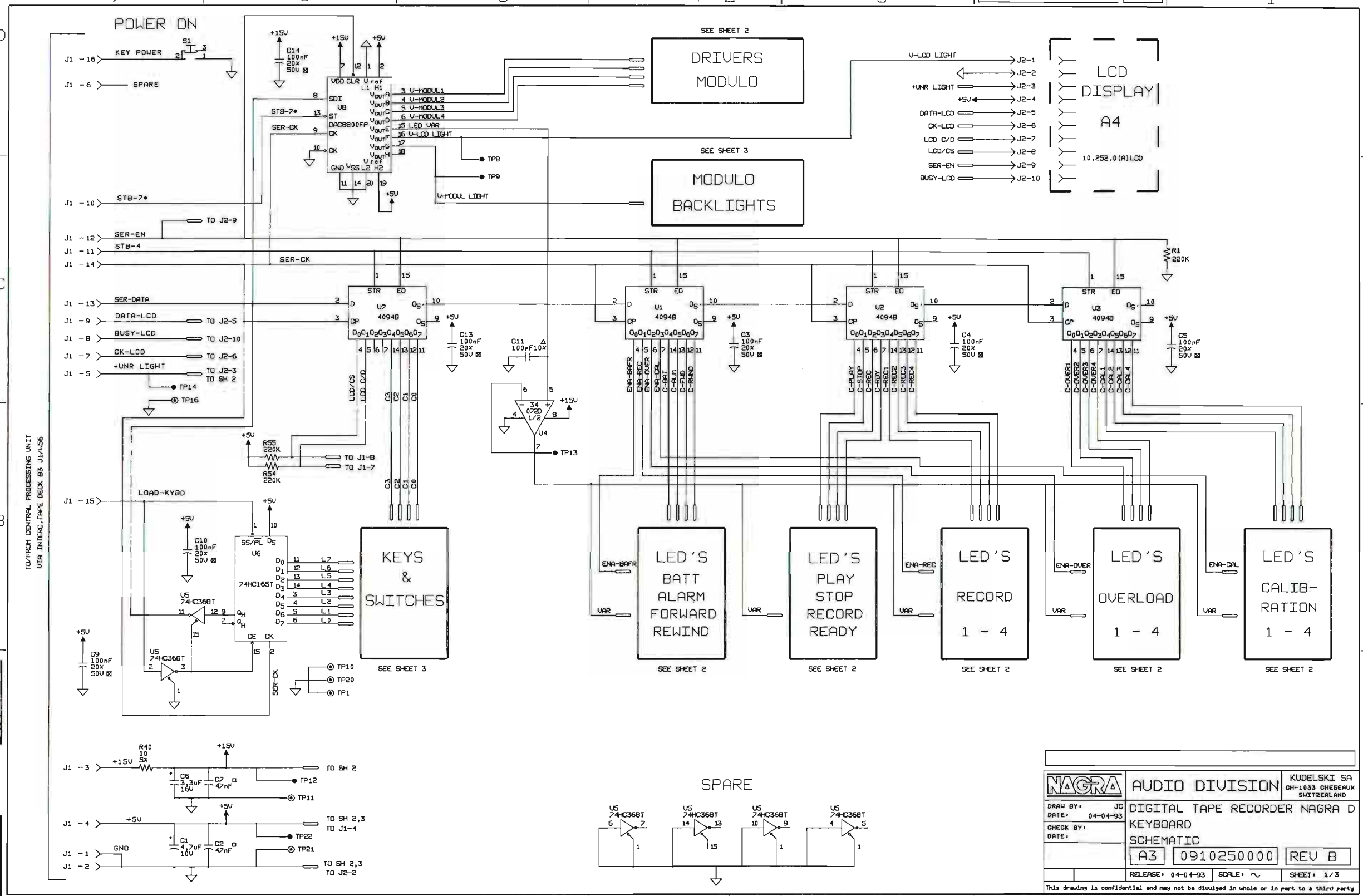
POWER ON
KEY POWER
SPARE
DRIVERS MODULO
SEE SHEET 2
MODULO BACKLIGHTS
SEE SHEET 3
LCD DISPLAY A4
10.252.0(A)LCD
KEYS & SWITCHES
LED'S BATT ALARM FORWARD REWIND
LED'S PLAY STOP RECORD READY
LED'S RECORD 1 - 4
LED'S OVERLOAD 1 - 4
LED'S CALIB-RATION 1 - 4
TO/FROM CENTRAL PROCESSING UNIT VIA INTERC.TAPE DECK B3 J1/H56
SPARE
AUDIO DIVISION
KUDELSKI SA
CH-1033 CHESEAUX SWITZERLAND
DRAW BY: JC
DATE: 04-04-93
CHECK BY:
DATE:
DIGITAL TAPE RECORDER NAGRA D
KEYBOARD
SCHEMATIC
A3
0910250000
REV B
RELEASE: 04-04-93
SCALE: ~
SHEET: 1/3
This drawing is confidential and may not be divulged in whole or in part to a third party

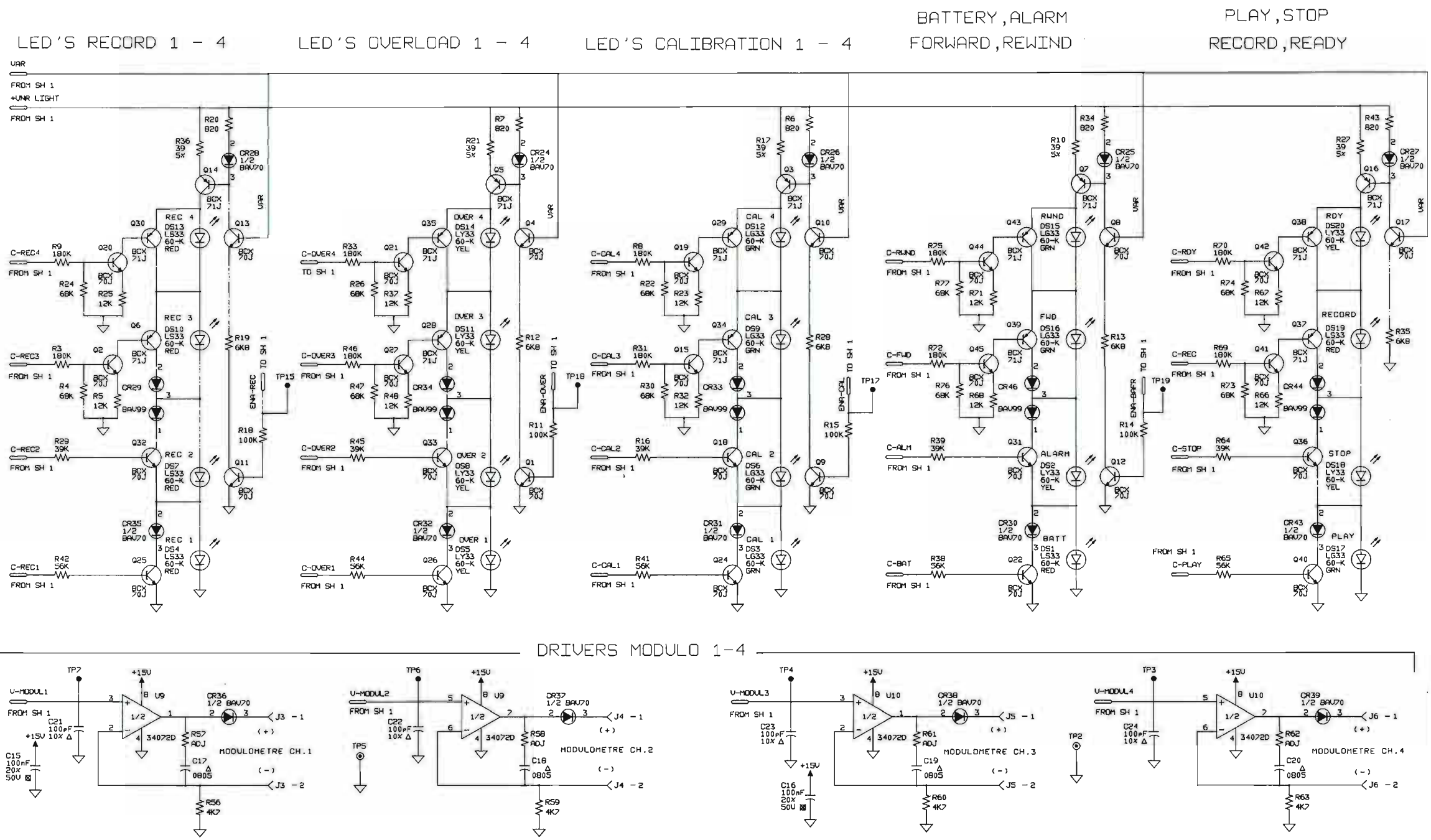

NAGRA

DIGITAL TAPE RECORDER NAGRA D
KEYBOARD
SCHEMATIC

A3	0910250000	REV B
RELEASE: 04-04-93	SCALE: ~	SHEET: 2/3

This drawing is confidential and may not be divulged in whole or in part to a third party

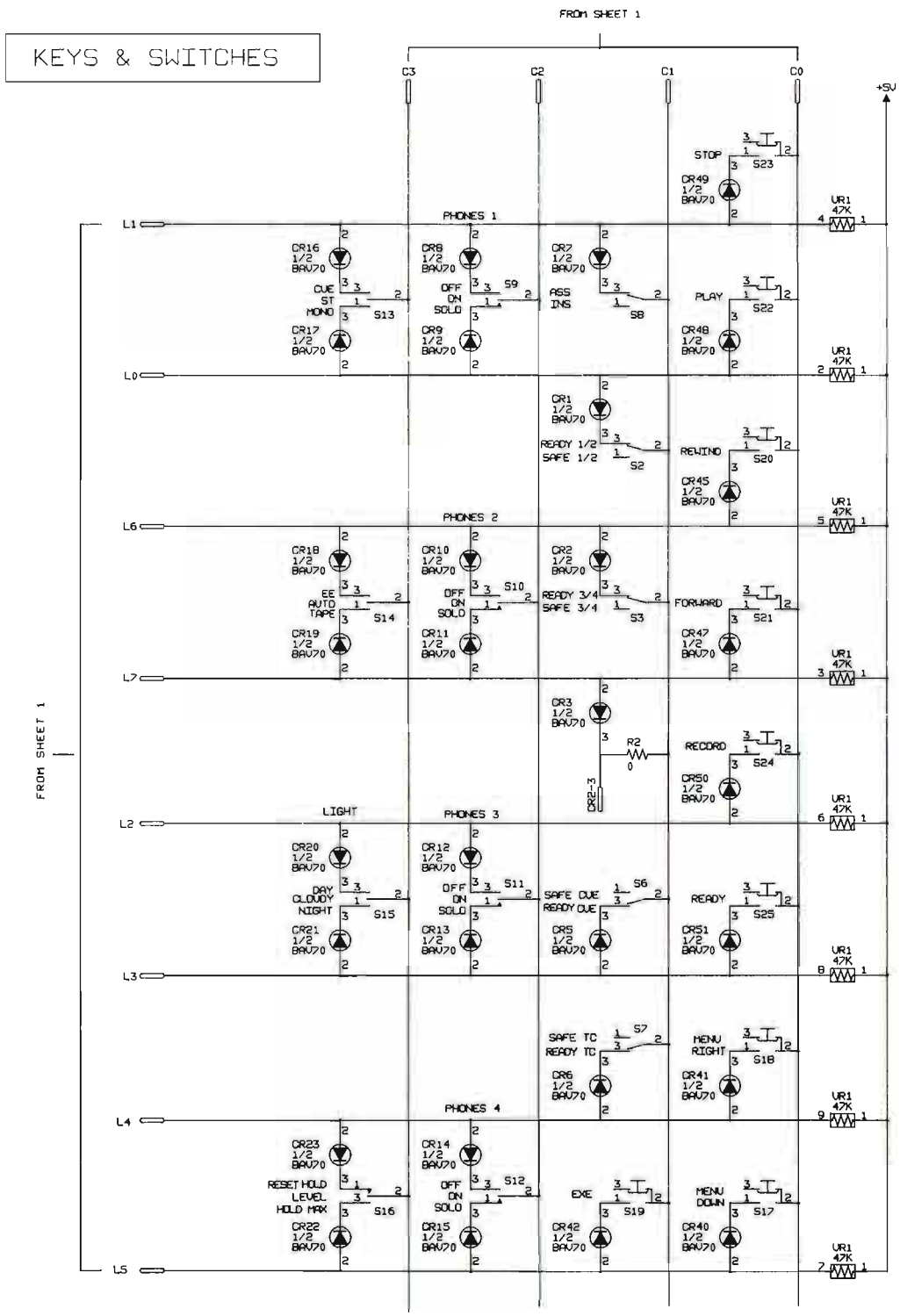

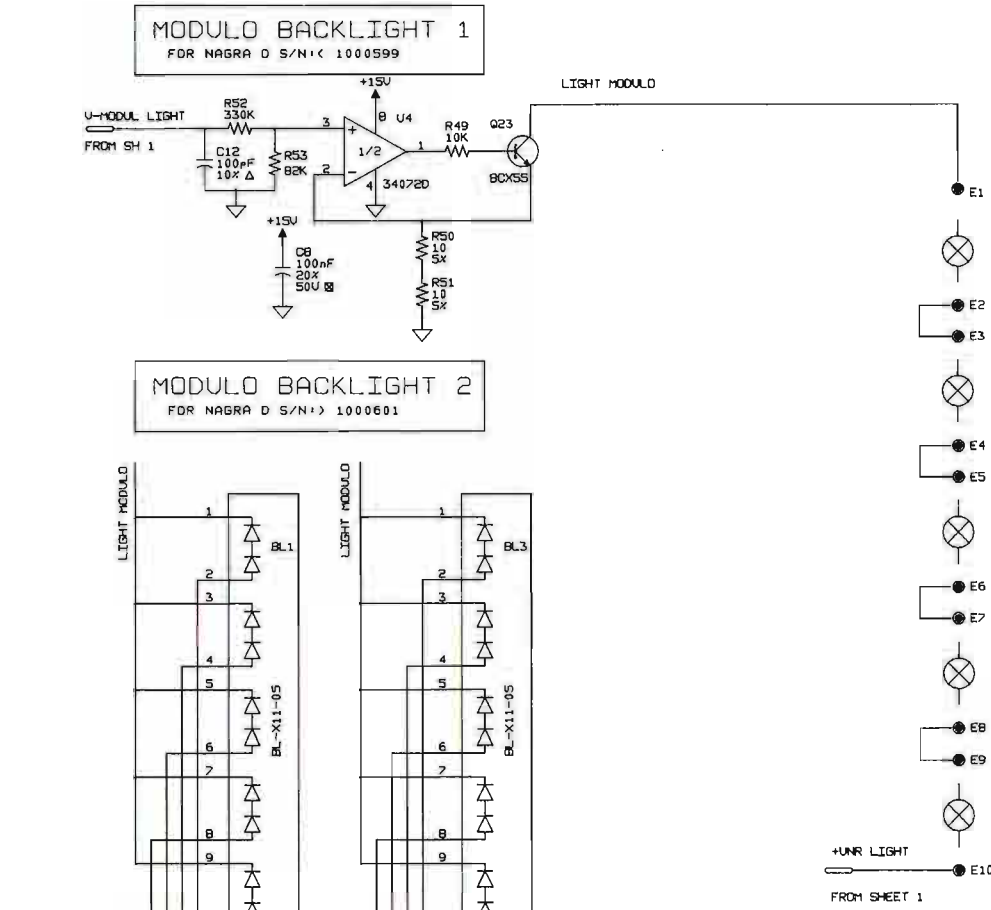

NAGRA

DIGITAL TAPE RECORDER NAGRA D
KEYBOARD
SCHEMATIC

A3	0910250000	REV B
RELEASE: 04-04-93	SCALE: ~	SHEET: 3/3

This drawing is confidential and may not be divulged in whole or in part to a third party

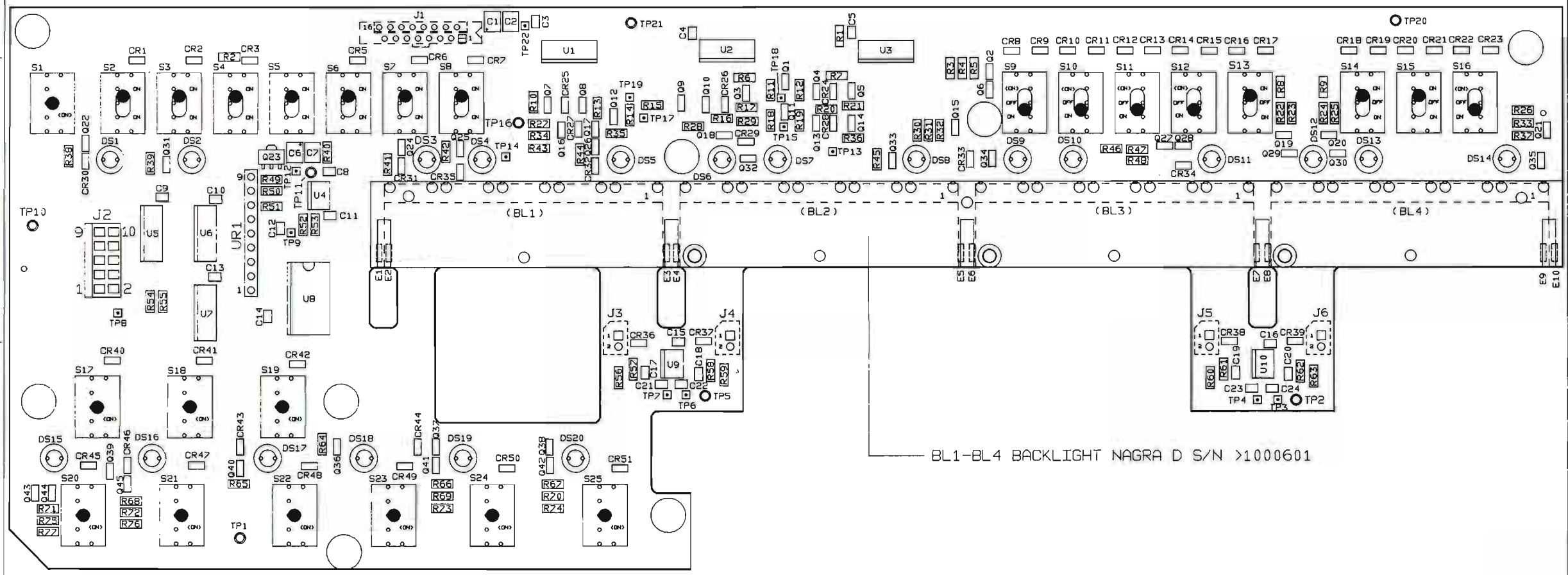

WARNING: HANDLE ONLY AT STATIC SAFE WORK STATION
ATTENTION: MANIPULATION UNIQUEMENT AUTORISEE SUR POSTE DE TRAVAIL PROTEGE
ACHTUNG: HANDHABUNG DAHER NUR AN GESCHÜTZTEN ARBEITSPLÄTZEN ERLAUBT

NAGRA	AUDIO DIVISION	KUDELSKI SA CH-1033 CHESEAUX SWITZERLAND
DRAW BY: JC DATE: 04-04-93	DIGITAL TAPE RECORDER NAGRA D KEYBOARD	
CHECK BY: DATE:	PRINTED-WIRING ASSEMBLY	
	A3 9110250000	REV B
	RELEASE: 04-04-93 SCALE: ~	SHEET: 1/1

This drawing is confidential and may not be divulged in whole or in part to a third party

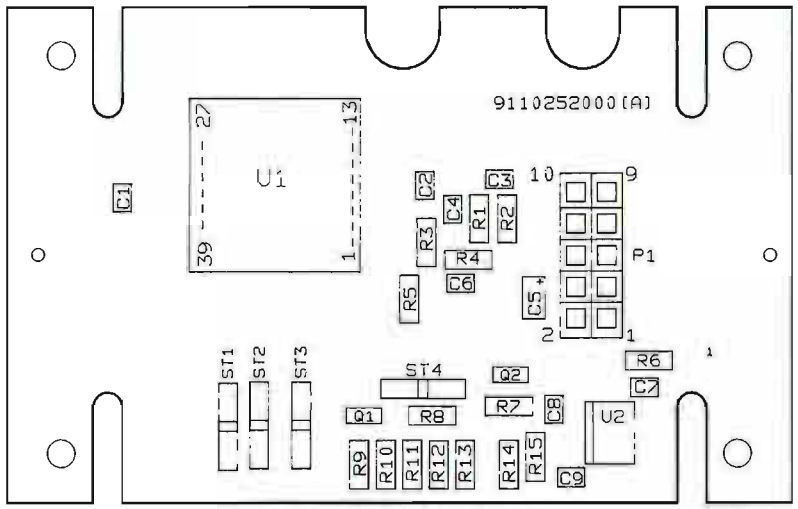

COMPONENTS TOP SIDE

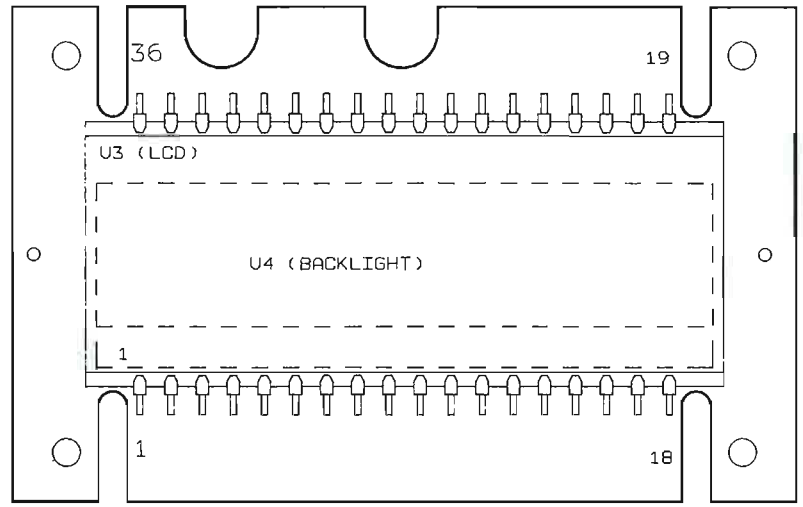

COMPONENTS BOT SIDE

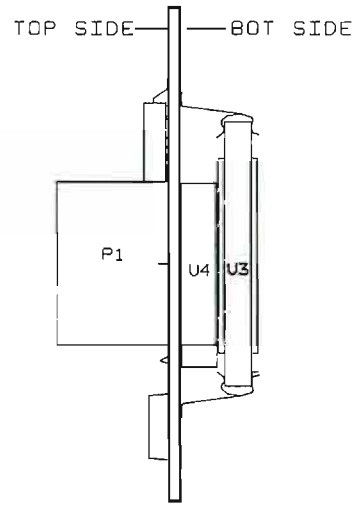

WARNING: HANDLE ONLY AT STATIC SAFE WORK STATION
ATTENTION: MANIPULATION UNIQUEMENT AUTORISEE SUR POSTE DE TRAVAIL PROTEGE
ACHTUNG: HANDHABUNG DAHER NUR AN GESCHÜTZTEN ARBEITSPLÄTZEN ERLAUBT

NAGRA	AUDIO DIVISION	KUDELSKI SA CH-1033 CHESEAUX SWITZERLAND
DRAW BY: JC DATE: 04-04-93	DIGITAL TAPE RECORDER NAGRA D DISPLAY	
CHECK BY: DATE:	PRINTED-WIRING ASSEMBLY	
	A4 9110252000 REV A	
	RELEASE: 04-04-93 SCALE: ~	SHEET: 1/1

This drawing is confidential and may not be divulged in whole or in part to a third party

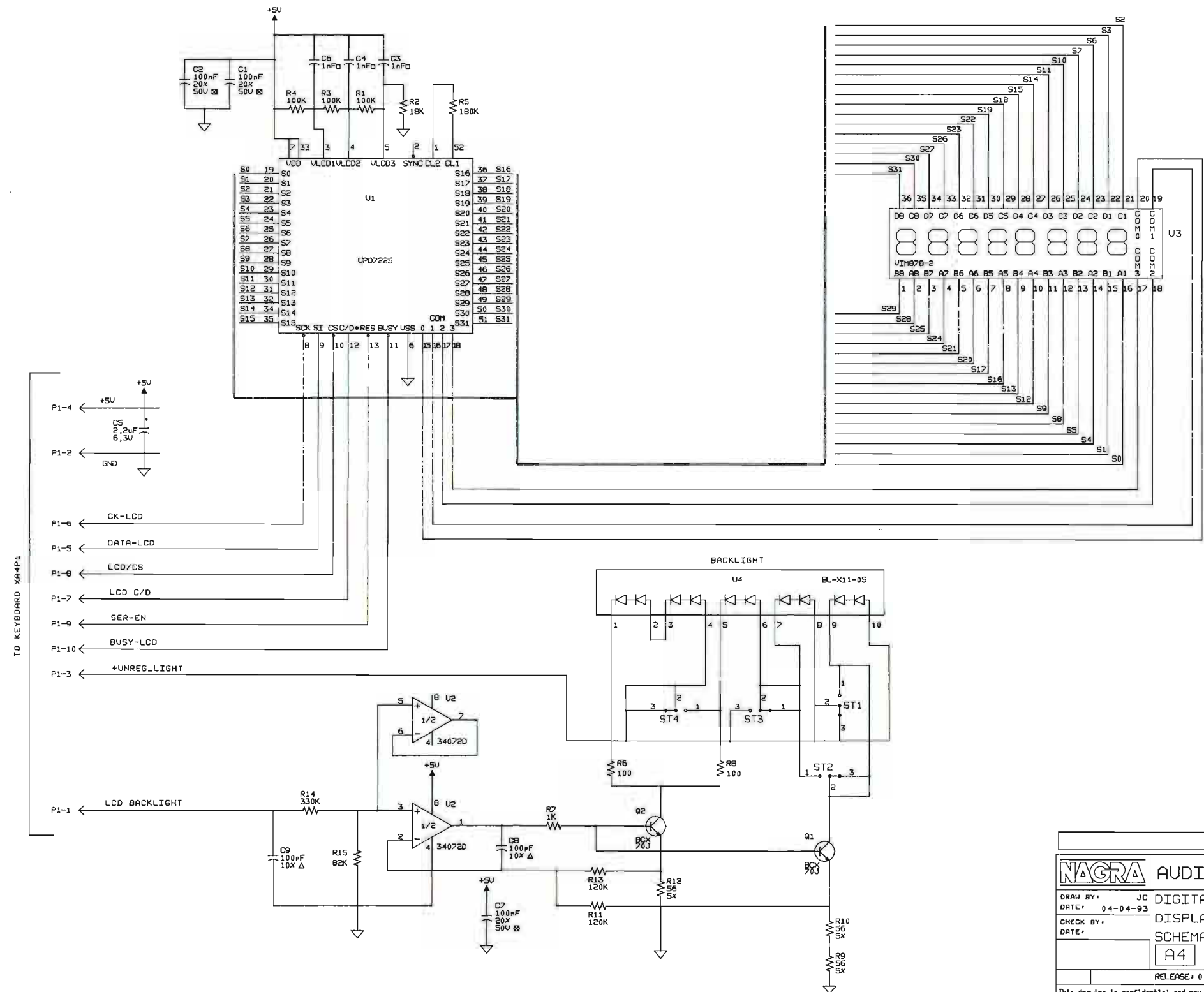

NAGRA	AUDIO DIVISION	KUDELSKI SA CH-1033 CHESEAUX SWITZERLAND
DRAW BY: JC DATE: 04-04-93	DIGITAL TAPE RECORDER NAGRA D DISPLAY SCHEMATIC	
CHECK BY: DATE:	A4 0910252000	REV A
	RELEASE: 04-04-93 SCALE: ~	SHEET: 1/1

This drawing is confidential and may not be divulged in whole or in part to a third party

3

June 1994

COMPOSANTS MONTES SUR FACE 2

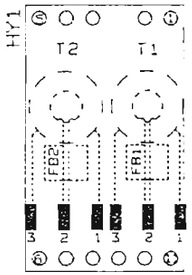

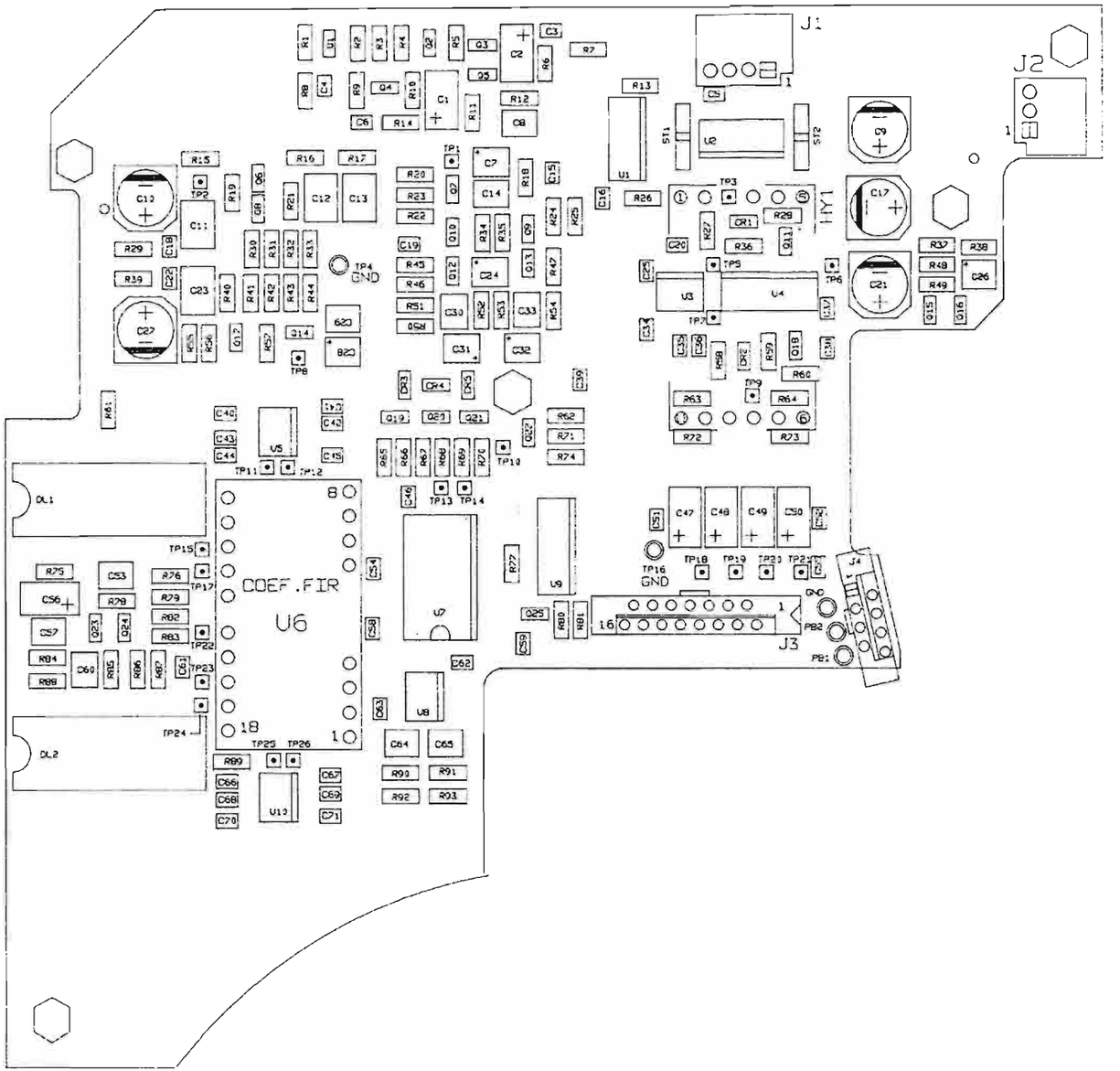

NOTA: LES COMPOSANTS HY1,T1,T2,FB1,FB2,SONT MONTES SUR LA FACE 2

NAGRA	OBSERVATIONS				
	PLAN D'IMPLANTATION		ECHELLE	DESSINE:	JC	13-05-9
	C.I. RECORD AMPLIFIER & EQUALIZER		~	VISA:		
	APPAREIL: NAGRA D	A5	9110277000			

CE DOCUMENT EST LA PROPRIETE DE LA SOCIETE KUDELSKI SA

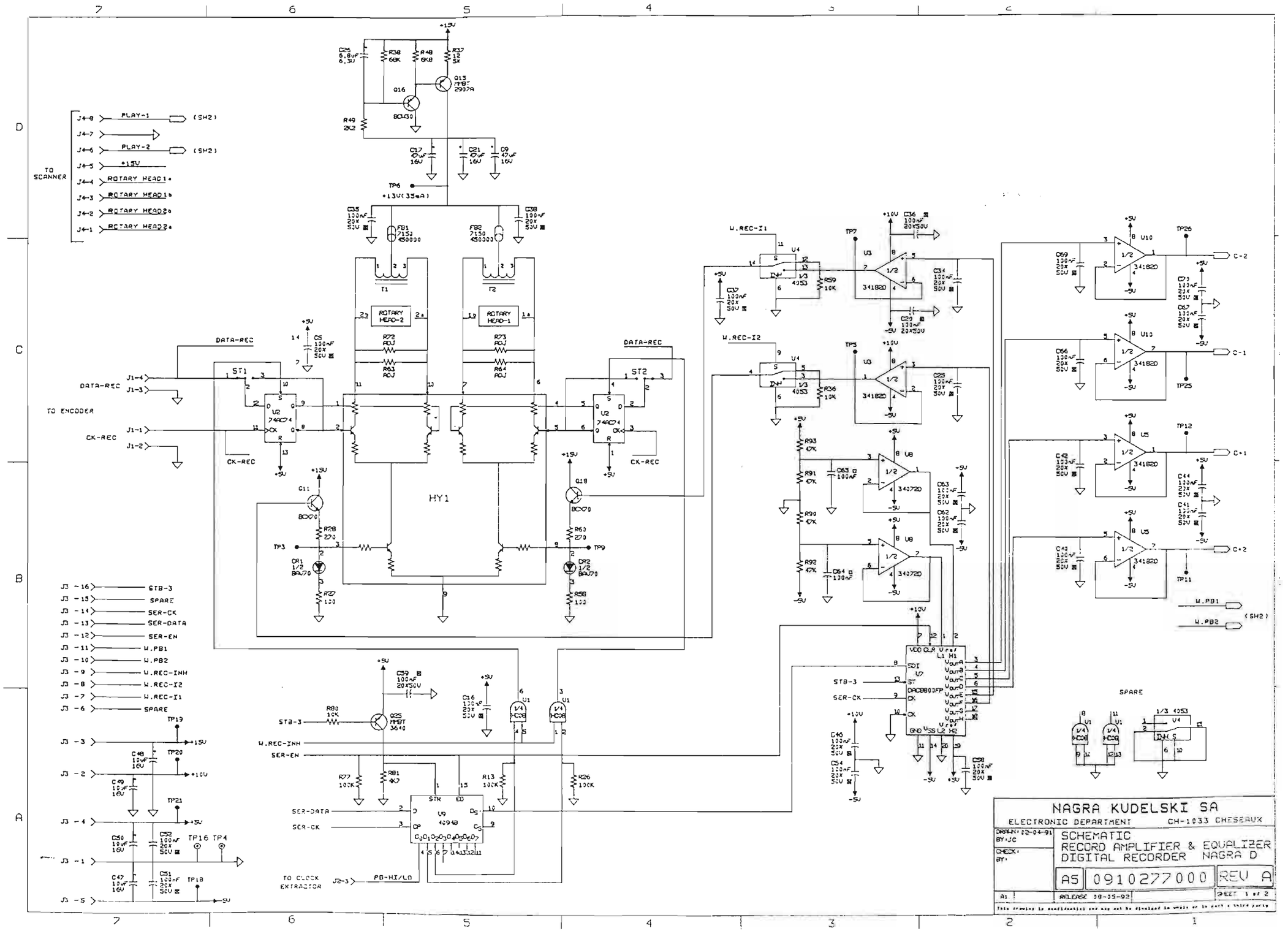

TO SCANNER
J4-8 PLAY-1 (SH2)
J4-7
J4-6 PLAY-2 (SH2)
J4-5 +15V
J4-4 ROTARY HEAD1a
J4-3 ROTARY HEAD1b
J4-2 ROTARY HEAD2b
J4-1 ROTARY HEAD2a
TO ENCODER
DATA-REC
CK-REC
J1-4
J1-3
J1-1
J1-2
ST1
ST2
U2 74AC74
HY1
ROTARY HEAD-2
ROTARY HEAD-1
T1
T2
FB1 7150 450000
FB2 7150 450000
+13V(35mA)
TP6
Q16 BCW30
Q13 MMBT 2907A
W.REC-I1
W.REC-I2
U4 4053
U3 34182D
U8 34072D
U7 DAC8800FP
U9 4094B
U1 1/4 HC08
U10 34182D
U5 34182D
U4 1/3 4053
STB-3
SPARE
SER-CK
SER-DATA
SER-EN
W.PB1
W.PB2
W.REC-INH
W.REC-I2
W.REC-I1
SPARE
J3-16 STB-3
J3-15 SPARE
J3-14 SER-CK
J3-13 SER-DATA
J3-12 SER-EN
J3-11 W.PB1
J3-10 W.PB2
J3-9 W.REC-INH
J3-8 W.REC-I2
J3-7 W.REC-I1
J3-6 SPARE
J3-3
J3-2
J3-4
J3-1
J3-5
TP19
TP20
TP21
TP16 TP4
TP18
STB-3
W.REC-INH
SER-EN
SER-DATA
SER-CK
TO CLOCK EXTRACTOR
J2-3 PB-HI/LO
C-2
C-1
C+1
C+2
W.PB1
W.PB2
(SH2)
NAGRA KUDELSKI SA
ELECTRONIC DEPARTMENT
CH-1033 CHESEAUX
DRAWN: 02-04-91
BY: JC
CHECK:
BY:
SCHEMATIC
RECORD AMPLIFIER & EQUALIZER
DIGITAL RECORDER NAGRA D
A5 0910277000 REV A
A1
RELEASE 08-05-92
SHEET 1 of 2

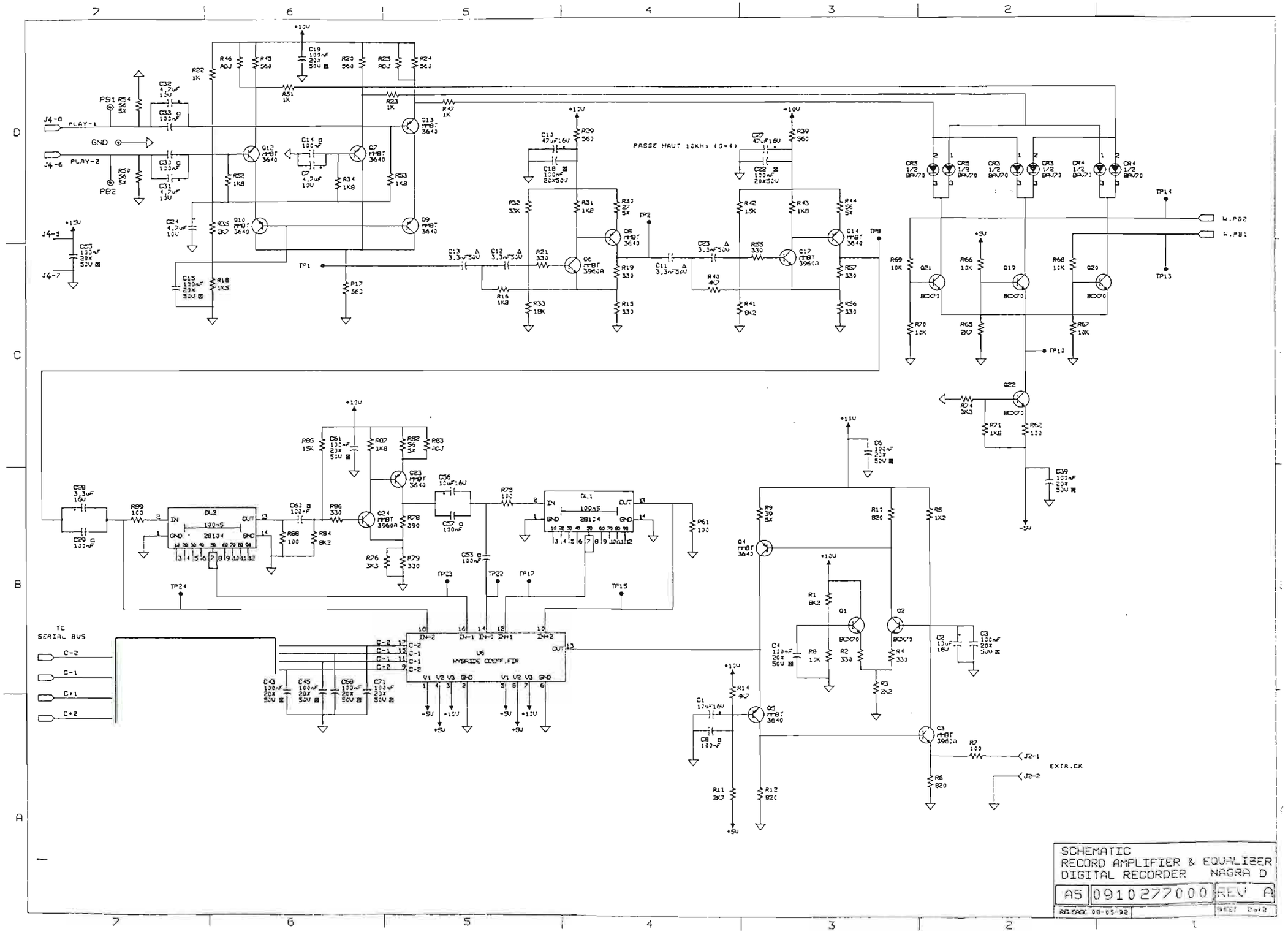

SCHEMATIC
RECORD AMPLIFIER & EQUALIZER
DIGITAL RECORDER NAGRA D

A5	0910277000	REV A
RELEASE 08-05-92		SHEET 2 of 2

9110277100[A] 1/1

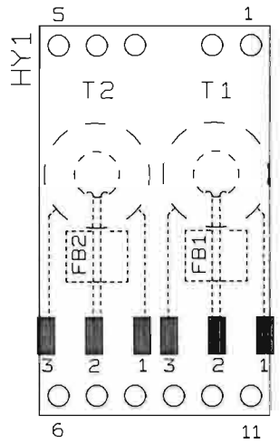

BOT ASSY

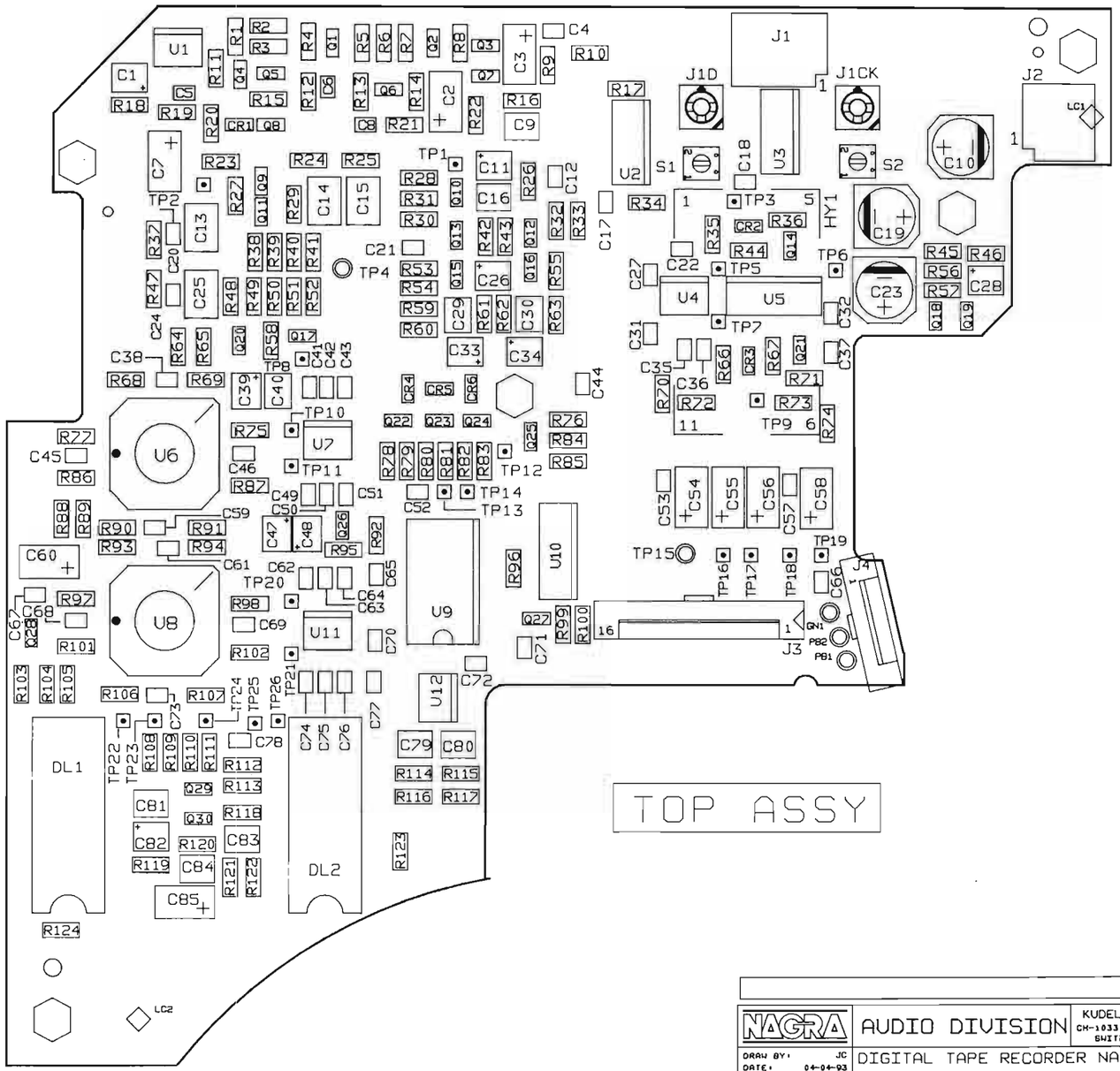

TOP ASSY

WARNING: HANDLE ONLY AT STATIC SAFE WORK STATION
ATTENTION: MANIPULAITION UNIQUEMENT AUTORISEE SUR POSTE DE TRAVAIL PROTEGE
ACHTUNG: HANDHABUNG DAHER NUR AN GESCHÜTZTEN ARBEITSPLÄTZEN ERLAUBT

NAGRA	AUDIO DIVISION	KUDELSKI SA CH-1033 CHESEAUX SWITZERLAND
DRAW BY: JC DATE: 04-04-93	DIGITAL TAPE RECORDER NAGRA D	
CHECK BY: DATE:	RECORD AMPLIFIER & EQUALIZER	
	PRINTED-WIRING ASSEMBLY	
	A5 9110277100 REV A	
	RELEASE: 04-04-93 SCALE: ~ SHEET: 1/1	

This drawing is confidential and may not be divulged in whole or in part to a third party

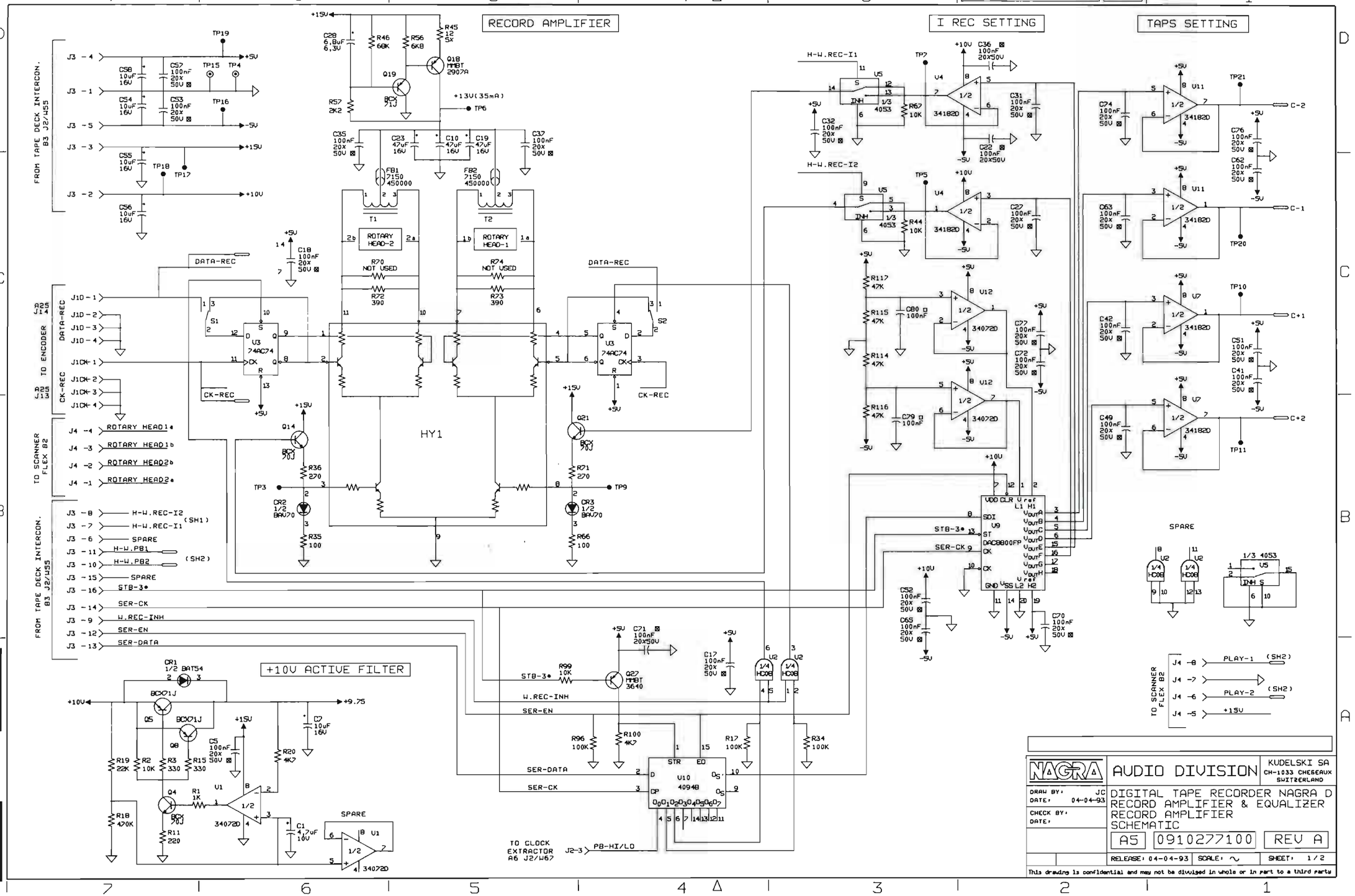

NAGRA

NAGRA	AUDIO DIVISION	KUDELSKI SA CH-1033 CHESEAUX SWITZERLAND
DRAW BY: JC DATE: 04-04-93	DIGITAL TAPE RECORDER NAGRA D RECORD AMPLIFIER & EQUALIZER RECORD AMPLIFIER SCHEMATIC	
CHECK BY: DATE:	A5	0910277100 REV A
	RELEASE: 04-04-93 SCALE: ~	SHEET: 1/2

This drawing is confidential and may not be divulged in whole or in part to a third party

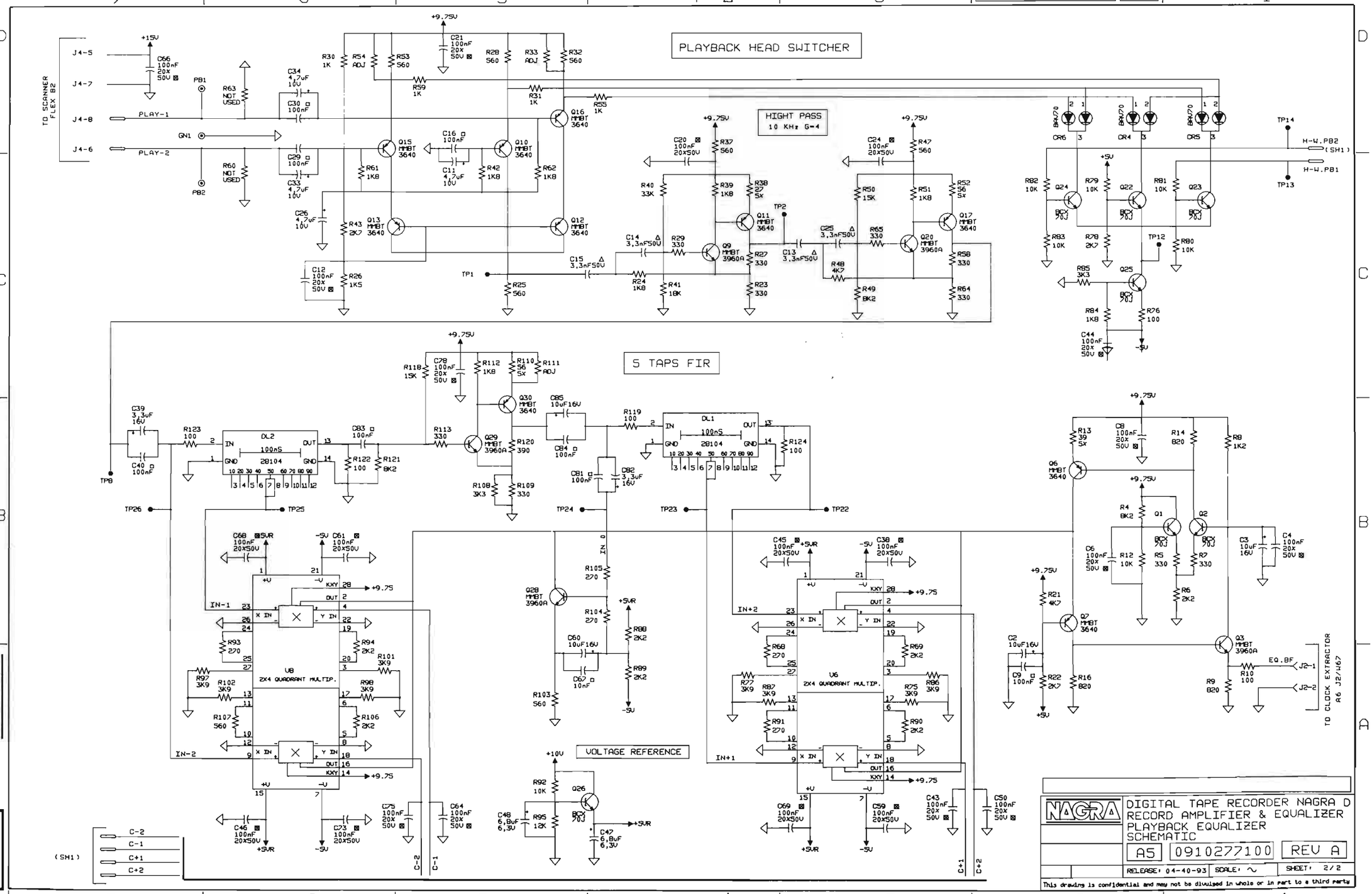

NAGRA

DIGITAL TAPE RECORDER NAGRA D
RECORD AMPLIFIER & EQUALIZER
PLAYBACK EQUALIZER
SCHEMATIC

A5 | 0910277100 | REV A

RELEASE: 04-40-93 | SCALE: ~ | SHEET: 2/2

This drawing is confidential and may not be divulged in whole or in part to a third party

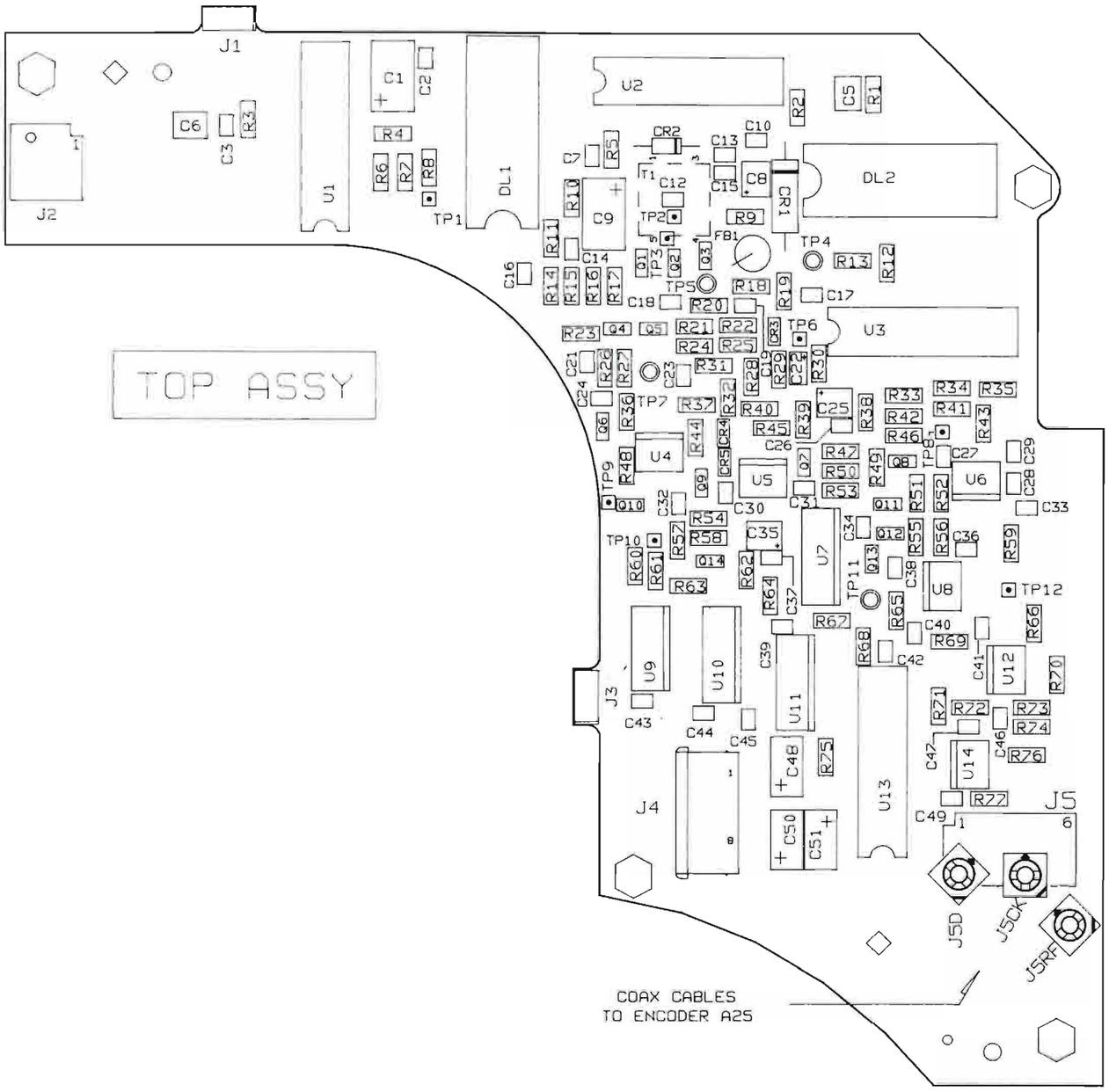

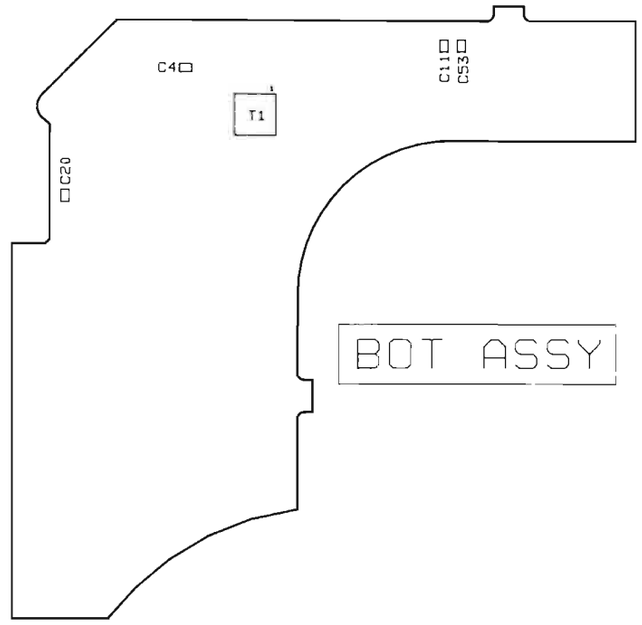

WARNING: HANDLE ONLY AT STATIC SAFE WORK STATION
ATTENTION: MANIPULATION UNIQUEMENT AUTORISEE SUR POSTE DE TRAVAIL PROTEGE
ACHTUNG: HANDHABUNG DAHER NUR AN GESCHÜTZTEN ARBEITSPLÄTZEN ERLAUBT

NAGRA	AUDIO DIVISION	KUDELSKI SA CH-1033 CHESEAUX SWITZERLAND
DRAW BY: JC DATE: 04-04-93	DIGITAL TAPE RECORDER NAGRA D	
CHECK BY: DATE:	CLOCK EXTRACTOR	
	PRINTED-WIRING ASSEMBLY	
	A6 9110284100	REV A
	RELEASE: XX-XX-XX SCALE: ~	SHEET: 1/1

This drawing is confidential and may not be divulged in whole or in part to a third party

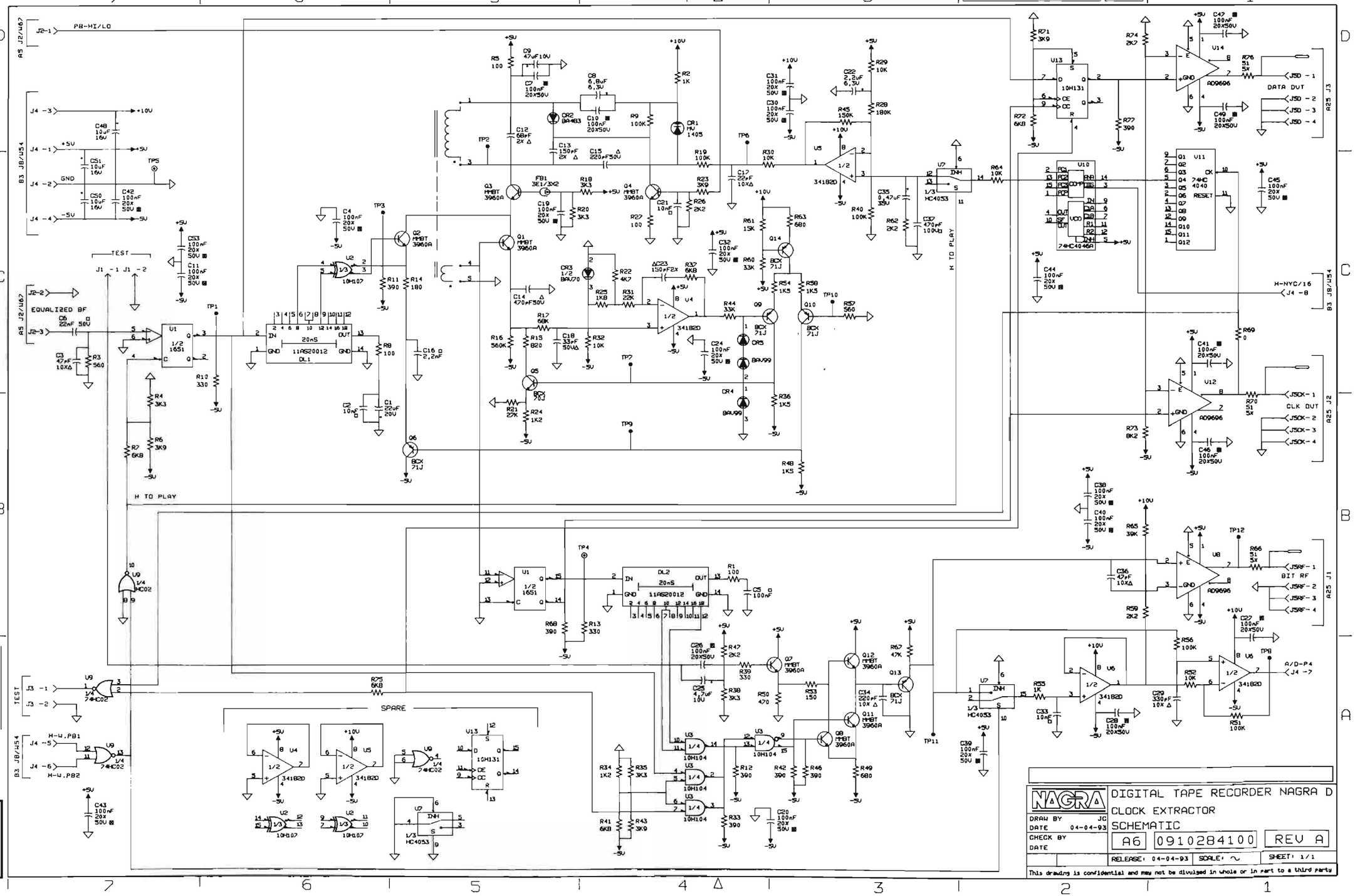
0910284100[A] 1/1
DIGITAL TAPE RECORDER NAGRA D
CLOCK EXTRACTOR
SCHEMATIC
DRAW BY JC
DATE 04-04-93
CHECK BY
DATE
A6 0910284100 REV A
RELEASE: 04-04-93 SCALE: ~ SHEET: 1/1
This drawing is confidential and may not be divulged in whole or in part to a third party
DATA OUT
CLK OUT
BIT RF
A/D-P4
H-NYC/16
H TO PLAY
EQUALIZED BF
P8-HI/LO
SPARE
TEST

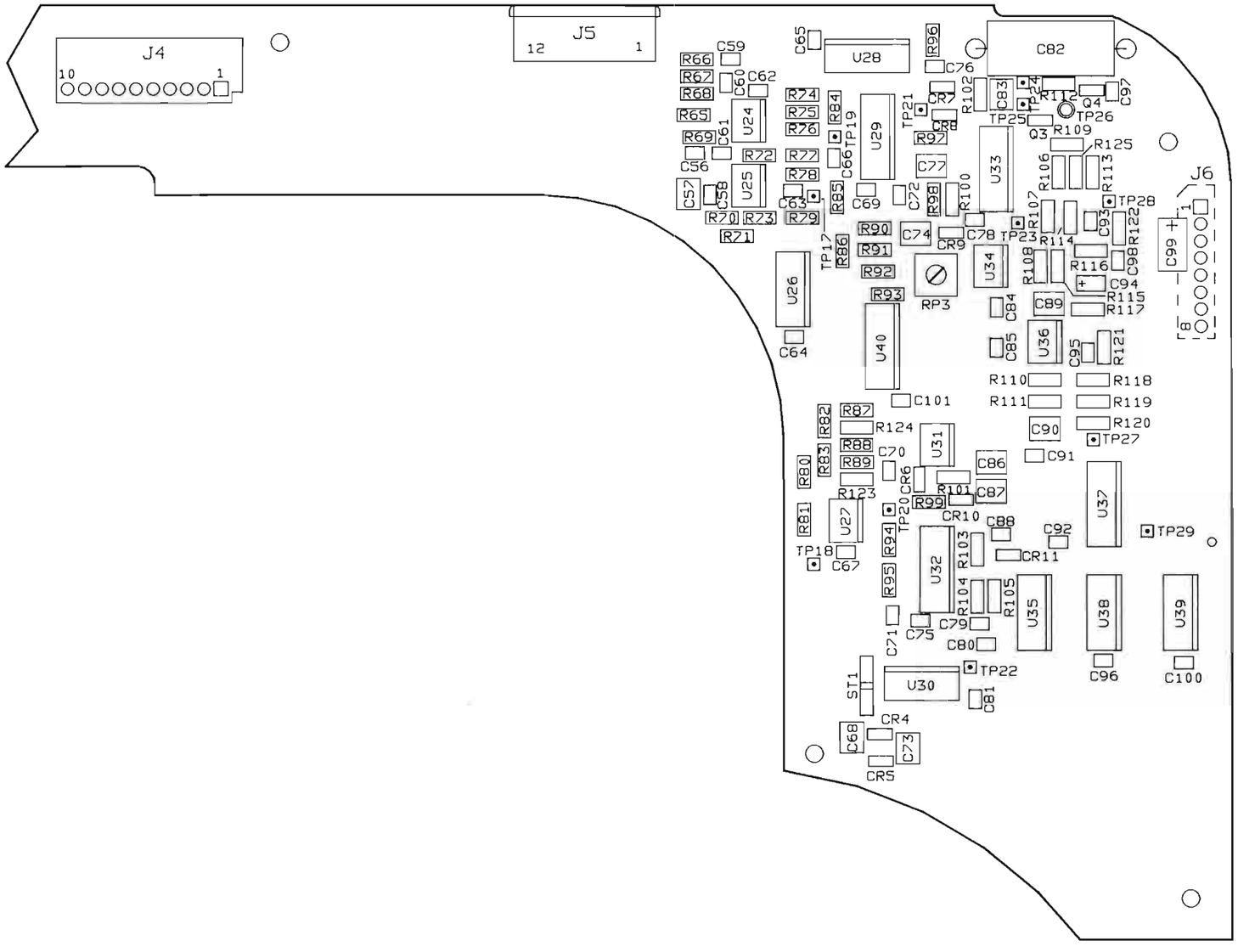

WARNING: HANDLE ONLY AT STATIC SAFE WORK STATION
ATTENTION: MANIPULATION UNIQUEMENT AUTORISEE SUR POSTE DE TRAVAIL PROTEGE
ACHTUNG: HANDHABUNG DAHER NUR AN GESCHÜTZTEN ARBEITSPLÄTZEN ERLAUBT

NAGRA	AUDIO DIVISION	KUDELSKI SA CH-1033 CHESEAUX SWITZERLAND
DRAW BY: GA DATE: 04-04-93	DIGITAL TAPE RECORDER NAGRA D SCANNER & CAPSTAN SERVO PRINTED-WIRING ASSEMBLY	
CHECK BY: DATE:	A7 9110254000 REV B	
	RELEASE: 04-04-93 SCALE: ~	SHEET: 3 / 3

This drawing is confidential and may not be divulged in whole or in part to a third party

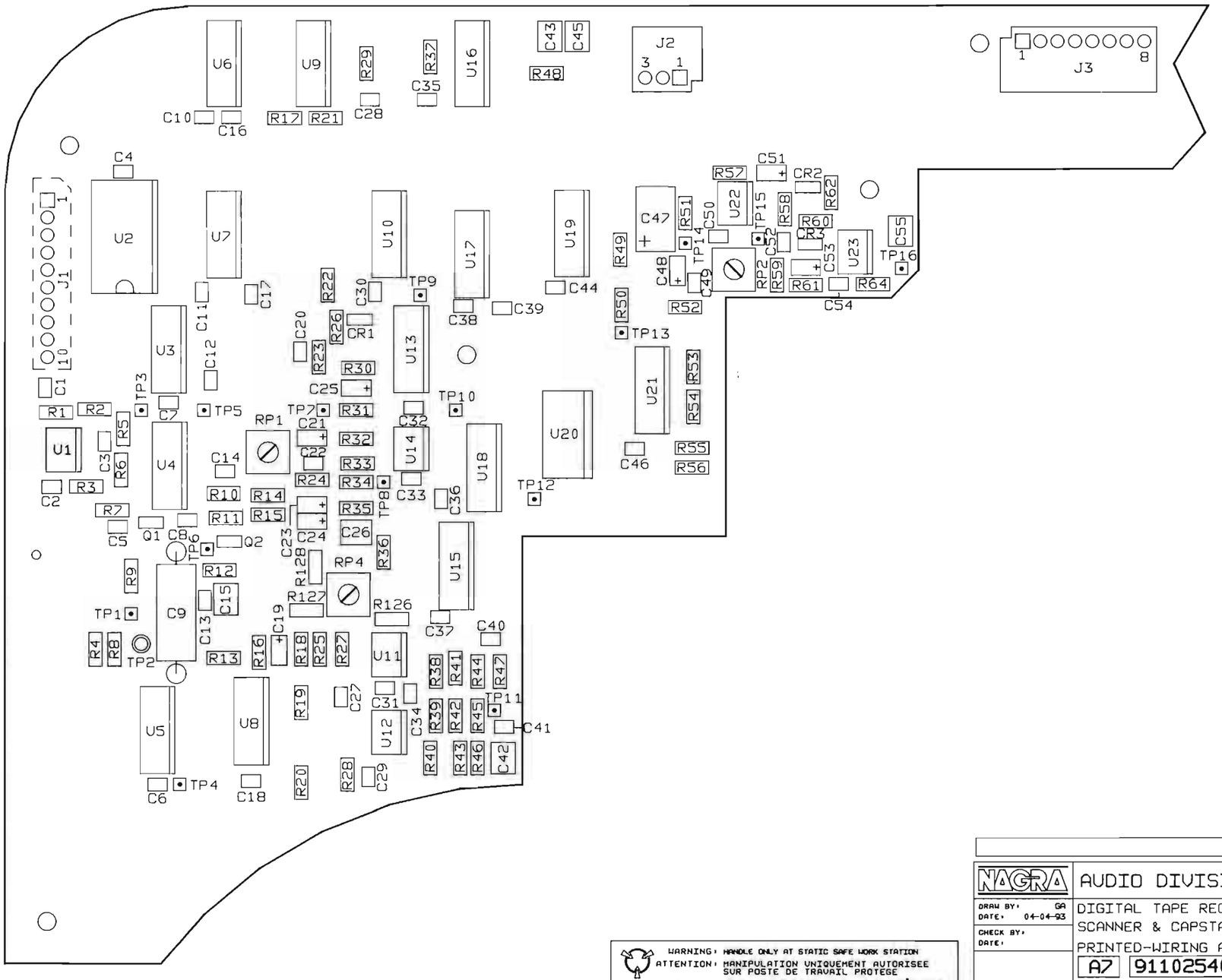

WARNING: HANDLE ONLY AT STATIC SAFE WORK STATION
ATTENTION: MANIPULATION UNIQUEMENT AUTORISEE SUR POSTE DE TRAVAIL PROTEGE
ACHTUNG: HANDHABUNG DAHER NUR AN GESCHÜTZTEN ARBEITSPLÄTZEN ERLAUBT

NAGRA

AUDIO DIVISION

KUDELSKI SA
CH-1033 CHESEAUX
SWITZERLAND

DRAW BY: GA
DATE: 04-04-93
CHECK BY:
DATE:

DIGITAL TAPE RECORDER NAGRA D
SCANNER & CAPSTAN SERVO
PRINTED-WIRING ASSEMBLY

A7 | 9110254000 | REV B

RELEASE: 04-04-93 | SCALE: ~ | SHEET: 2 / 3

This drawing is confidential and may not be divulged in whole or in part to a third party

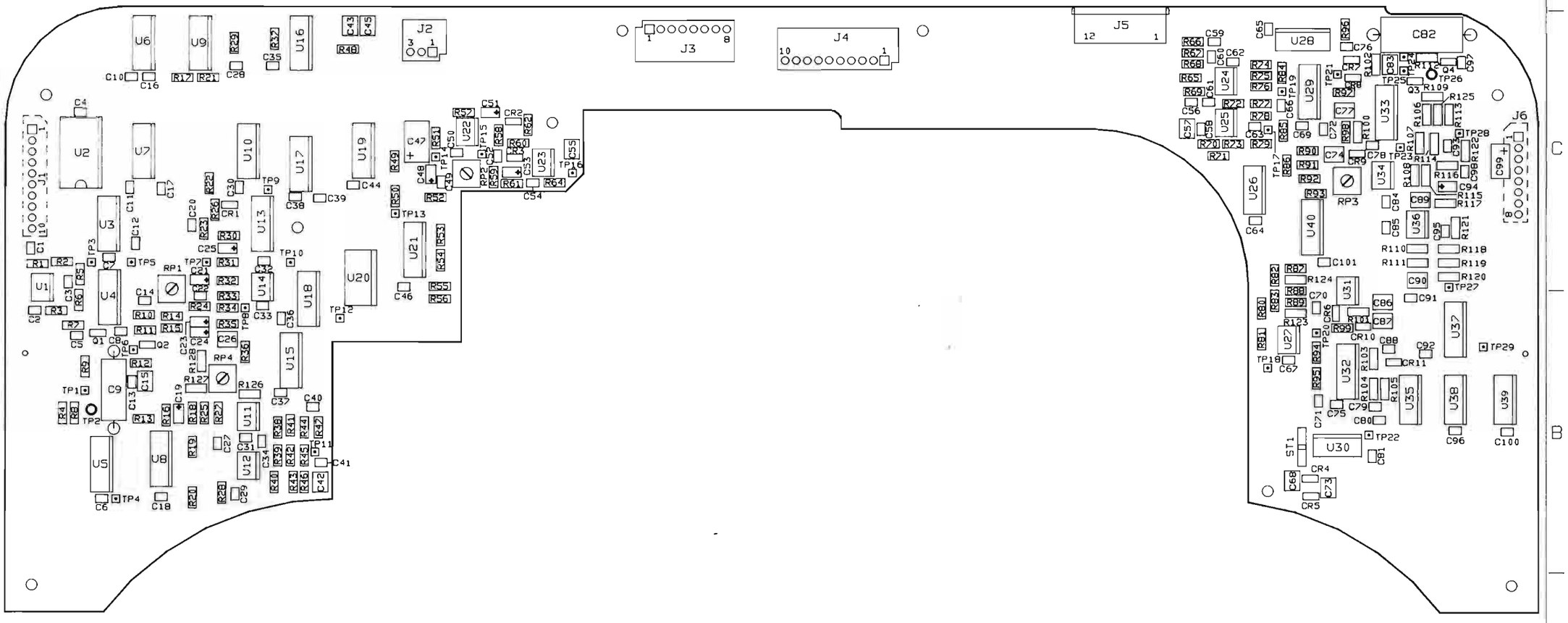

WARNING: HANDLE ONLY AT STATIC SAFE WORK STATION
ATTENTION: MANIPULATION UNIQUEMENT AUTORISEE SUR POSTE DE TRAVAIL PROTEGE
ACHTUNG: HANDHABUNG DAHER NUR AN GESCHÜTZTEN ARBEITSPLÄTZEN ERLAUBT

NAGRA	AUDIO DIVISION	KUDELSKI SA CH-1033 CHESEAUX SWITZERLAND
DRAW BY: GA DATE: 04-04-93	DIGITAL TAPE RECORDER NAGRA D SCANNER & CAPSTAN SERVO PRINTED-WIRING ASSEMBLY	
CHECK BY: DATE:	A7 9110254000	REV B
	RELEASE: 04-04-93 SCALE: ~	SHEET: 1 / 3

This drawing is confidential and may not be divulged in whole or in part to a third party

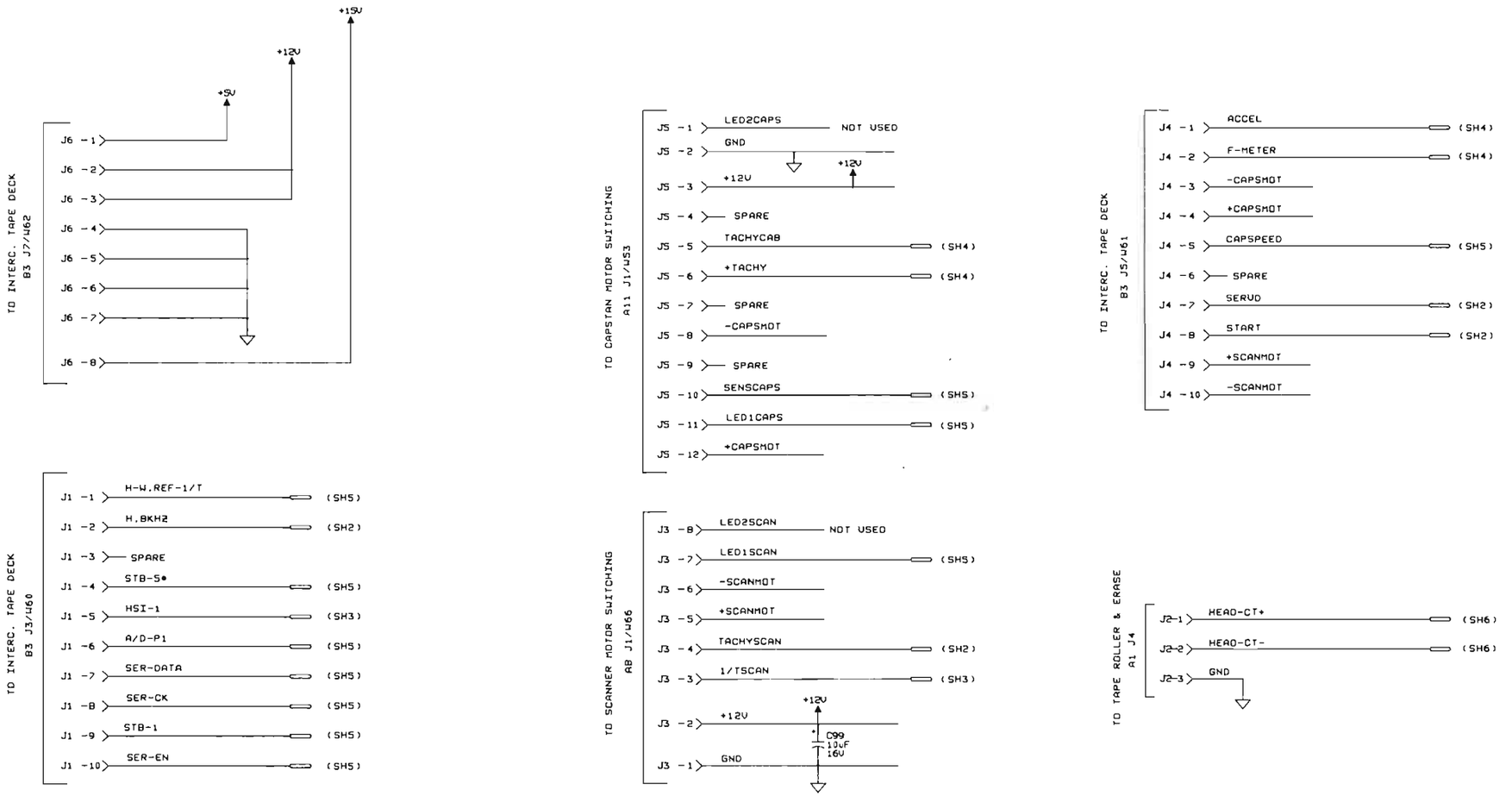

NAGRA	AUDIO DIVISION	KUDELSKI SA CH-1033 CHESEAUX SWITZERLAND
DRAW BY: GA DATE: 04-04-93	DIGITAL TAPE RECORDER NAGRA D SCANNER & CAPSTAN SERVO SCHEMATIC	
CHECK BY: DATE:	A7 0910254000	REV B
	RELEASE: 04-04-93 SCALE: ~	SHEET: 1/6

This drawing is confidential and may not be divulged in whole or in part to a third party

SCANNER SPEED SERVO

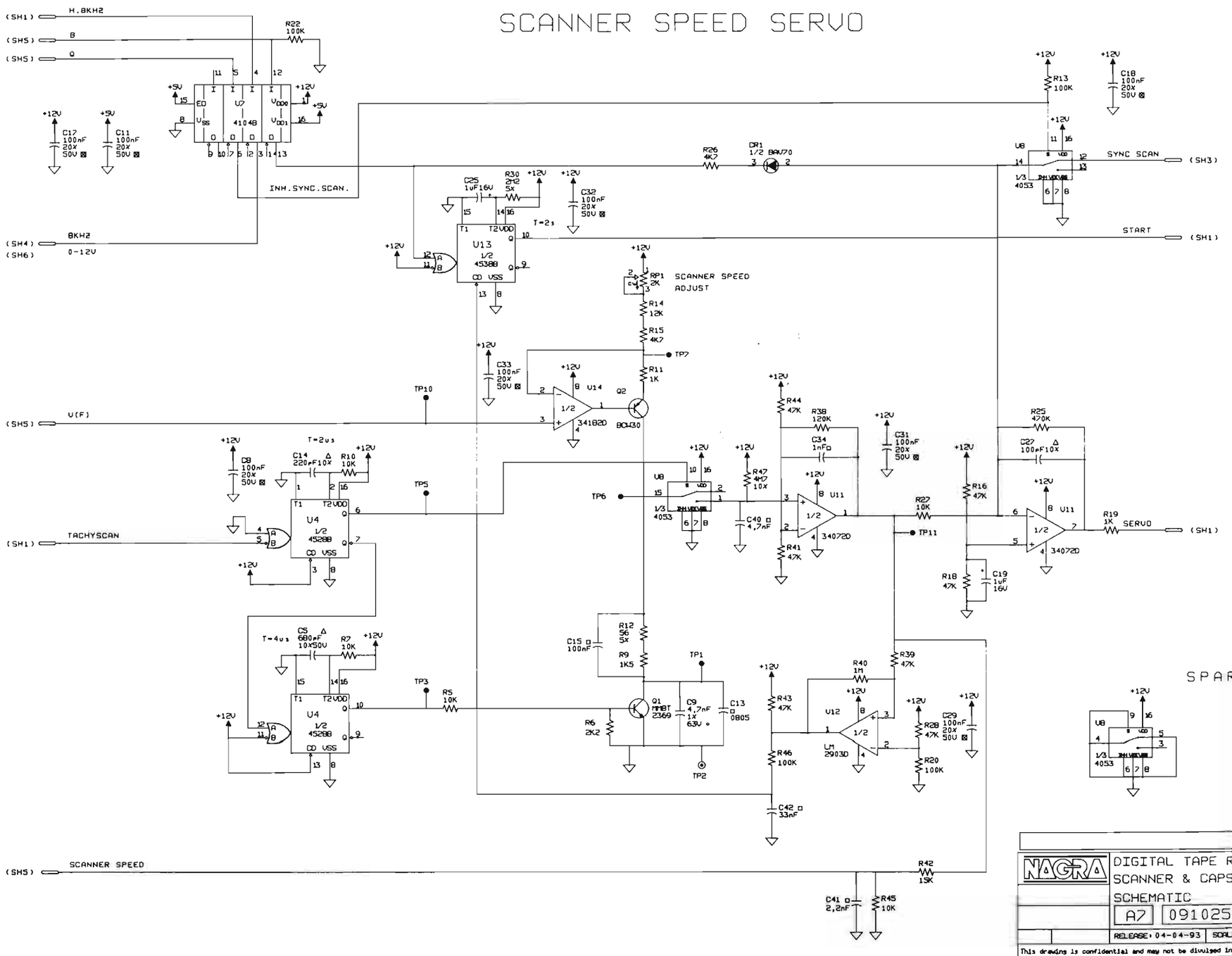

NAGRA

DIGITAL TAPE RECORDER NAGRA D
SCANNER & CAPSTAN SERVO
SCHEMATIC

A7 | 0910254000 | REV B

RELEASE: 04-04-93 | SCALE: ~ | SHEET: 2/6

This drawing is confidential and may not be divulged in whole or in part to a third party

SCANNER PHASE SERVO

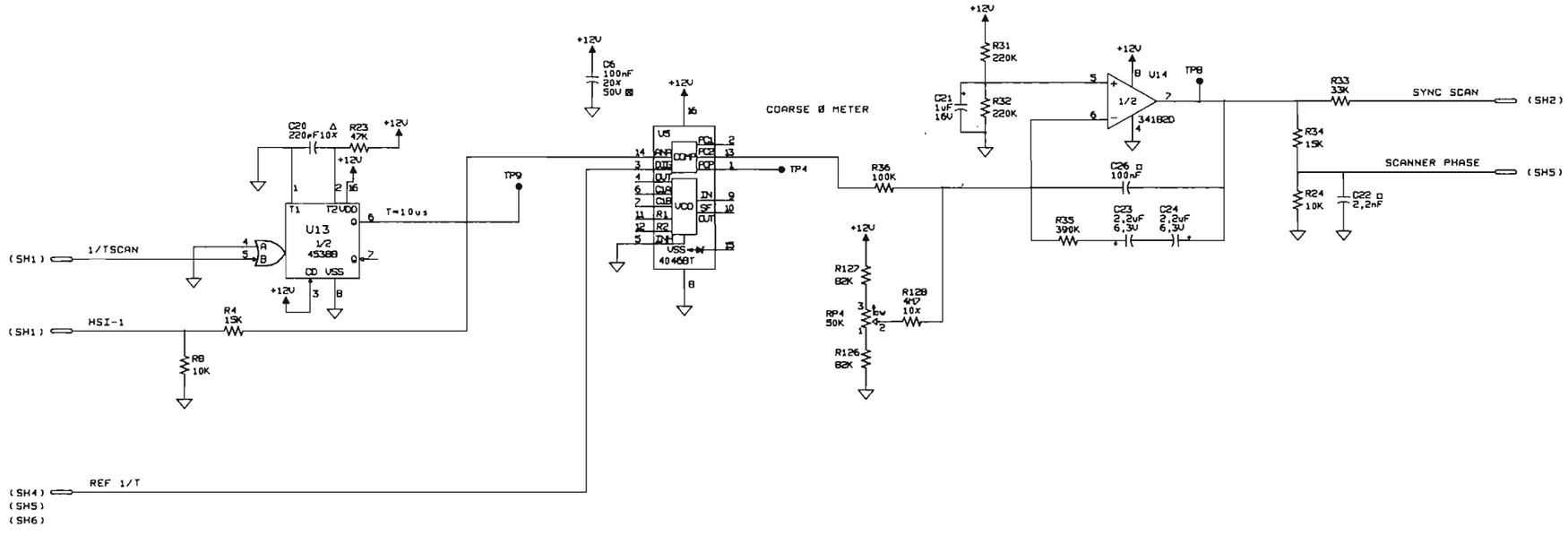

NAGRA

NAGRA	DIGITAL TAPE RECORDER NAGRA D SCANNER & CAPSTAN SERVO SCHEMATIC
	A7 0910254000 REV B
	RELEASE: 04-04-93 SCALE: ~ SHEET: 3/6

This drawing is confidential and may not be divulged in whole or in part to a third party

CAPSTAN SERVO

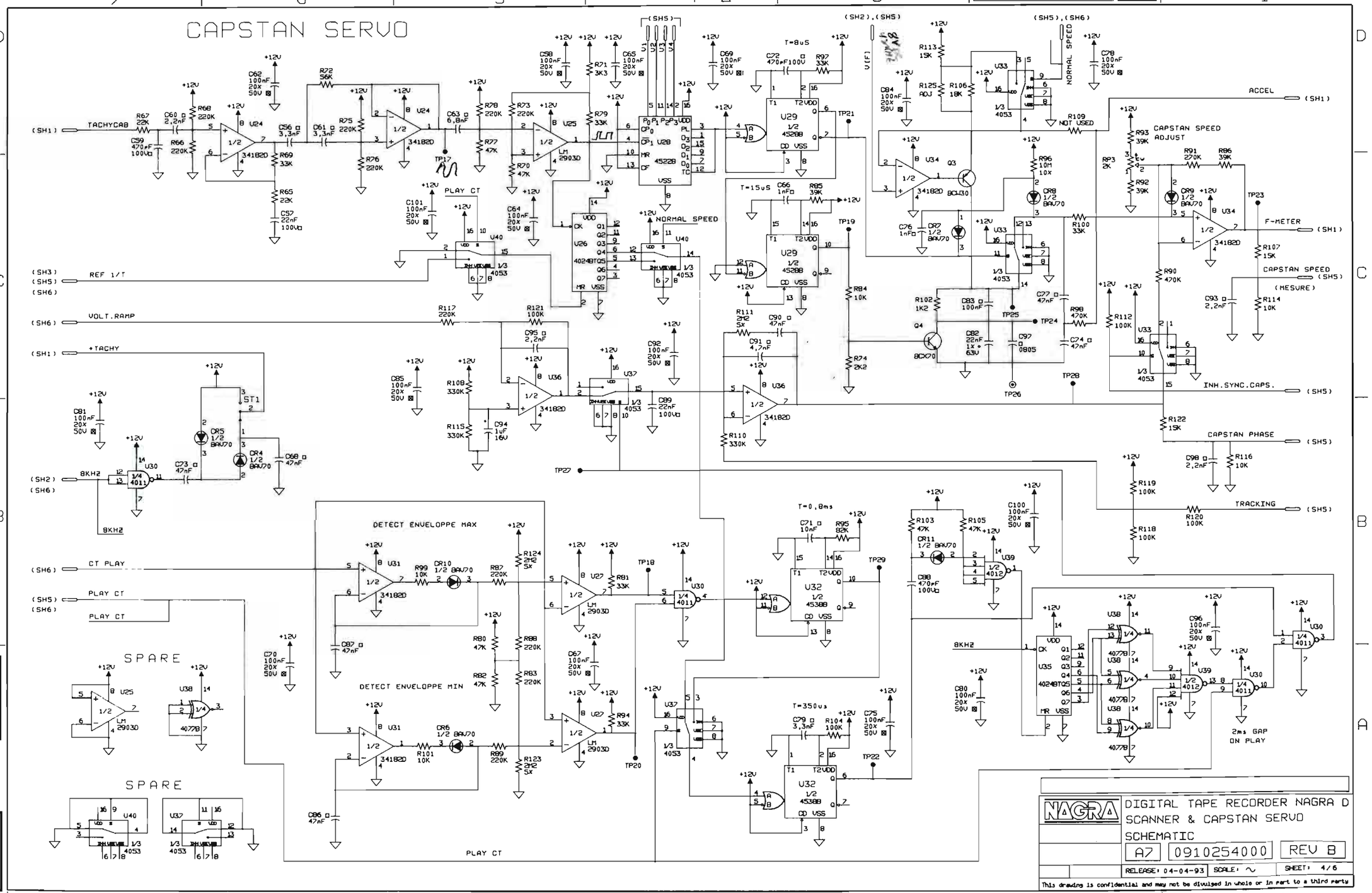

MICROPROCESSOR BUS

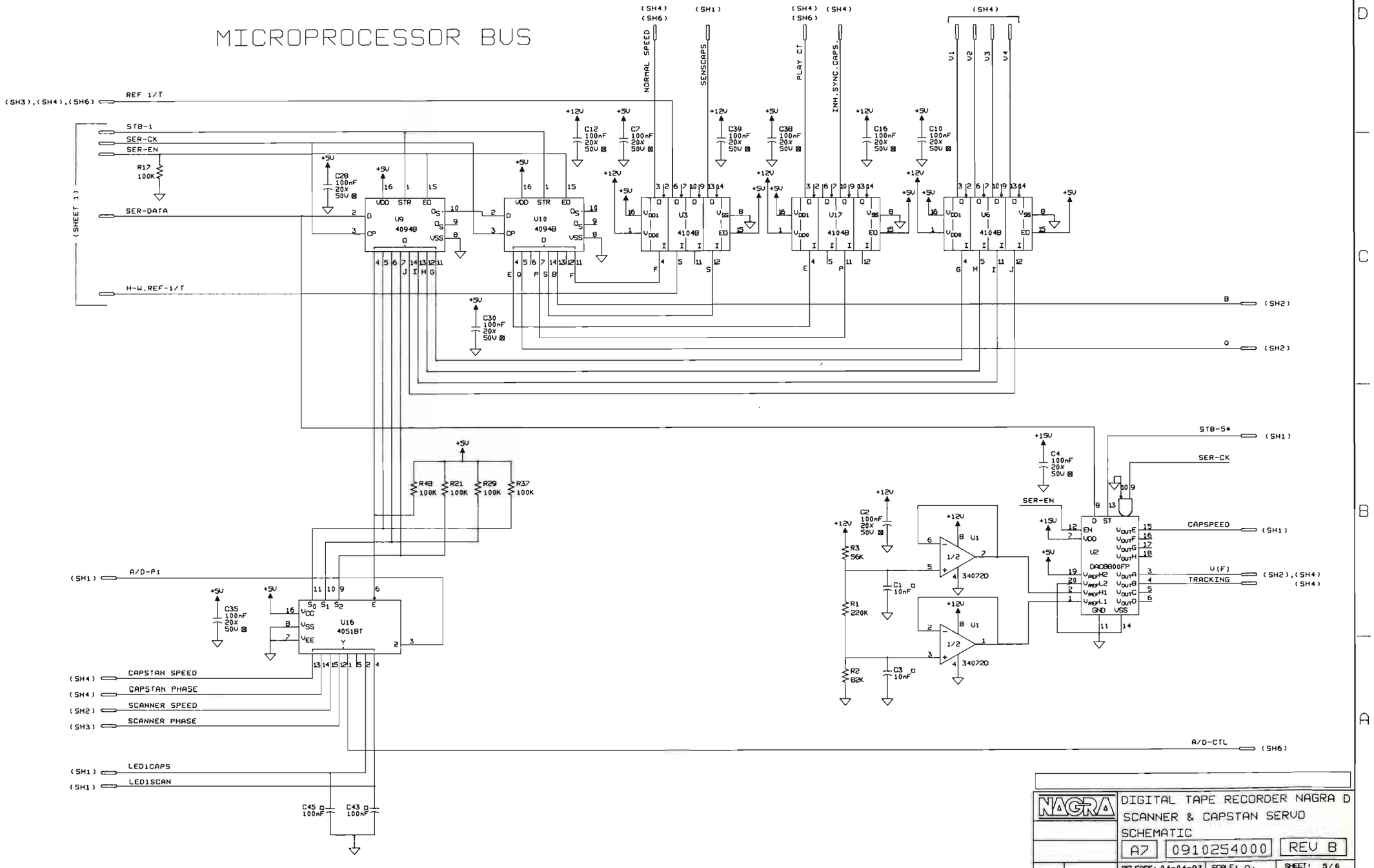

NAGRA

DIGITAL TAPE RECORDER NAGRA D
SCANNER & CAPSTAN SERVO
SCHEMATIC

A7 | 0910254000 | REV B

RELEASE: 04-04-93 | SCALE: ~ | SHEET: 5/6

This drawing is confidential and may not be divulged in whole or in part to a third party

CONTROL TRACK

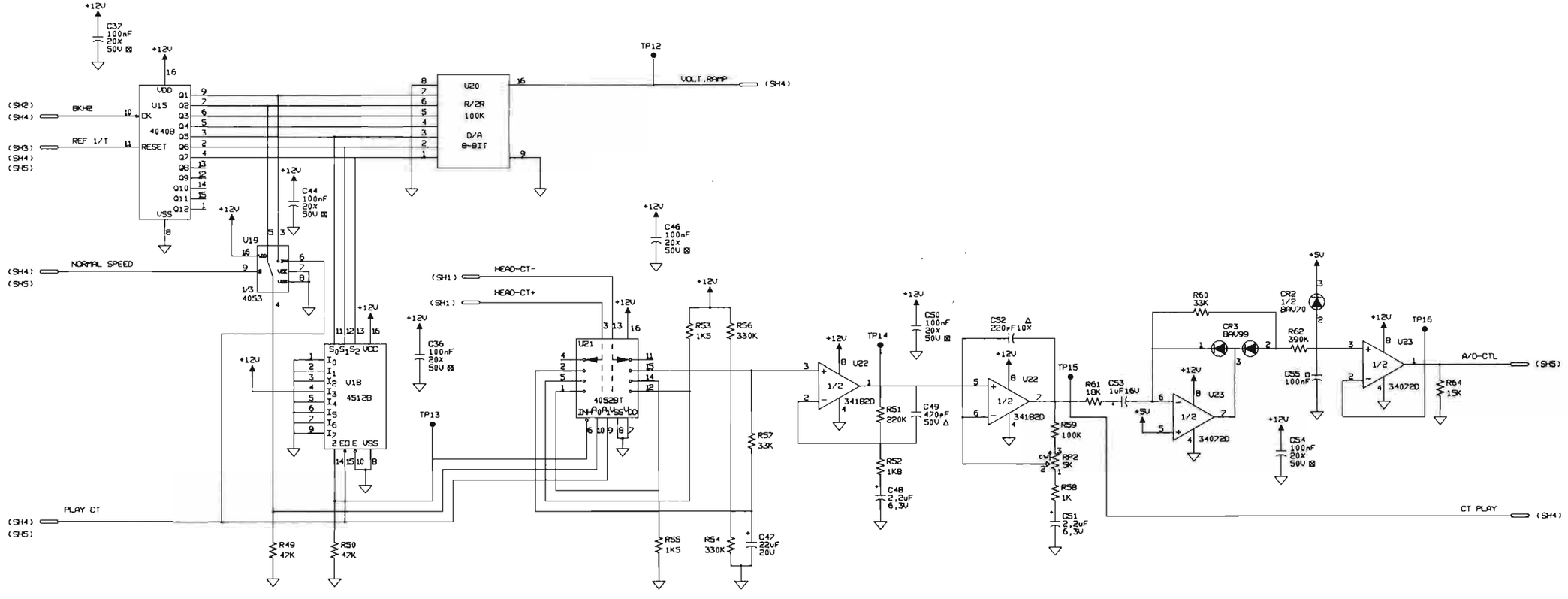

SPARE

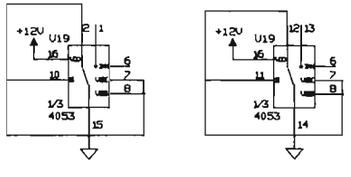

NAGRA	DIGITAL TAPE RECORDER NAGRA D SCANNER & CAPSTAN SERVO SCHEMATIC
A7	0910254000 REV B
RELEASE: 04-04-93	SCALE: ~ SHEET: 6/6

This drawing is confidential and may not be divulged in whole or in part to a third party

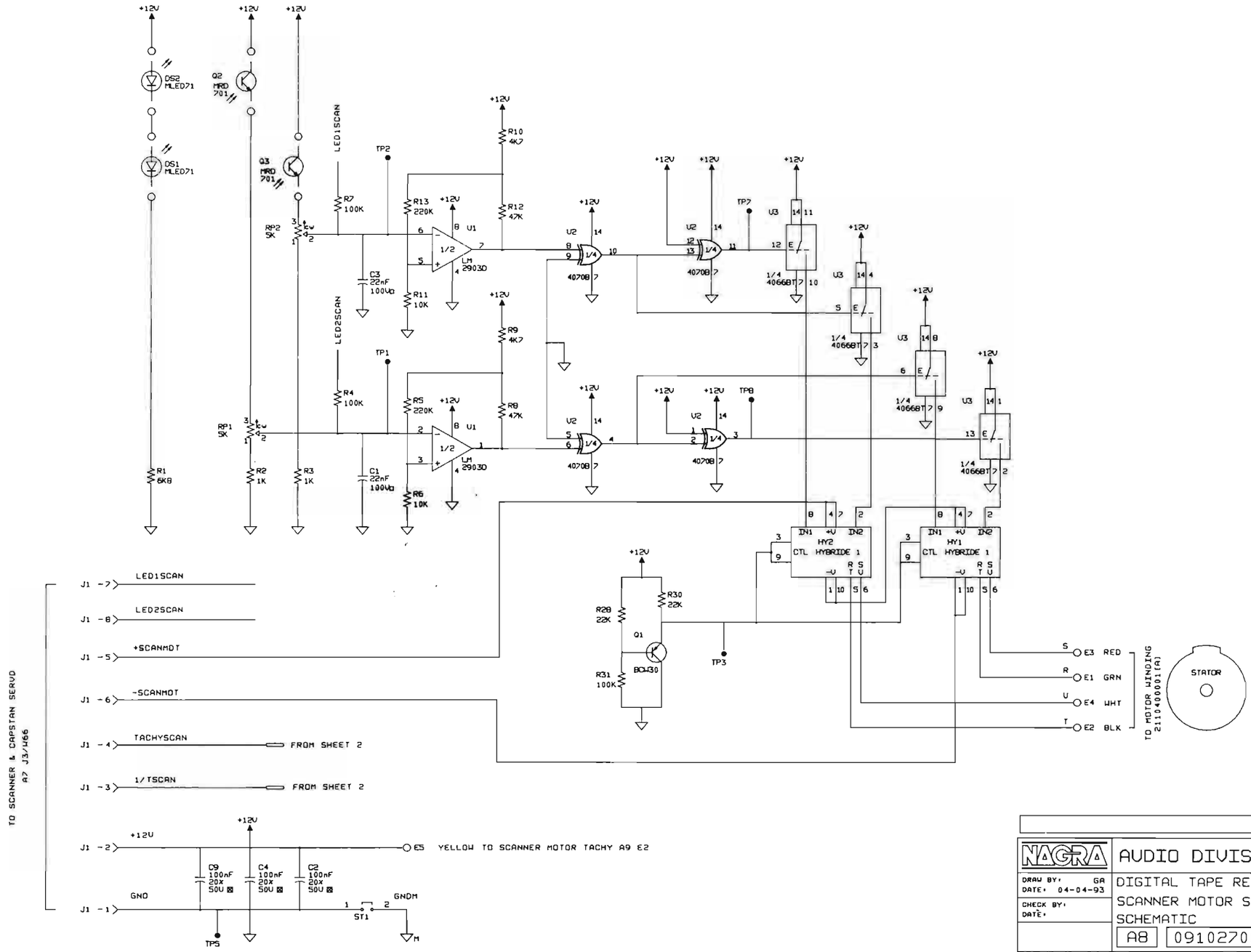

NAGRA	AUDIO DIVISION	KUDELSKI SA CH-1033 CHESEAUX SWITZERLAND
DRAW BY: GA DATE: 04-04-93	DIGITAL TAPE RECORDER NAGRA D	
CHECK BY: DATE:	SCANNER MOTOR SWITCHING SCHEMATIC	
	A8 0910270000 REV A	
	RELEASE: 04-04-93 SCALE: ~ SHEET: 1/2	

This drawing is confidential and may not be divulged in whole or in part to a third party

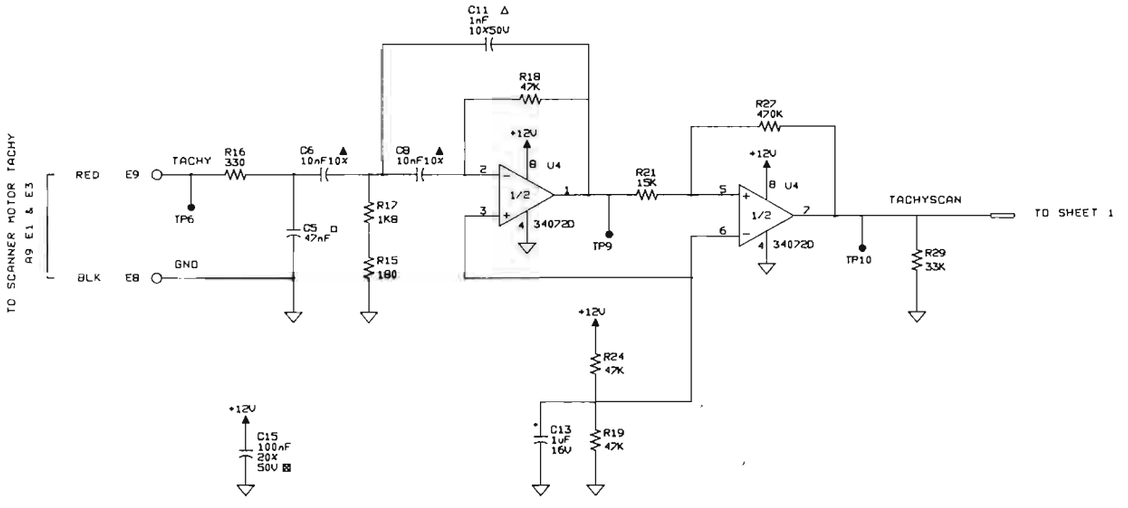

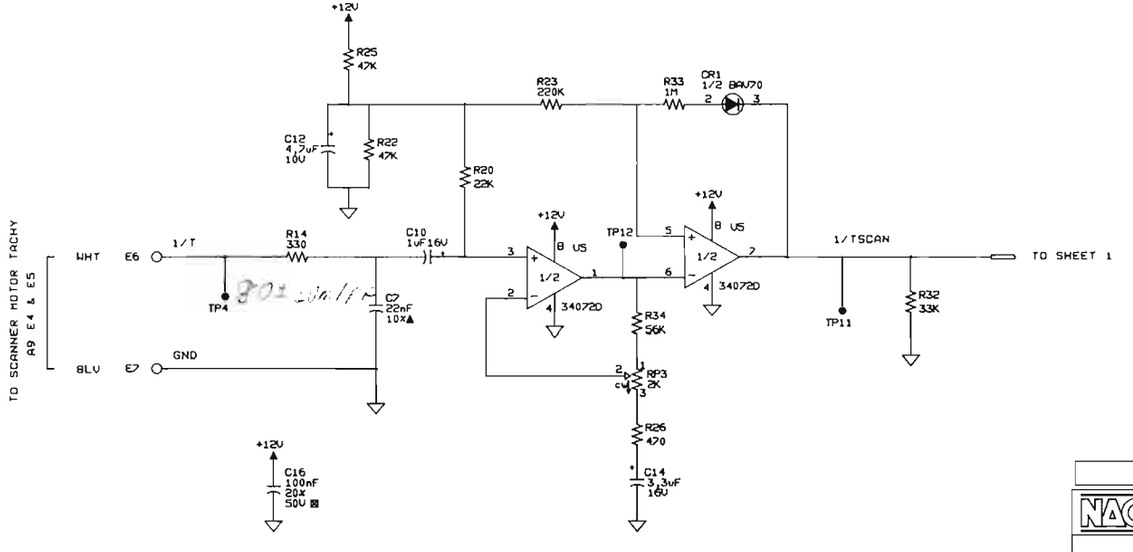

NAGRA

DIGITAL TAPE RECORDER NAGRA D
SCANNER MOTOR SWITCHING
SCHEMATIC

A8 | 0910270000 | REV A

RELEASE: 04-04-93 | SCALE: ~ | SHEET: 2/2

This drawing is confidential and may not be divulged in whole or in part to a third party

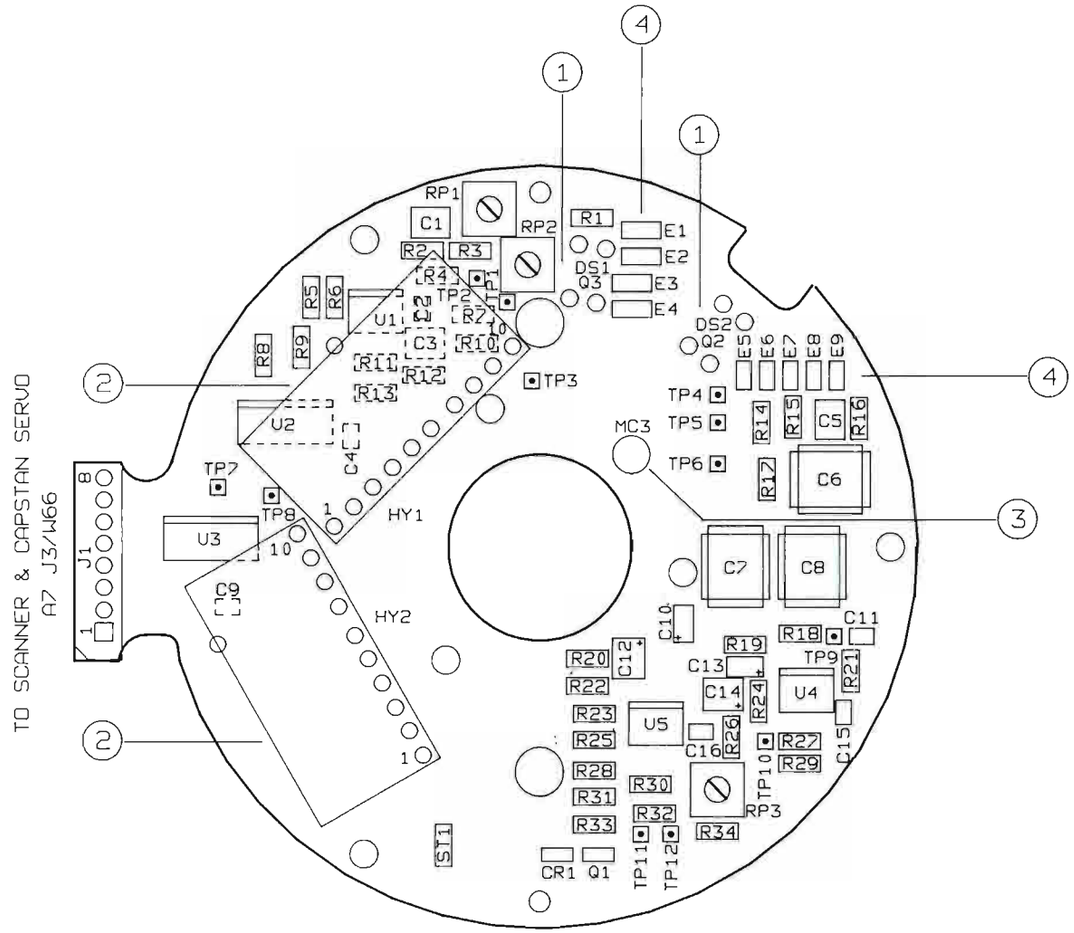

DETAIL A

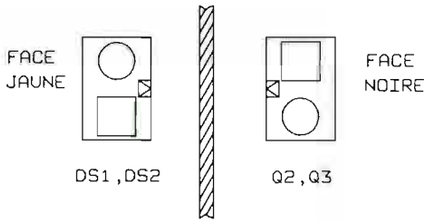

SENS DU MONTAGE DES OPTO-ELEMENTS
SUR LAYER 2

DETAIL B

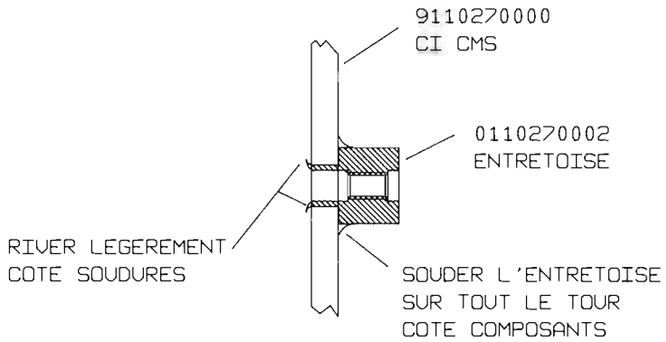

RIVETAGE, SOUDAGE DE L'ENTRETOISE
DE FIXATION DU BALAI DE MASSE

NOTES:

1. VOIR DETAIL A
2. LES HYBRIDES HY1 ET HY2 DOIVENT ETRE SOUDES APRES LES AUTRES COMPOSANTS
3. VOIR DETAIL B
4. COLOR OF WIRES ON SOLDER PADS

E1 : GREEN	E5 : YELLOW
E2 : BLACK	E6 : WHITE
E3 : RED	E7 : BLUE
E4 : WHITE	E8 : BLACK
	E9 : RED

WARNING: HANDLE ONLY AT STATIC SAFE WORK STATION
ATTENTION: MANIPULATION UNIQUEMENT AUTORISEE SUR POSTE DE TRAVAIL PROTEGE
ACHTUNG: HANDHABUNG DAHER NUR AN GESCHÜTZTEN ARBEITSPLÄTZEN ERLAUBT

NAGRA	AUDIO DIVISION	KUDELSKI SA CH-1033 CHESEAUX SWITZERLAND
DRAW BY: GA DATE: 04-04-93	DIGITAL TAPE RECORDER NAGRA D	
CHECK BY: DATE:	SCANNER MOTOR SWITCHING	
	PRINTED-WIRING ASSEMBLY	
	AB 9110270000	REV A
	RELEASE: 04-04-93 SCALE: ~	SHEET: 1 / 1

This drawing is confidential and may not be divulged in whole or in part to a third party

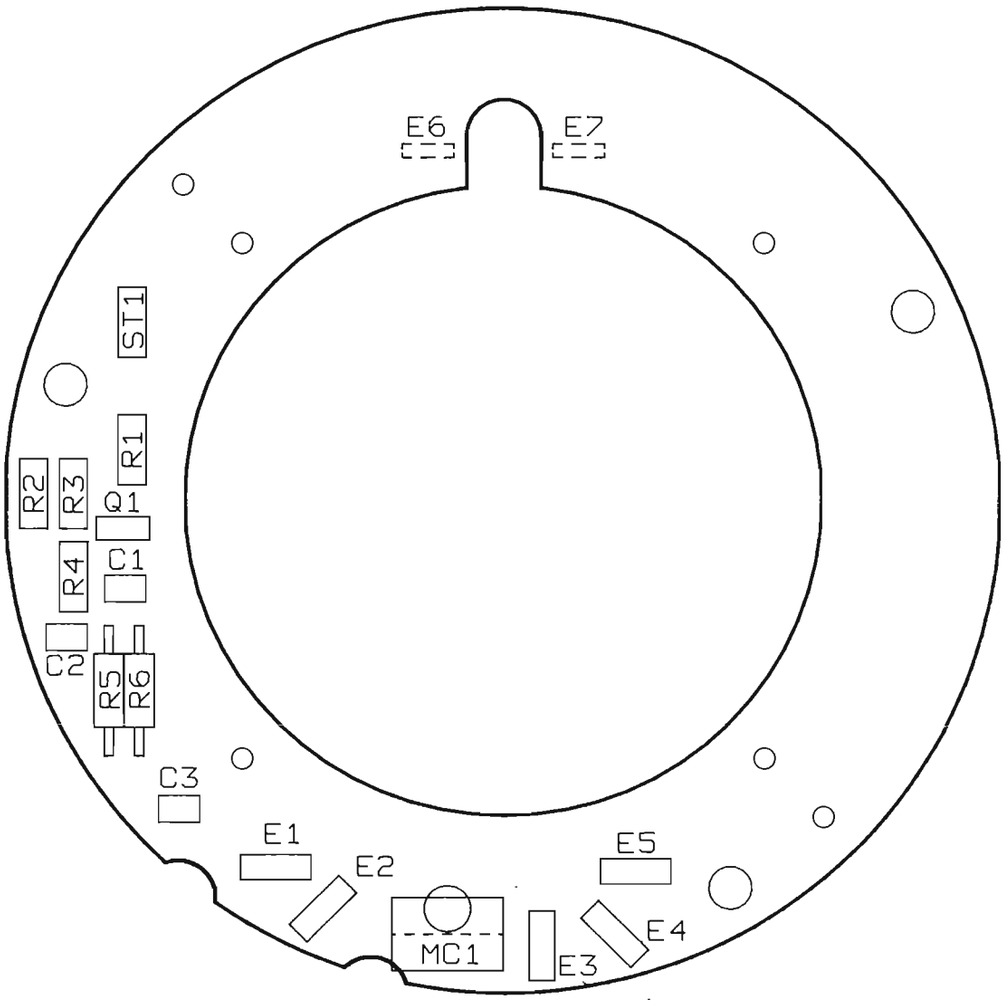

E1 (RED) TACHY
E2 (YEL) +12V
E3 (BLK) GND
E4 (WHT)] 1/REV.
E5 (BLU)]

NAGRA	AUDIO DIVISION	KUDELSKI SA CH-1033 CHESEAUX SWITZERLAND
DRAW BY: GA DATE: 04-04-93	DIGITAL TAPE RECORDER NAGRA D SCANNER MOTOR TACHY PRINTED-WIRING ASSEMBLY	
CHECK BY: DATE:	A9 9110272000 REV A	
	RELEASE: 04-04-93 SCALE: ~	SHEET: 1 / 1

This drawing is confidential and may not be divulged in whole or in part to a third party

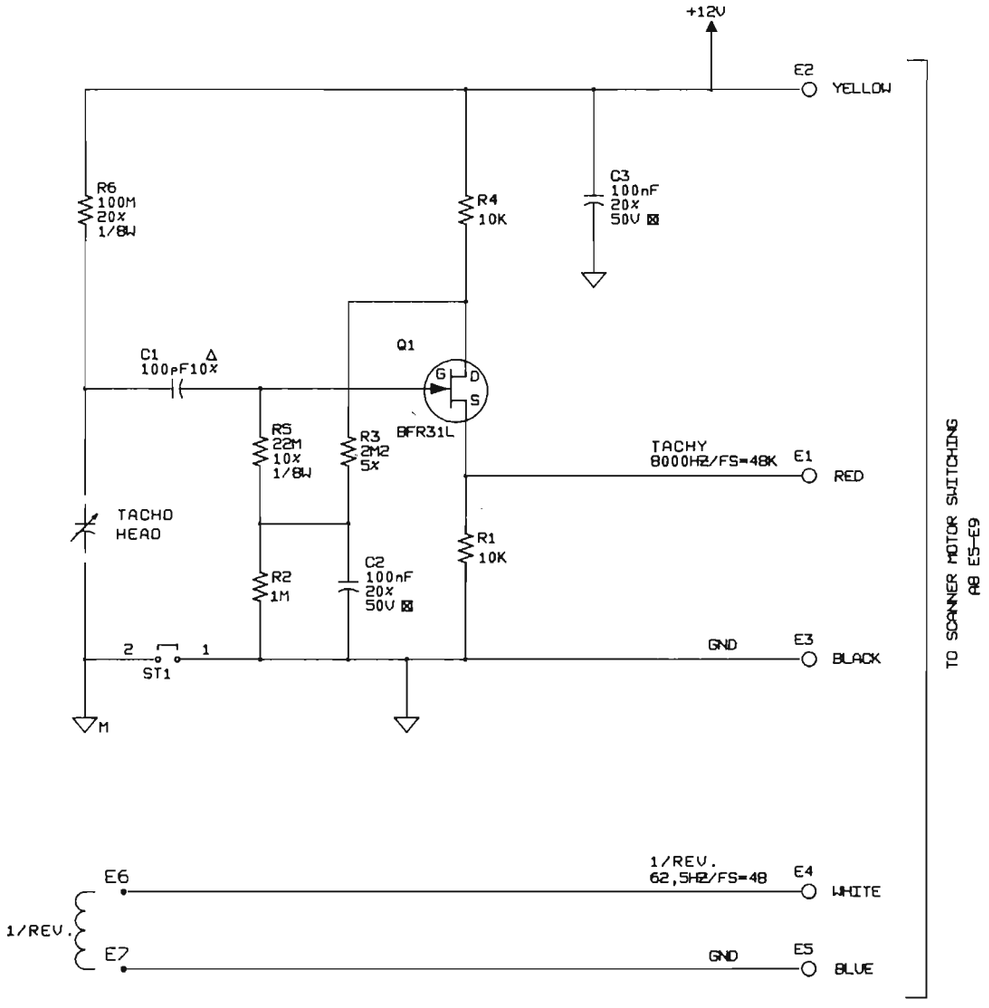

NAGRA	AUDIO DIVISION	KUDELSKI SA CH-1033 CHESEAUX SWITZERLAND
DRAW BY: GA DATE: 04-04-93	DIGITAL TAPE RECORDER NAGRA D SCANNER MOTOR TACHY SCHEMATIC	
CHECK BY: DATE:	A9 / 0910272000	REV A
	RELEASE: 04-04-93 / SCALE: ~	SHEET: 1/1

This drawing is confidential and may not be divulged in whole or in part to a third party

9110275000 [A] 1/1

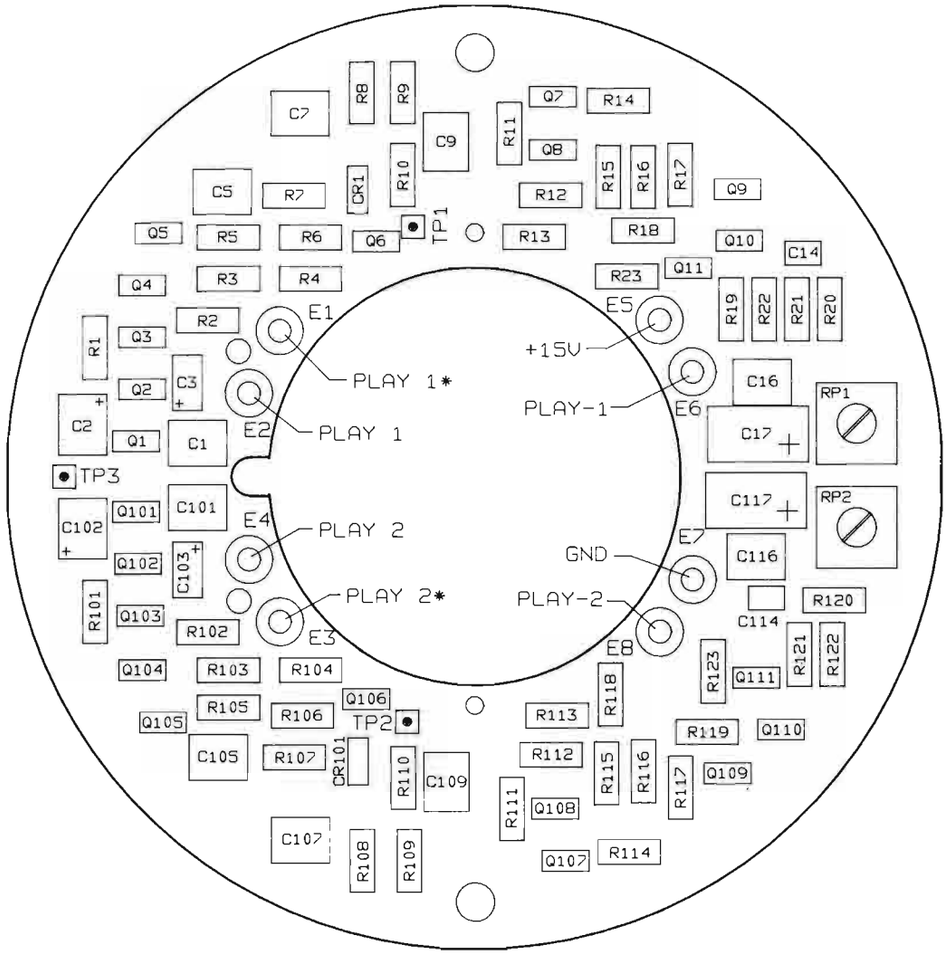

LAYER 1-TOP VIEW

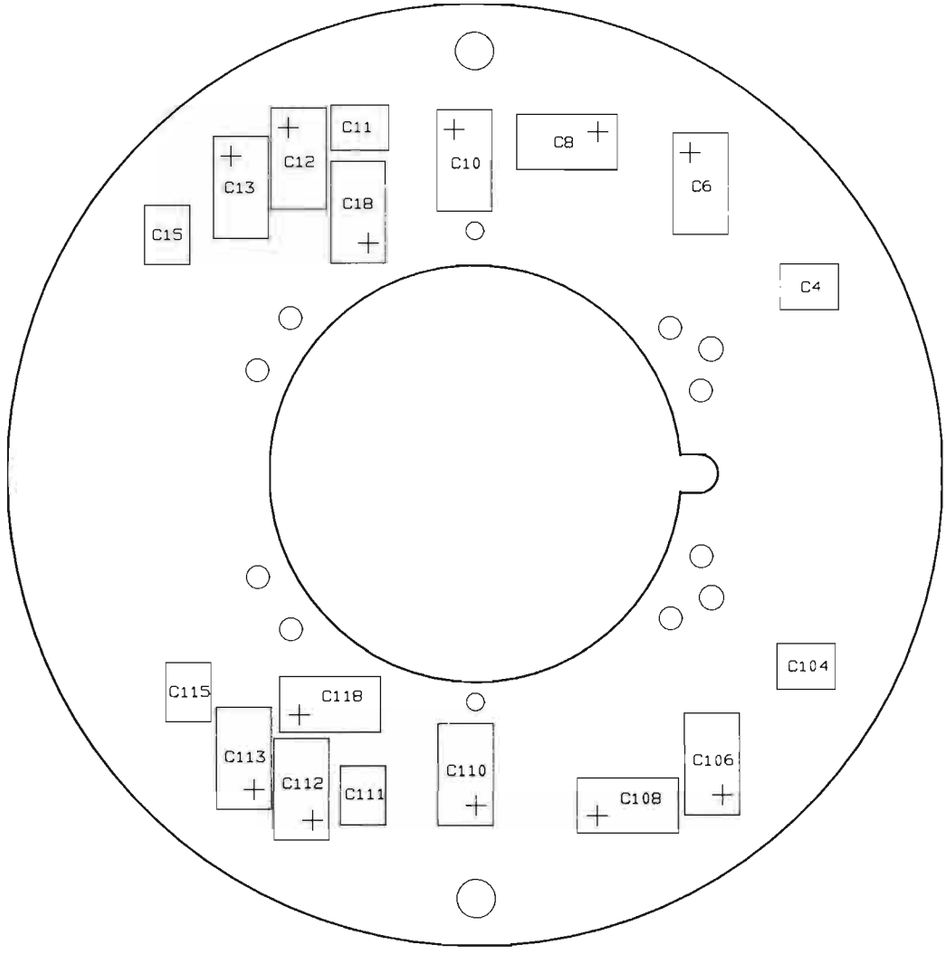

LAYER 2-BOTTOM VIEW

WARNING: HANDLE ONLY AT STATIC SAFE WORK STATION
ATTENTION: MANIPULATION UNIQUEMENT AUTORISEE SUR POSTE DE TRAVAIL PROTEGE
ACHTUNG: HANDHABUNG DAHER NUR AN GESCHÜTZTEN ARBEITSPLÄTZEN ERLAUBT

NAGRA	AUDIO DIVISION	KUDELSKI SA CH-1033 CHESEAUX SWITZERLAND
DRAW BY: GA DATE: 04-04-93	DIGITAL TAPE RECORDER NAGRA D	
CHECK BY: DATE:	DIGITAL PLAYBACK PREAMP.	
	PRINTED-WIRING ASSEMBLY	
	A10 9110275000 REV A	
	RELEASE: 04-04-93 SCALE: ~	SHEET: 1 / 1

This drawing is confidential and may not be divulged in whole or in part to a third party

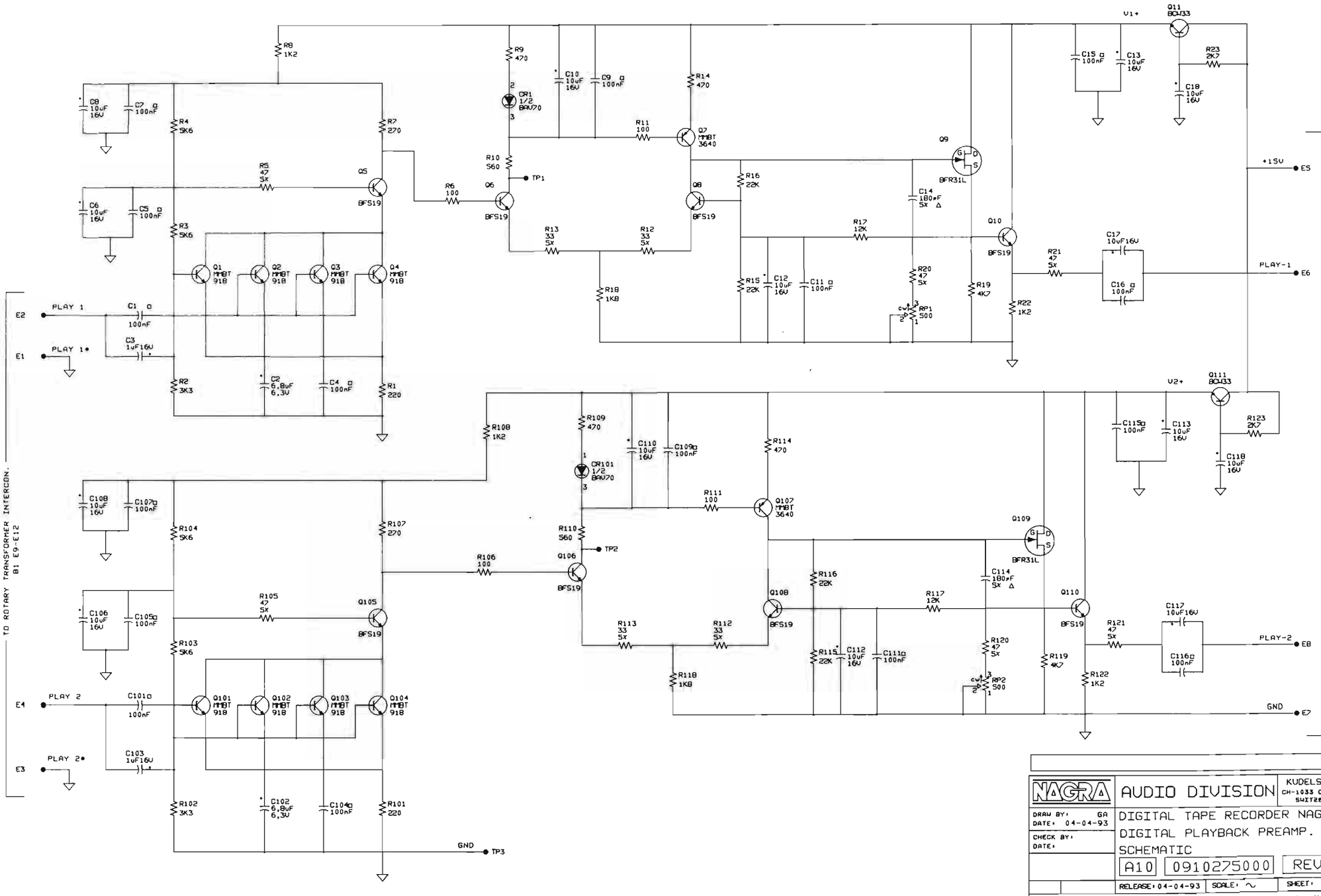

NAGRA

NAGRA	AUDIO DIVISION — KUDELSKI SA, CH-1033 CHESEAUX, SWITZERLAND
DRAW BY: GA DATE: 04-04-93	DIGITAL TAPE RECORDER NAGRA D DIGITAL PLAYBACK PREAMP. SCHEMATIC
CHECK BY: DATE:	A10 · 0910275000 · REV A
	RELEASE: 04-04-93 · SCALE: ~ · SHEET: 1/1

This drawing is confidential and may not be divulged in whole or in part to a third party

4

June 1994

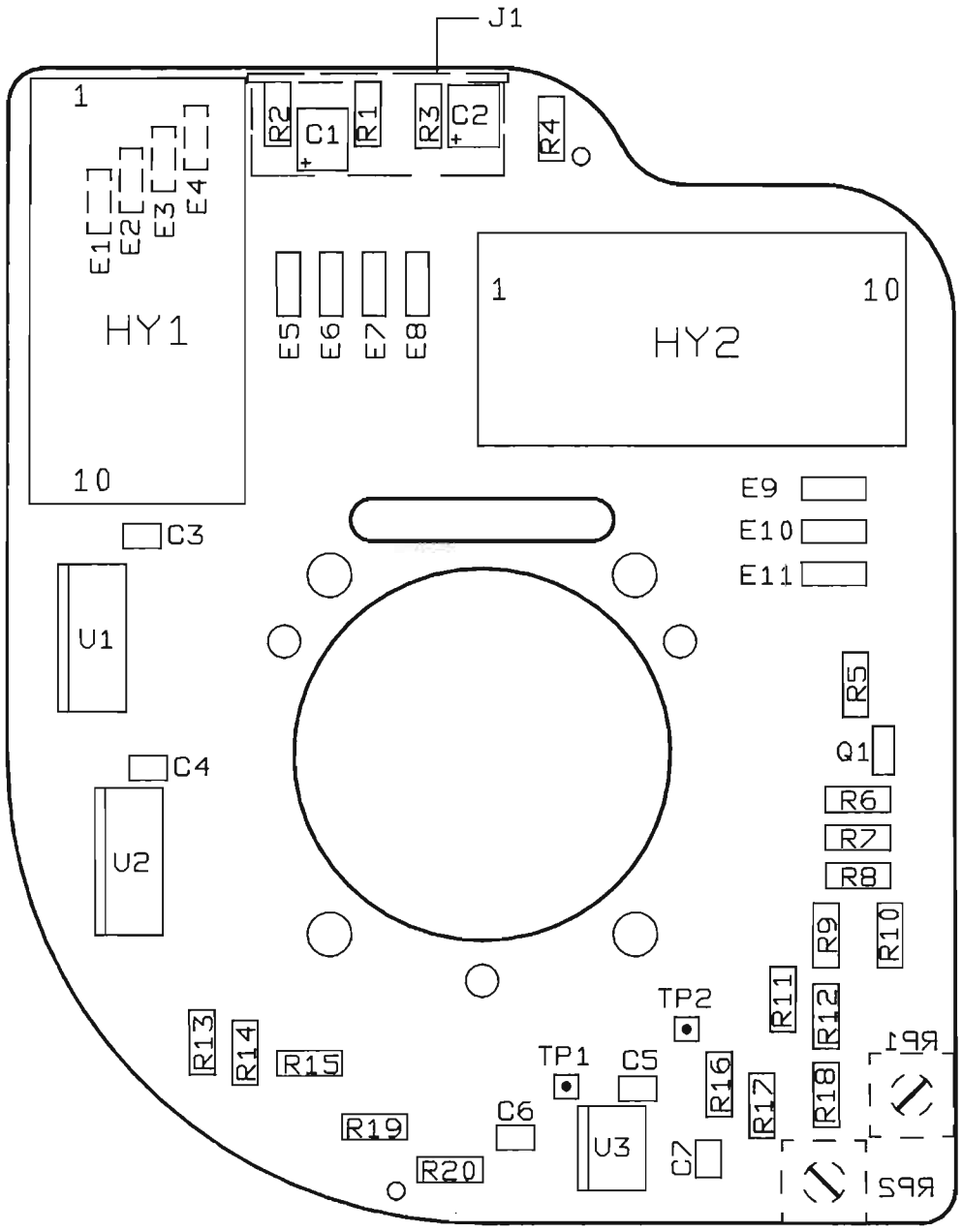

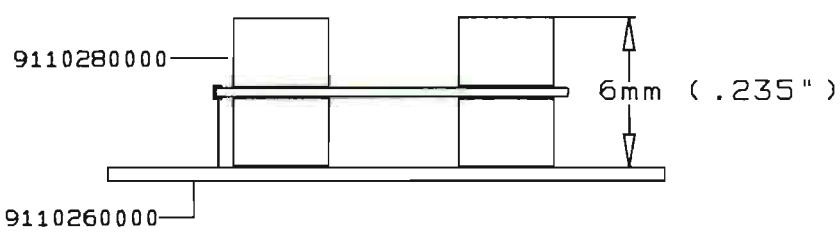

NAGRA	AUDIO DIVISION	KUDELSKI SA CH-1033 CHESEAUX SWITZERLAND
DRAW BY: JC DATE: 04-04-93	DIGITAL TAPE RECORDER NAGRA D CAPSTAN MOTOR SWITCHING PRINTED-WIRING ASSEMBLY	
CHECK BY: DATE:	A11 9110260000	REV C
	RELEASE: 04-04-93 SCALE: ~	SHEET: 1 / 1

This drawing is confidential and may not be divulged in whole or in part to a third party

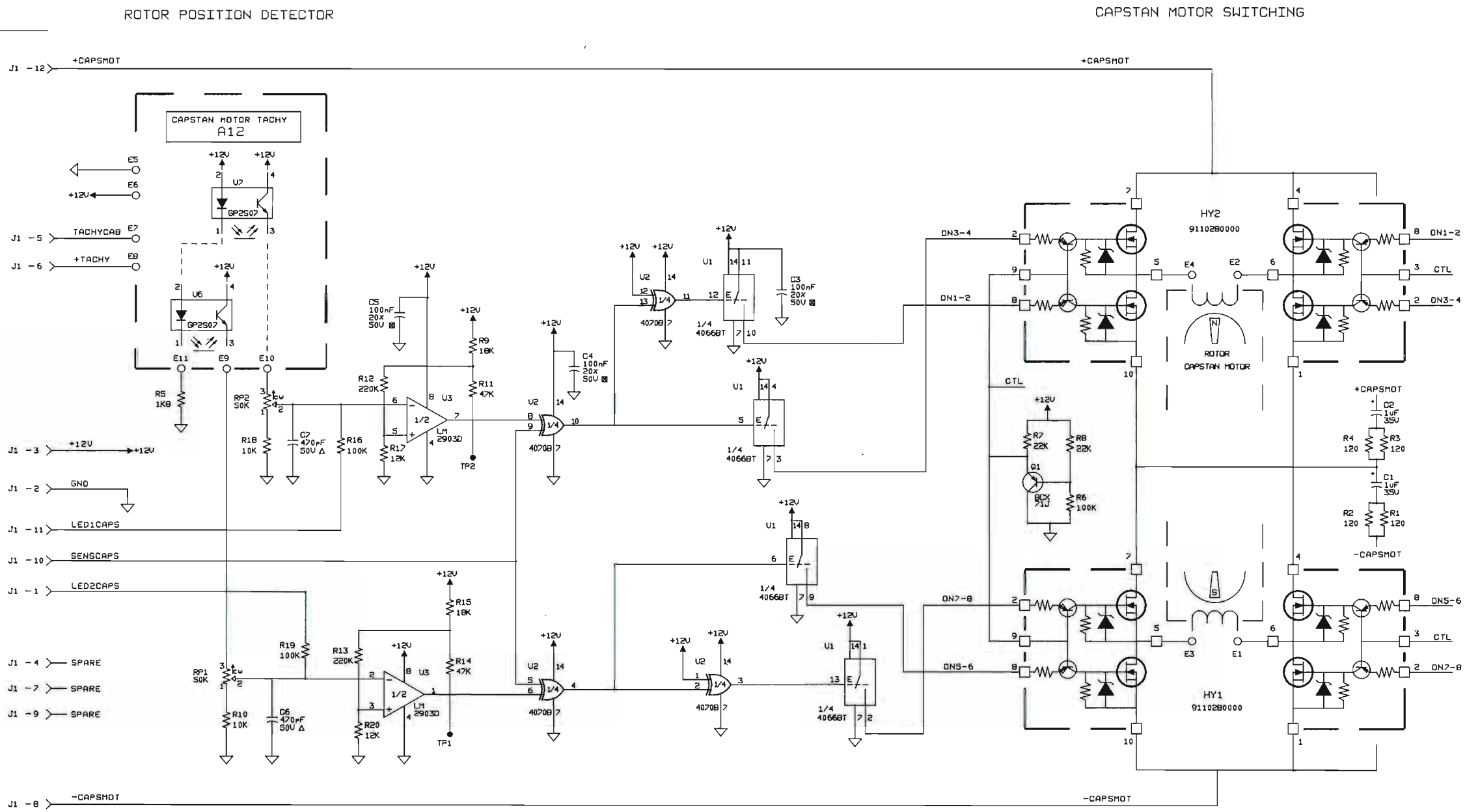

NAGRA

NAGRA	AUDIO DIVISION	KUDELSKI SA CH-1033 CHESEAUX SWITZERLAND
DRAW BY: JC DATE: 04-04-93	DIGITAL TAPE RECORDER NAGRA D CAPSTAN MOTOR SWITCHING SCHEMATIC	
CHECK BY: DATE:	A11 0910260000	REV C
	RELEASE: 04-04-93 SCALE: ∿	SHEET: 1/1

This drawing is confidential and may not be divulged in whole or in part to a third party

NOTES:

1. V1,V2 A SOUDER AVEC GABARIT
2. VOIR DETAIL A
3. R2,R5 PLIAGE SN

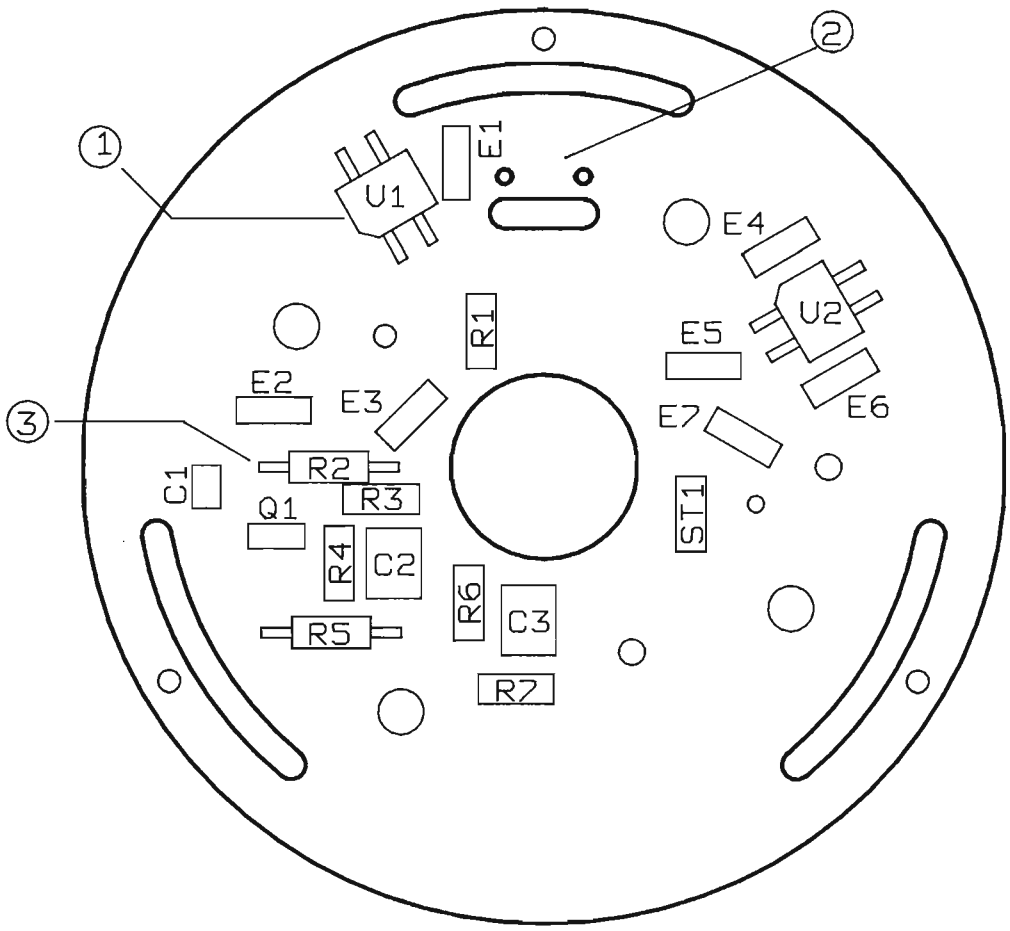

DETAIL A ASSEMBLAGE 9110262000 + BLINDAGE
VOIR GAMME OPERTOIRE 7110070000

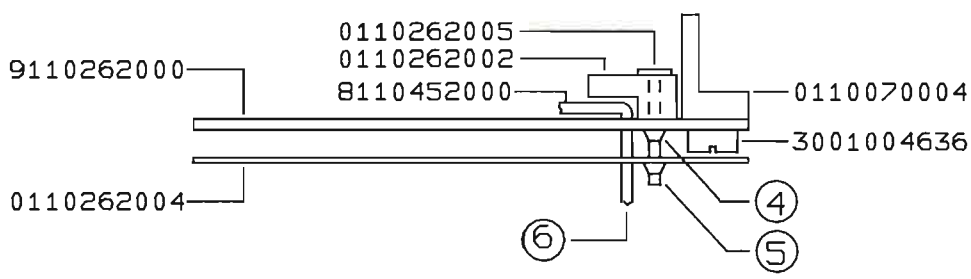

4. PHASE 1:FIXATION BRIDE CIRCUIT + MISE A LA MASSE DU CLOU
5. PHASE 2:FIXATION + MISE A LA MASSE DU BLINDAGE 0110262004
6. CABLAGE 8110452000

NAGRA	AUDIO DIVISION	KUDELSKI SA CH-1033 CHESEAUX SWITZERLAND
DRAW BY: JC DATE: 04-04-93	DIGITAL TAPE RECORDER NAGRA D	
CHECK BY: DATE:	CAPSTAN MOTOR TACHY	
	PRINTED-WIRING ASSEMBLY	
	A12 9110262000 REV B	
	RELEASE: 04-04-93 SCALE: ~	SHEET: 1 / 1

This drawing is confidential and may not be divulged in whole or in part to a third party

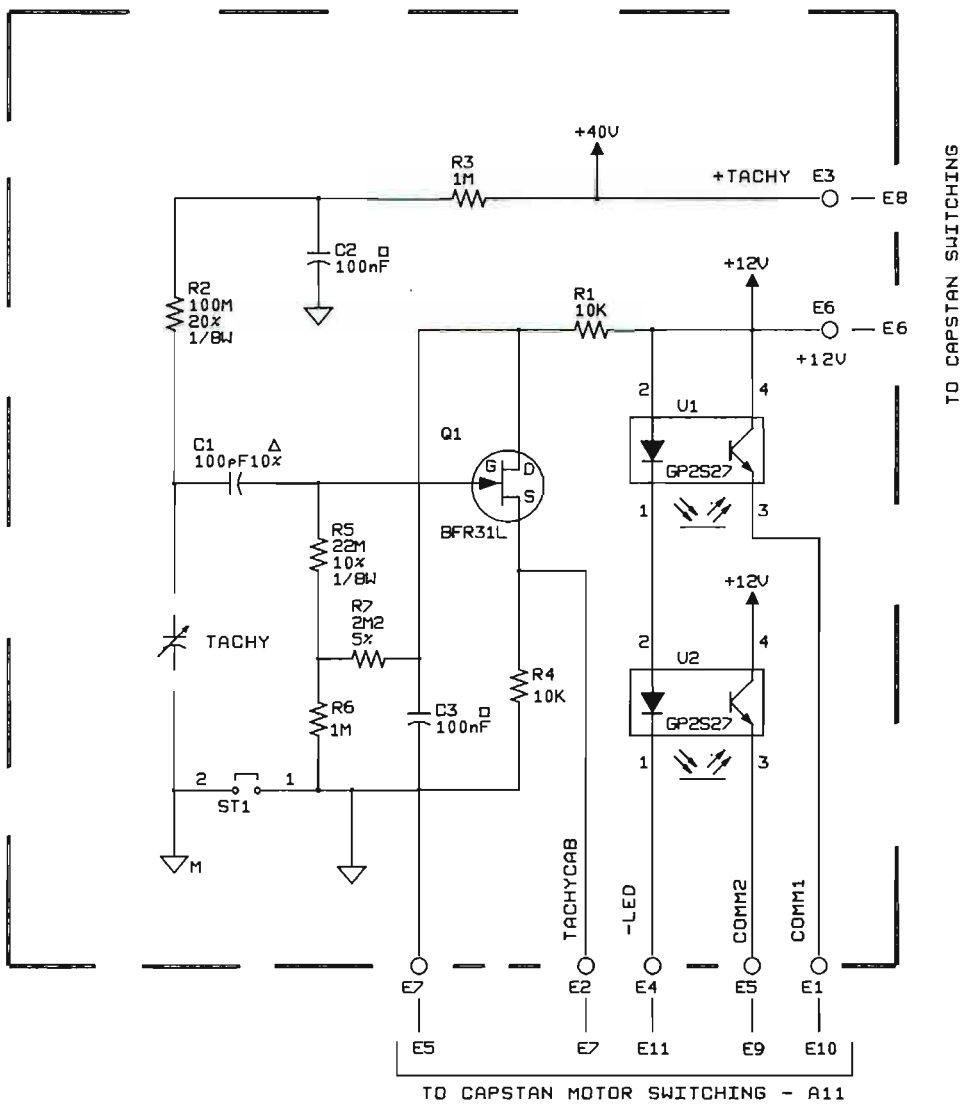

NAGRA

NAGRA	AUDIO DIVISION	KUDELSKI SA CH-1033 CHESEAUX SWITZERLAND
DRAW BY: JC DATE: 04-04-93	DIGITAL TAPE RECORDER NAGRA D CAPSTAN MOTOR TACHY SCHEMATIC	
CHECK BY: DATE:	A12 / 0910262000	REV B
	RELEASE: 04-04-93 / SCALE: ~	SHEET: 1/1

This drawing is confidential and may not be divulged in whole or in part to a third party

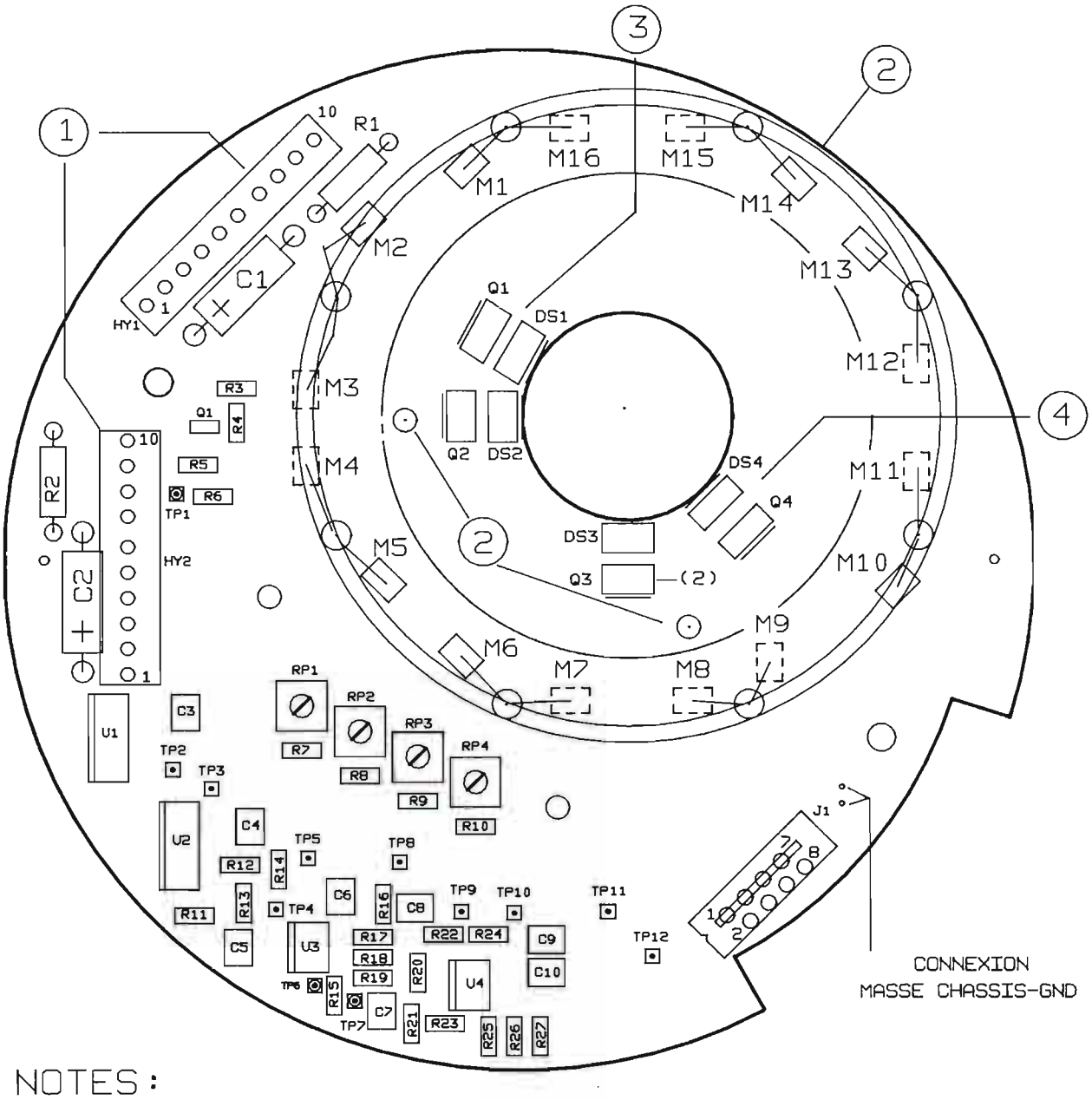

NOTES:

( ) ASSEMBLAGE DU CIRCUIT SUIVANT GAMMME OPERATOIRE 9110265000[A]

(1) SOUDER HY1,HY2 SURELEVES ET INCLINES LA HAUTEUR FINALE
NE DOIT PAS DEPASSER LE BOBINAGE MOTEUR

(2) COLLER BOBINAGE,GOUJONS,BLINDAGE SOUS BOBINAGE
SUIVANT GAMME OPERATOIRE

(3) SOUDER Q1,Q2,DS1,DS2,A 4mm

(4) SOUDER Q3,Q4,DS3,DS4
PLAQUES AU CUICUIT

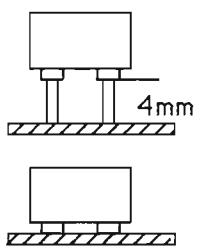

SENS MONTAGE DS ET Q

DS1-4 K A — COTE BRUN

Q1-4 C E — COTE NOIR

WARNING: HANDLE ONLY AT STATIC SAFE WORK STATION
ATTENTION: MANIPULATION UNIQUEMENT AUTORISEE SUR POSTE DE TRAVAIL PROTEGE
ACHTUNG: HANDHABUNG DAHER NUR AN GESCHÜTZTEN ARBEITSPLÄTZEN ERLAUBT

NAGRA	AUDIO DIVISION	KUDELSKI SA CH-1033 CHESEAUX SWITZERLAND
DRAW BY: JFN DATE: 11-02-92	DIGITAL TAPE RECORDER NAGRA D	
CHECK BY: DATE:	REEL MOTOR SWITCHING PRINTED-WIRING ASSEMBLY	
	A13 9110265000 REV A	
	RELEASE: 08-01-93 SCALE: ~	SHEET: 1 / 1

This drawing is confidential and may not be divulged in whole or in part to a third party

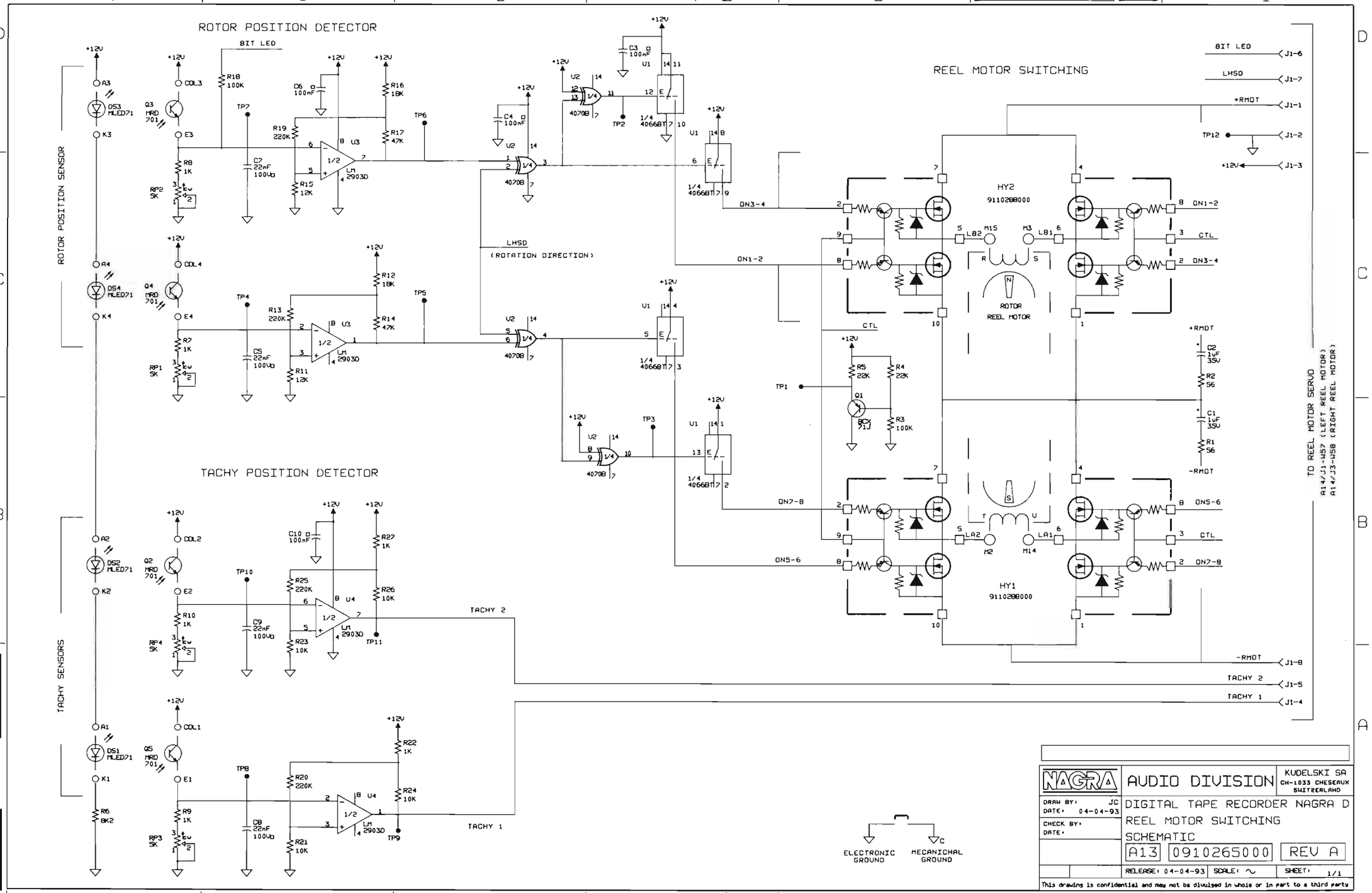

NAGRA	AUDIO DIVISION	KUDELSKI SA CH-1033 CHESEAUX SWITZERLAND
DRAW BY: JC DATE: 04-04-93	DIGITAL TAPE RECORDER NAGRA D	
CHECK BY: DATE:	REEL MOTOR SWITCHING SCHEMATIC	
	A13 0910265000	REV A
	RELEASE: 04-04-93 SCALE: ~	SHEET: 1/1

This drawing is confidential and may not be divulged in whole or in part to a third party

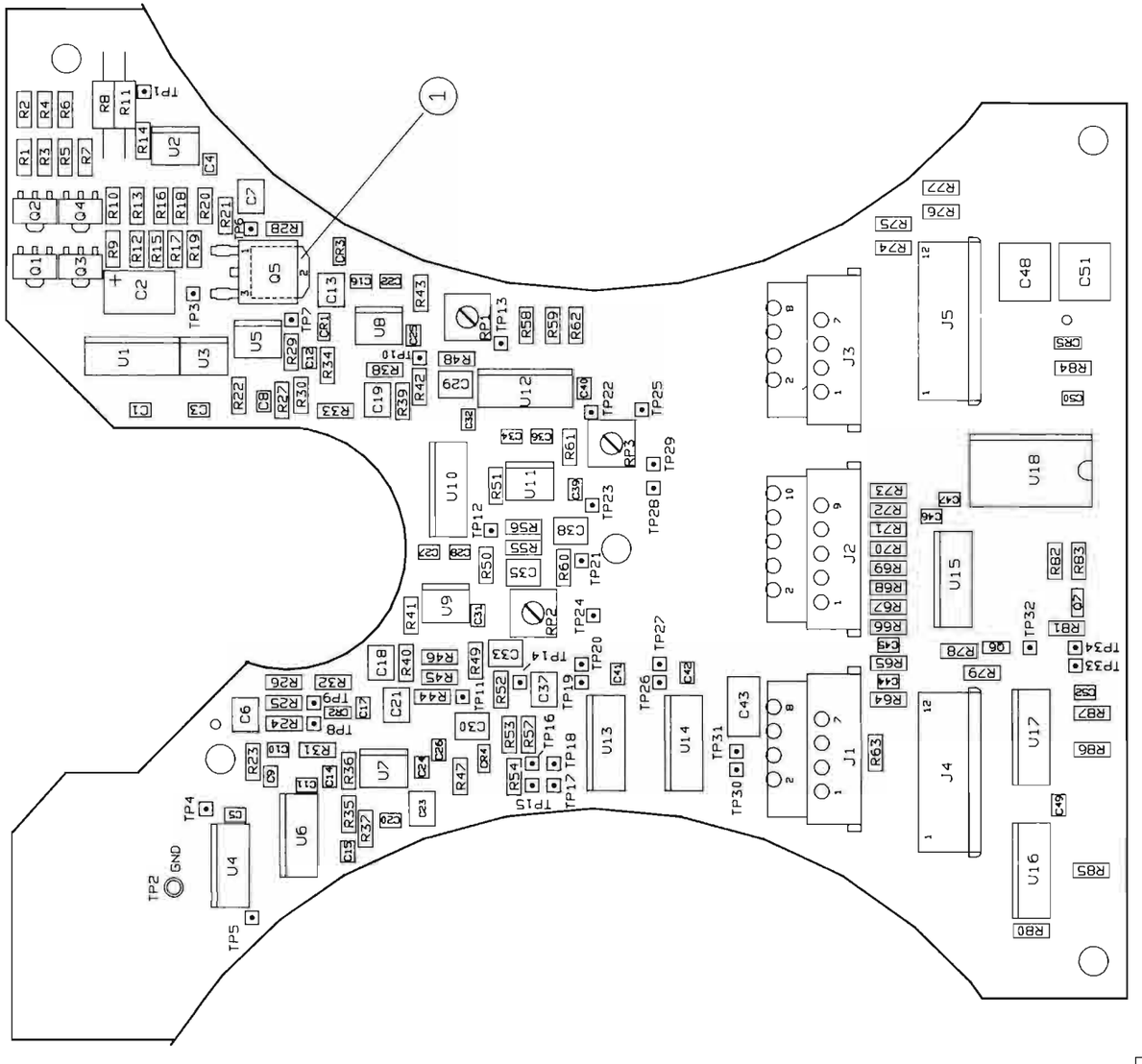

NOTE :

(1) METTRE UN SCOTCH (4289025413) SOUS Q5 POUR ISOLER LA PISTE
ET LE TRANSFERT DU COLLECTEUR DE Q5 (PARTIE ARRIERE METAL.)

WARNING: HANDLE ONLY AT STATIC SAFE WORK STATION
ATTENTION: MANIPULATION UNIQUEMENT AUTORISEE SUR POSTE DE TRAVAIL PROTEGE
ACHTUNG: HANDHABUNG DAHER NUR AN GESCHÜTZTEN ARBEITSPLÄTZEN ERLAUBT

NAGRA	AUDIO DIVISION	KUDELSKI SA CH-1033 CHESEAUX SWITZERLAND
DRAW BY: GA DATE: 04-04-93	DIGITAL TAPE RECORDER NAGRA D REEL MOTOR SERVO	
CHECK BY: DATE:	PRINTED-WIRING ASSEMBLY	
	A14 9110255000 REV A	
	RELEASE: 04-04-93 SCALE: ~	SHEET: 1 / 1

This drawing is confidential and may not be divulged in whole or in part to a third party

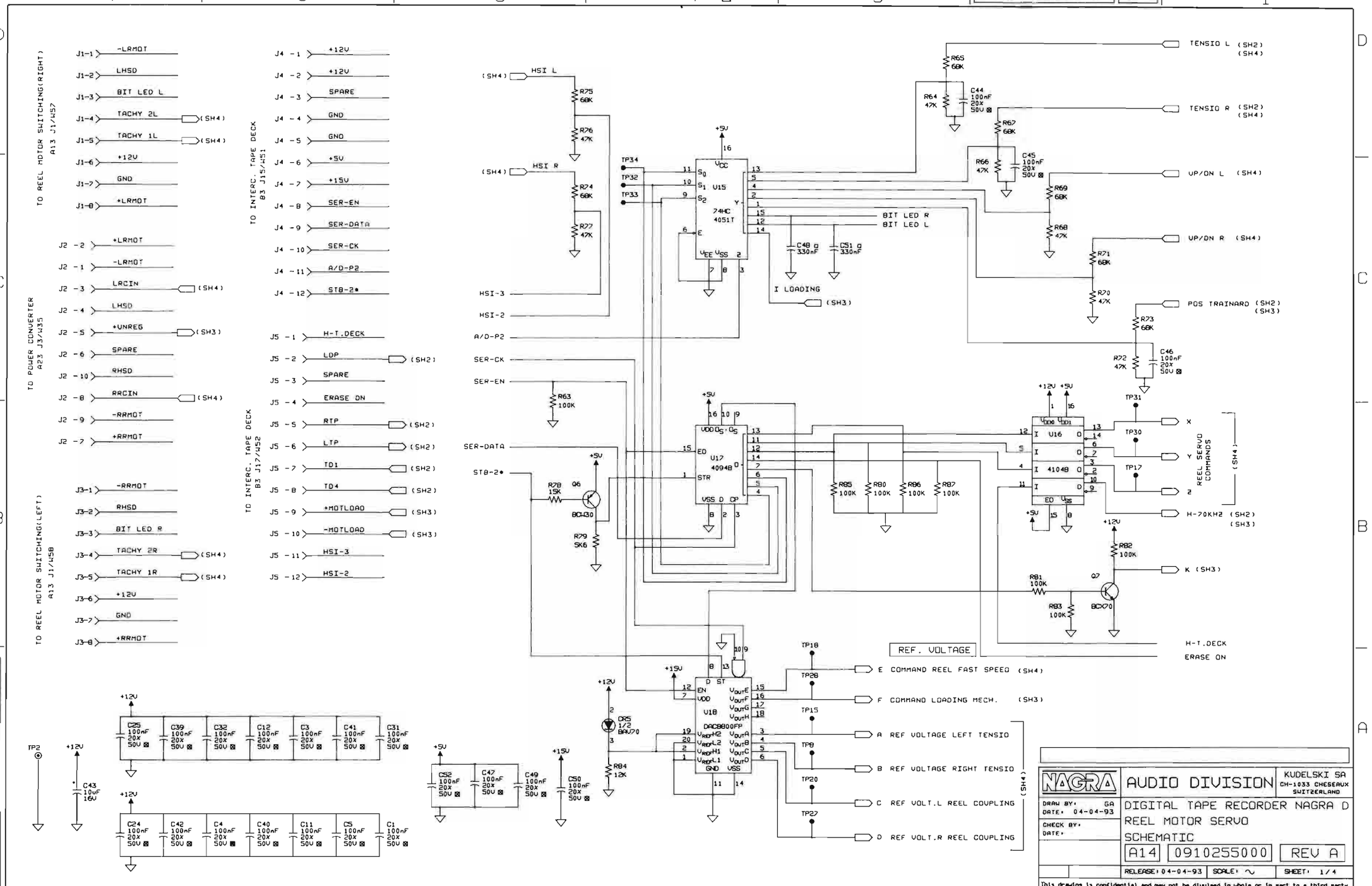

NAGRA

NAGRA AUDIO DIVISION	KUDELSKI SA CH-1033 CHESEAUX SWITZERLAND	
DRAW BY: GA DATE: 04-04-93	DIGITAL TAPE RECORDER NAGRA D REEL MOTOR SERVO SCHEMATIC	
CHECK BY: DATE:	A14	0910255000	REV A
	RELEASE: 04-04-93	SCALE: ~	SHEET: 1/4

This drawing is confidential and may not be divulged in whole or in part to a third party

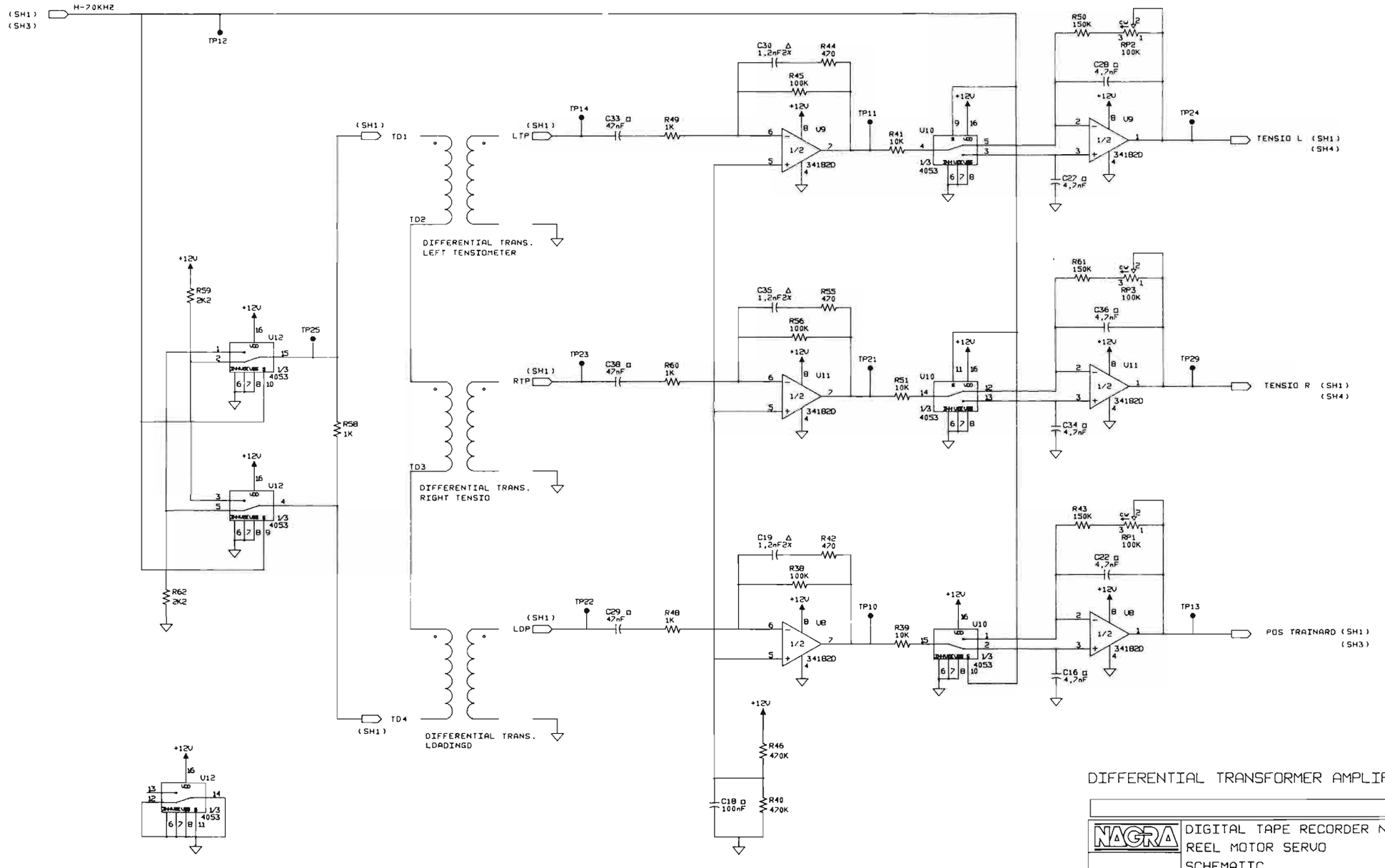

DIFFERENTIAL TRANSFORMER AMPLIFYING

NAGRA	DIGITAL TAPE RECORDER NAGRA D REEL MOTOR SERVO SCHEMATIC	
	A14	0910255000	REV A
	RELEASE: 04-04-93	SCALE: ~	SHEET: 2/4

This drawing is confidential and may not be divulged in whole or in part to a third party

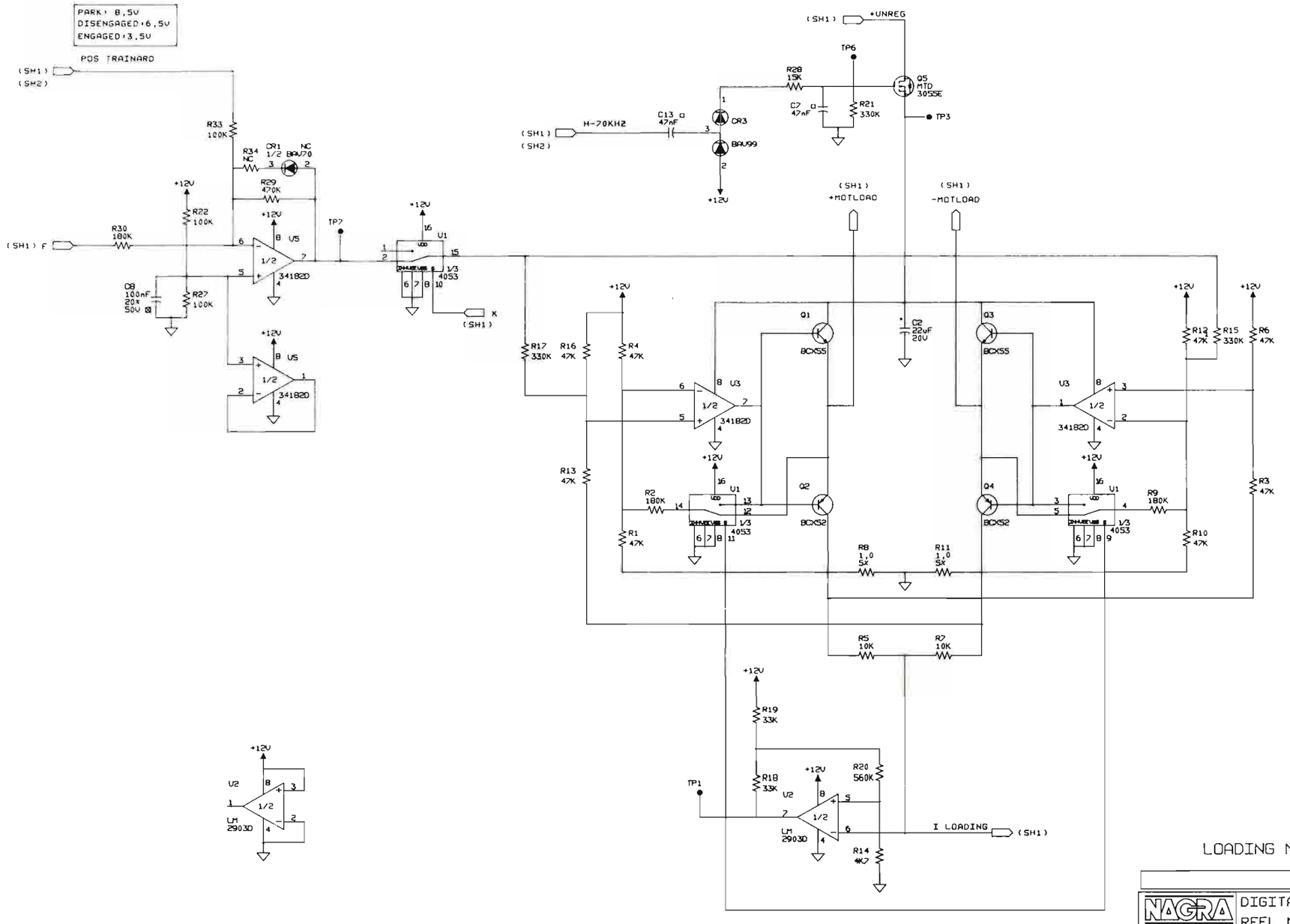

LOADING MECHANISM SERVO

NAGRA

DIGITAL TAPE RECORDER NAGRA D
REEL MOTOR SERVO
SCHEMATIC

A14	0910255000	REV A
RELEASE: 04-04-93	SCALE: ~	SHEET: 3/4

This drawing is confidential and may not be divulged in whole or in part to a third party

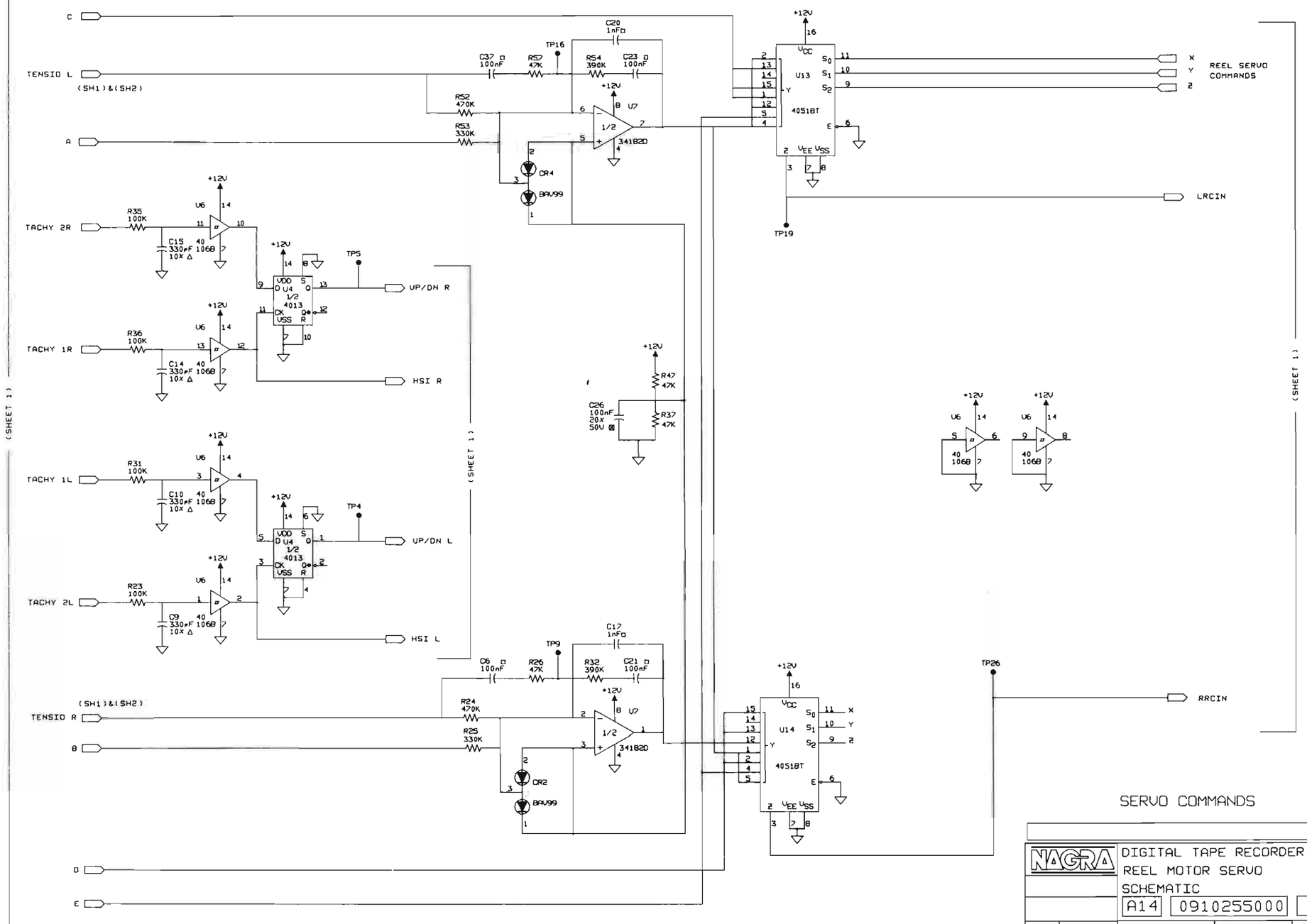

SERVO COMMANDS

NAGRA

DIGITAL TAPE RECORDER NAGRA D
REEL MOTOR SERVO
SCHEMATIC

A14	0910255000	REV A
RELEASE: 04-04-93	SCALE: ~	SHEET: 4/4

This drawing is confidential and may not be divulged in whole or in part to a third party

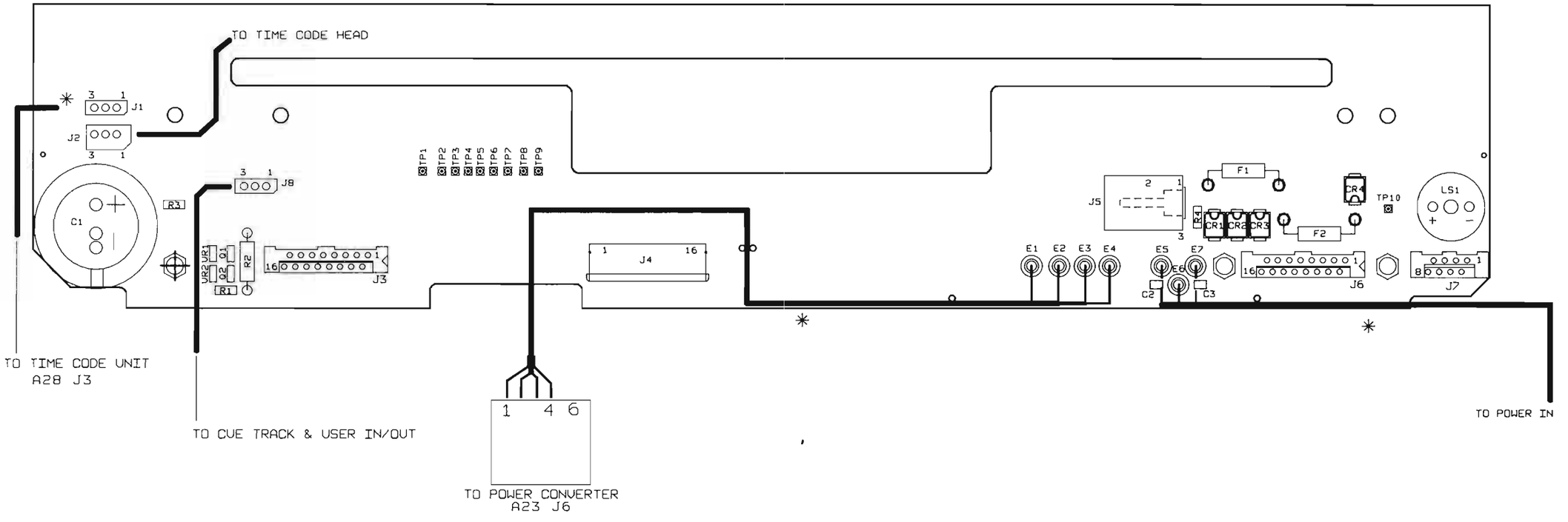

* WIRING 8110000521

WARNING: HANDLE ONLY AT STATIC SAFE WORK STATION
ATTENTION: MANIPULATION UNIQUEMENT AUTORISEE SUR POSTE DE TRAVAIL PROTEGE
ACHTUNG: HANDHABUNG DAHER NUR AN GESCHÜTZTEN ARBEITSPLÄTZEN ERLAUBT

NAGRA	AUDIO DIVISION	KUDELSKI SA CH-1033 CHESEAUX SWITZERLAND
DRAW BY: GA DATE: 04-04-93	DIGITAL TAPE RECORDER NAGRA D	
CHECK BY: DATE:	POWER INPUT & PROTECTION	
	PRINTED-WIRING ASSEMBLY	
	A15 9110330100 REV A	
	RELEASE: 04-04-93 SCALE: ~	SHEET: 1/1

This drawing is confidential and may not be divulged in whole or in part to a third party

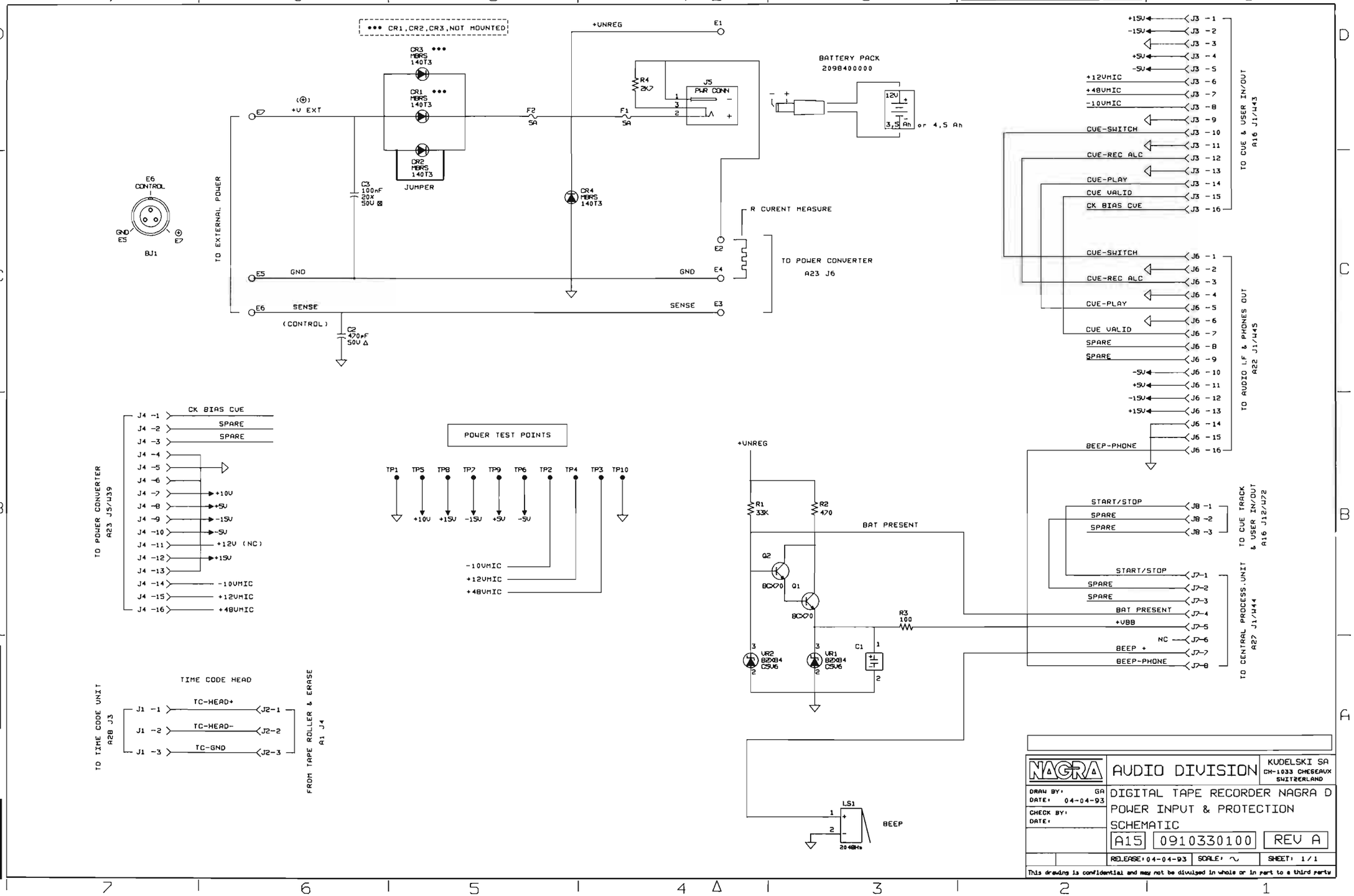
*** CR1,CR2,CR3,NOT MOUNTED
CR3 MBRS 140T3
CR1 MBRS 140T3
CR2 MBRS 140T3
JUMPER
(⊕) +V EXT
E7
F2 5A
F1 5A
+UNREG
E1
R4 2K7
J5 PWR CONN
BATTERY PACK 2098400000
12V 3,5 Ah or 4,5 Ah
C3 100nF 20% 50V
CR4 MBRS 140T3
E6 CONTROL
GND E5
E7
BJ1
TO EXTERNAL POWER
E5 GND
GND E4
E6 SENSE
SENSE E3
(CONTROL)
C2 470nF 50V
R CURENT MEASURE
E2
TO POWER CONVERTER A23 J6
+15V J3 -1
-15V J3 -2
J3 -3
+5V J3 -4
-5V J3 -5
+12VMIC J3 -6
+48VMIC J3 -7
-10VMIC J3 -8
J3 -9
CVE-SWITCH J3 -10
J3 -11
CVE-REC ALC J3 -12
J3 -13
CVE-PLAY J3 -14
CVE VALID J3 -15
CK BIAS CVE J3 -16
TO CVE & USER IN/OUT A16 J1/W43
CVE-SWITCH J6 -1
J6 -2
CVE-REC ALC J6 -3
J6 -4
CVE-PLAY J6 -5
J6 -6
CVE VALID J6 -7
SPARE J6 -8
SPARE J6 -9
-5V J6 -10
+5V J6 -11
-15V J6 -12
+15V J6 -13
J6 -14
J6 -15
BEEP-PHONE J6 -16
TO AUDIO LF & PHONES OUT A22 J1/W45
J4 -1 CK BIAS CVE
J4 -2 SPARE
J4 -3 SPARE
J4 -4
J4 -5
J4 -6
J4 -7 +10V
J4 -8 +5V
J4 -9 -15V
J4 -10 -5V
J4 -11 +12V (NC)
J4 -12 +15V
J4 -13
J4 -14 -10VMIC
J4 -15 +12VMIC
J4 -16 +48VMIC
TO POWER CONVERTER A23 J5/W39
POWER TEST POINTS
TP1 TP5 TP8 TP7 TP9 TP6 TP2 TP4 TP3 TP10
+10V +15V -15V +5V -5V
-10VMIC
+12VMIC
+48VMIC
+UNREG
R1 33K
R2 470
BAT PRESENT
Q2 BC70
Q1 BC70
R3 100
C1
VR2 BZX84 C5V6
VR1 BZX84 C5V6
START/STOP J8 -1
SPARE J8 -2
SPARE J8 -3
TO CUE TRACK & USER IN/OUT A16 J12/W72
START/STOP J7-1
SPARE J7-2
SPARE J7-3
BAT PRESENT J7-4
+VBB J7-5
NC J7-6
BEEP + J7-7
BEEP-PHONE J7-8
TO CENTRAL PROCESS.UNIT A27 J1/W44
TIME CODE HEAD
J1 -1 TC-HEAD+ J2-1
J1 -2 TC-HEAD- J2-2
J1 -3 TC-GND J2-3
TO TIME CODE UNIT A28 J3
FROM TAPE ROLLER & ERASE A1 J4
LS1
BEEP
2048Hz
NAGRA
AUDIO DIVISION
KUDELSKI SA CH-1033 CHESEAUX SWITZERLAND
DRAW BY: GA
DATE: 04-04-93
CHECK BY:
DATE:
DIGITAL TAPE RECORDER NAGRA D
POWER INPUT & PROTECTION
SCHEMATIC
A15 0910330100 REV A
RELEASE: 04-04-93 SCALE: ~ SHEET: 1/1
This drawing is confidential and may not be divulged in whole or in part to a third party

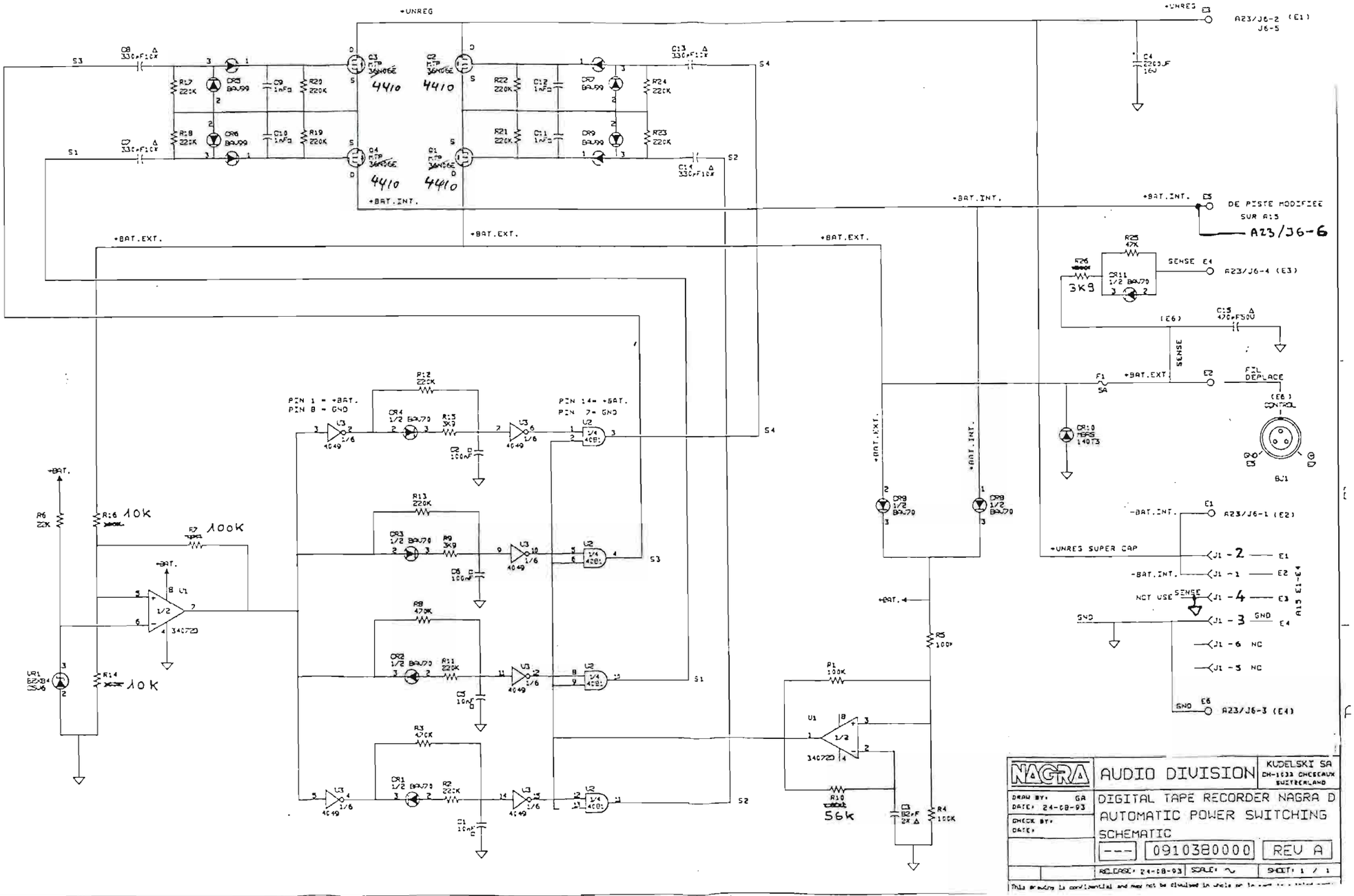

NAGRA AUDIO DIVISION KUDELSKI SA CH-1033 CHESEAUX SUITZERLAND

DRAW BY: GA
DATE: 24-08-93
CHECK BY:
DATE:

DIGITAL TAPE RECORDER NAGRA D
AUTOMATIC POWER SWITCHING
SCHEMATIC

--- 0910380000 REV A

RELEASE: 24-08-93 SCALE: ~ SHEET: 1 / 1

This drawing is confidential and may not be divulged in whole or in part to a third party.

7010230000

A15 (10330)
POWER INPUT & PROTECT

* REMOVE THE WIRING (CONNECTOR & WIRES) AND PLACE IT ON J1 OF CCA 9110380000

CUT THE TRACK AS INDICATED

SOLDER THIS WIRE E5 ON COPPER LAND

J5 E1 E4 E5 E6 E7

PUT THE NEW CONNECTOR ON A23/J6

+BATT.(INTERNAL)

REMOVE (E6) WIRE AND RESOLDER IT ON CCA 9110380000 /E2

CABLE TO BE ADDED SEE TIE 10-22 OR (OME 10-218)

A23/J6 1 6

THIS MODIFICATION REQUIRES A MODIFICATION TO THE DC/DC CONVERTER CIRCUIT A23 * 9110364000

LINK R140 TO PIN 6 OF J6 (USING A SMALL LENTH OF WIRE

J6 6 5 4 3 2 1

J5 16 1

CCA: POWER CONVERTER (TOP FACE)
A23 9110364000

CUT THE TRACK AS INDICATED

R140 R143

J4 1 2 9 10

9110380000

R1 R2 R3 C1 U1 U2 U3 R4 R5 R6 R7 R8 CR1 CR2 CR3 C2 R9 R10 R11 R12 R13 C3 R14 C5 R15 C6 VR1 CR4 R16 Q1 Q2 Q3 Q4 C4 C8 R17 R18 R19 C9 CR5 CR6 R20 C10 C13 C14 R21 R22 R23 R24 CR8 C11 C12 CR7 J1 CR9 CR10 CR11 R25 R26 F1 C15 E1 E2 E3 E4 E5 E6

WIRE (E5) TO A15

WIRE (E2) FROM BJ1 (CONTROL)

TIE 10-22 (OME 10-218) CABLE TO BE ADDED

+BATT. TO A23/J6 POWER CONVERTER

FROM A15 POWER INPUT & PROTECT.

CONTROL GND

MAINS POWER CONNECTOR (BJ1)

!!ATTENTION!!
IF YOU CONNECT THE CABLE 7010231000 CHECK: L.MAX.= 800mm

* PUT THIS CONNECTOR ON J1

WARNING

RED STICKER 0110230004
GLUE THE RED STICKER BESIDE THE EXTERNAL POWER CONNECTOR

INSTALL THE AP CIRCUIT TO GLUE THE ADDITIONAL METAL SPACER IF IS NOT YET. CLEAN BOTH SURFACES GLUE THE SPACER AND PUT BACK ON THE AP PCB. FIXE THE PCB ONLY WIT THE TWO FRONT NUTS AND LET DRY

0110380003

NOT USED

0110001006

AP PCB

FLAT CABLE W45

W45

INSULATOR

SCOTCH

TWO FRONT NUTS

INSULATOR 0110380002

THE INSULATOR IS FIHED WITH ONE SMALL PART DOUBLE FACE SCOTCH BETWEEN THE TWO FRONT SPACER.
AT BACK, THE INSULATOR MUST BE PASSED BETWEEN THE AP PCB AND THE FLAT CABLE W45.

E1(-BAT.INT.) → A23/J6-1
E2(+BAT.EXT.) → FROM BJ1(CONTROL)
E3(+UNREG) → A23/J6-2
E4(SENSE) → A23/J6-4
E5(+BAT.INT.) → TO A15(AREA MODIF)
E6(GND) → A23/J6-3
(TIE 10-22) OR (OME 10 218) — E5(+BAT.INT.) → TO J6 PIN 6

NOTE:
COUPER (MAX.1mm) TOUTES LES PATTES + FILS QUI DEPASSENT DU COTE OPPOSE AUX COMPOSANTS

WARNING: HANDLE ONLY AT STATIC SAFE WORK STATION
ATTENTION: MANIPULATION UNIQUEMENT AUTORISEE SUR POSTE DE TRAVAIL PROTEGE
ACHTUNG: HANDHABUNG DAHER NUR AN GESCHÜTZTEN ARBEITSPLÄTZEN ERLAUBT

NAGRA	AUDIO DIVISION	KUDELSKI S. CH-1033 CHESEA SWITZERLAND
DRAW BY: SA DATE: 15-02-95	DIGITAL TAPE RECORDER NAGRA AUTOMATIC POWER SWITCHING PRINTED-WIRING ASSEMBLY	
CHECK BY: DATE:	--- 7010230000	
	RELEASE: 15-02-95 SCALE: ~	SHEET: 1 / 1

This drawing is confidential and may not be disclosed to ...

5

June 1994

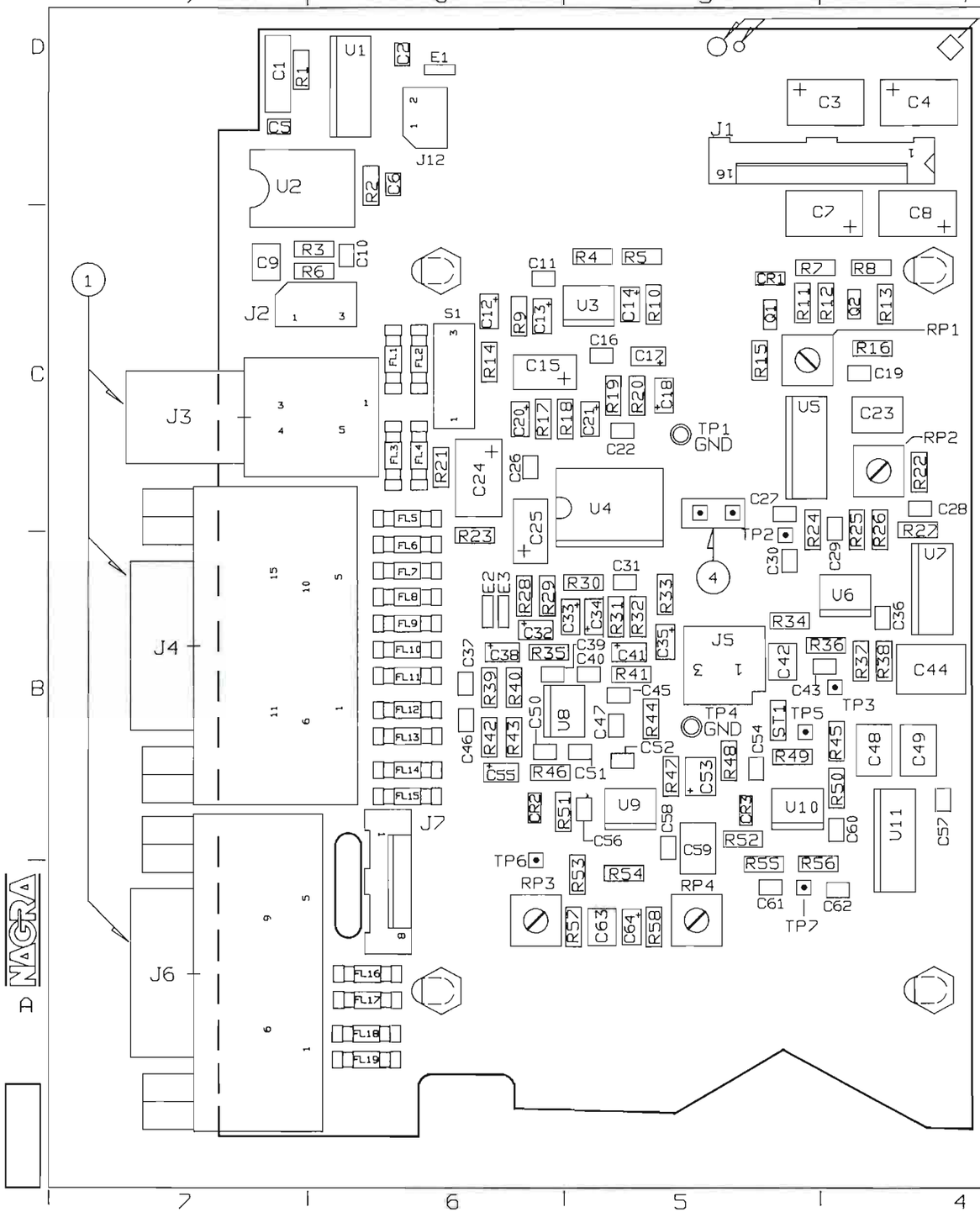

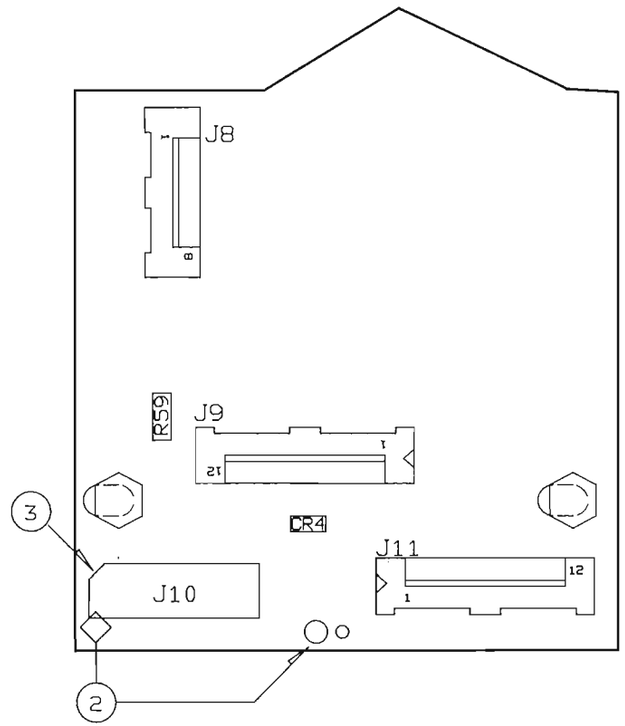

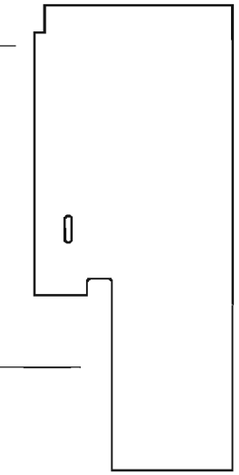

NOTES:

MONTAGE & CABLAGE SUIVANT GAMME OPERATOIRE N:9110324200

1. SOUDER LES PRISES J3,J4,J6 AU GABARIT
2. MIRES OPTIQUE & GOUPILLES DE POSITION DES COMPOSANTS
3. NE PAS MONTER J10
4. ATTACHES DU CABLE TETE CUE
   SOUDER FILS 4210201006

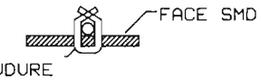

WARNING: HANDLE ONLY AT STATIC SAFE WORK STATION
ATTENTION: MANIPULATION UNIQUEMENT AUTORISEE SUR POSTE DE TRAVAIL PROTEGE
ACHTUNG: HANDHABUNG DAHER NUR AN GESCHÜTZTEN ARBEITSPLÄTZEN ERLAUBT

NAGRA	AUDIO DIVISION	KUDELSKI SA CH-1033 CHESEAUX SWITZERLAND
DRAW BY: JC DATE: 04-04-93	DIGITAL TAPE RECORDER NAGRA D	
CHECK BY: DATE:	CUE TRACK & USER IN/OUT	
	PRINTED-WIRING ASSEMBLY	
	A16 9110324200	REV A
	RELEASE: 04-04-93 SCALE: ~	SHEET: 1 / 1

This drawing is confidential and may not be divulged in whole or in part to a third party

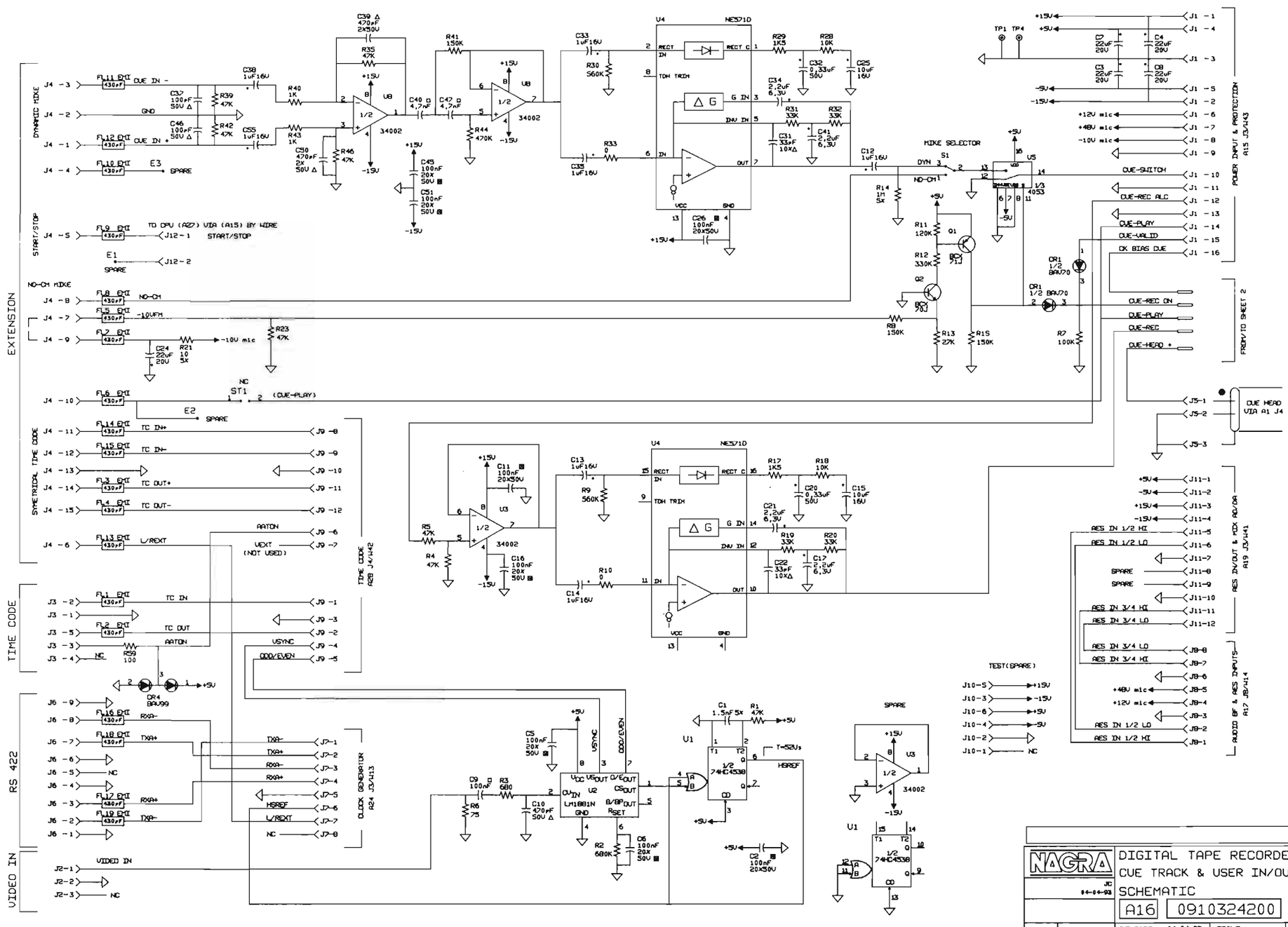

NAGRA

DIGITAL TAPE RECORDER NAGRA D
CUE TRACK & USER IN/OUT
SCHEMATIC

JC 04-04-93

A16 | 0910324200 | REV A

RELEASE: 04-04-93 | SCALE: ~ | SHEET: 1 / 2

This drawing is confidential and may not be divulged in whole or in part to a third party

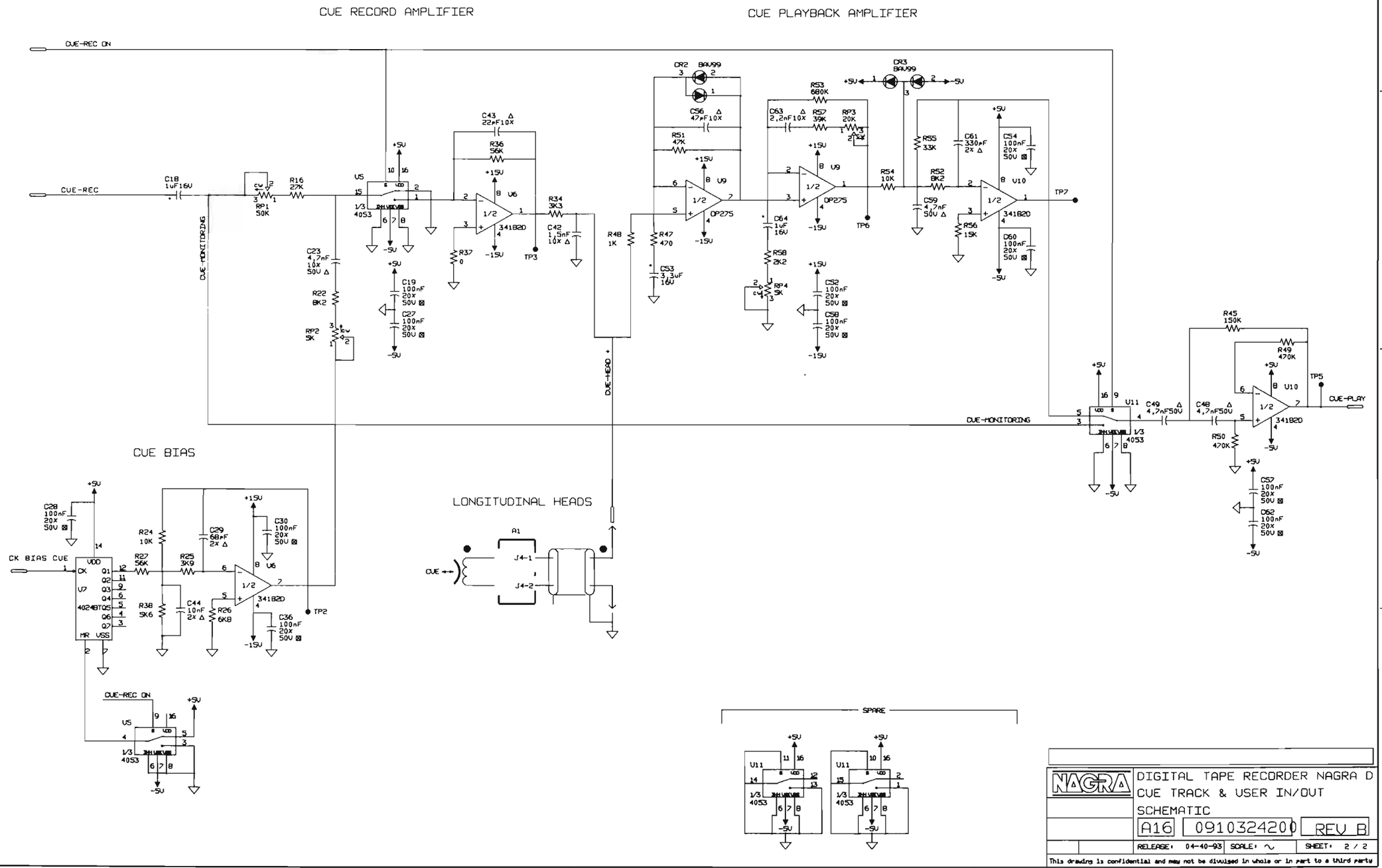

NAGRA

DIGITAL TAPE RECORDER NAGRA D
CUE TRACK & USER IN/OUT
SCHEMATIC

A16	0910324200	REV B
RELEASE: 04-40-93	SCALE: ~	SHEET: 2 / 2

This drawing is confidential and may not be divulged in whole or in part to a third party

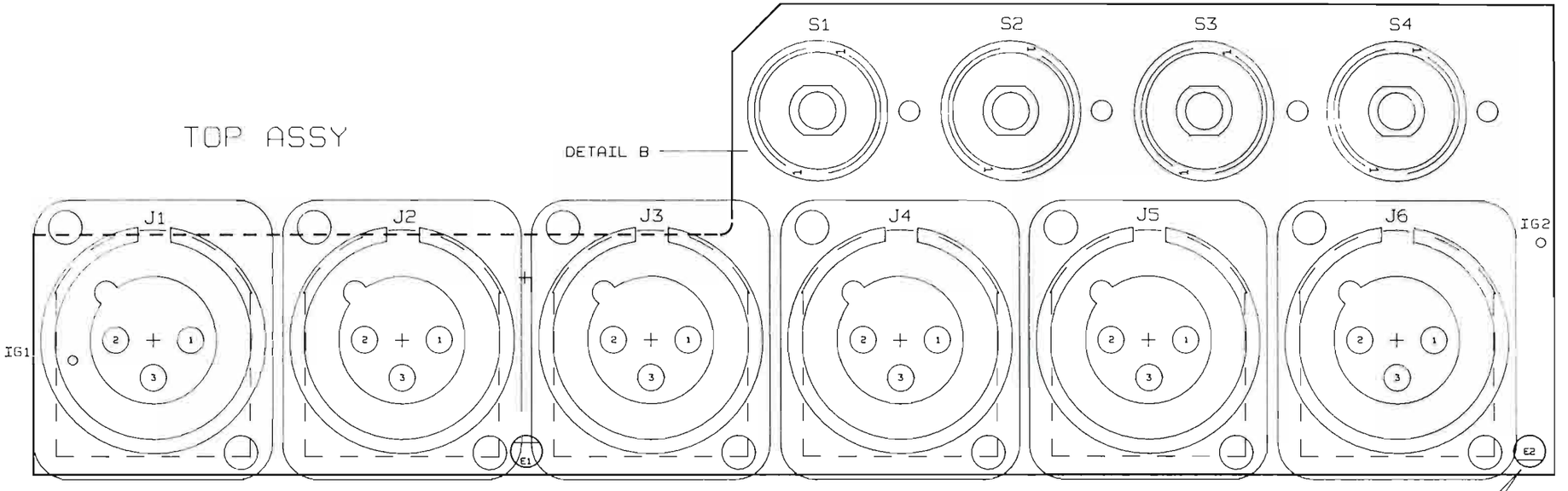

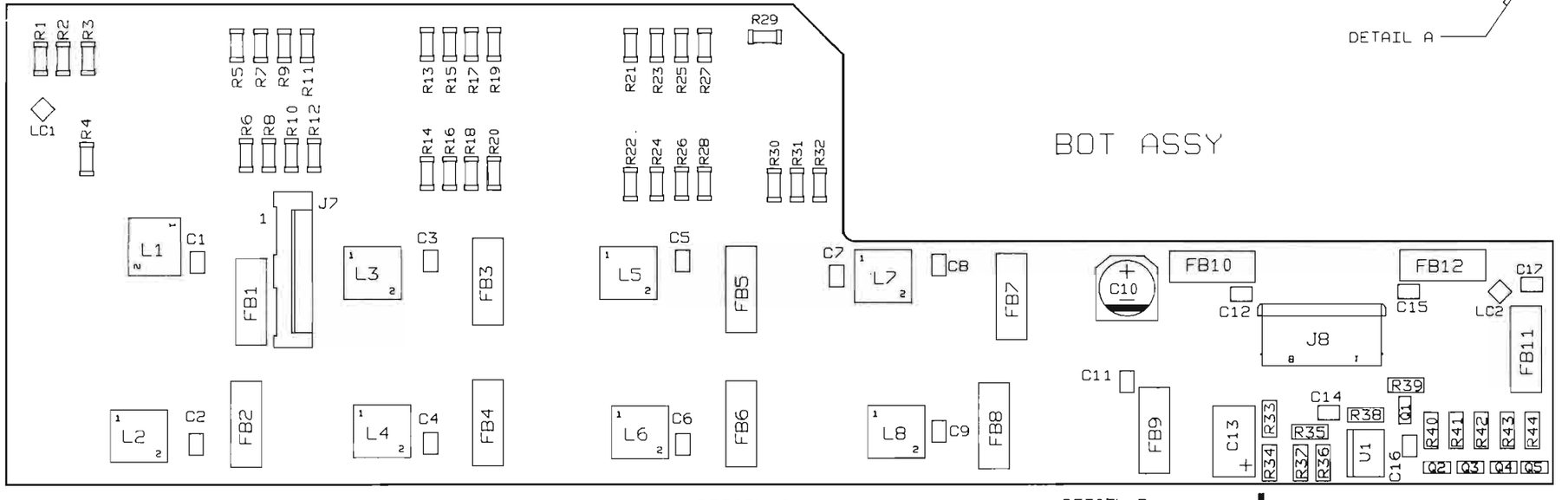

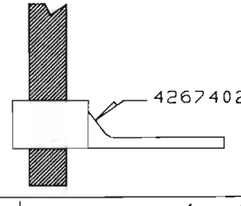

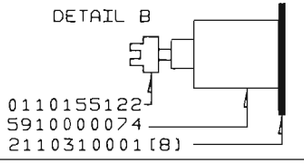

WARNING: HANDLE ONLY AT STATIC SAFE WORK STATION
ATTENTION: MANIPULATION UNIQUEMENT AUTORISEE SUR POSTE DE TRAVAIL PROTEGE
ACHTUNG: HANDHABUNG DAHER NUR AN GESCHÜTZTEN ARBEITSPLÄTZEN ERLAUBT

NAGRA	AUDIO DIVISION	KUDELSKI SA CH-1033 CHESEAUX SWITZERLAND
DRAW BY: JC DATE: 04-04-93	DIGITAL TAPE RECORDER NAGRA D	
CHECK BY: DATE:	AUDIO BF & AES INPUTS	
	PRINTED-WIRING ASSEMBLY	
	A17 9110310100	REV A
	RELEASE: 04-04-93 SCALE: ~	SHEET: 1/1

This drawing is confidential and may not be divulged in whole or in part to a third party

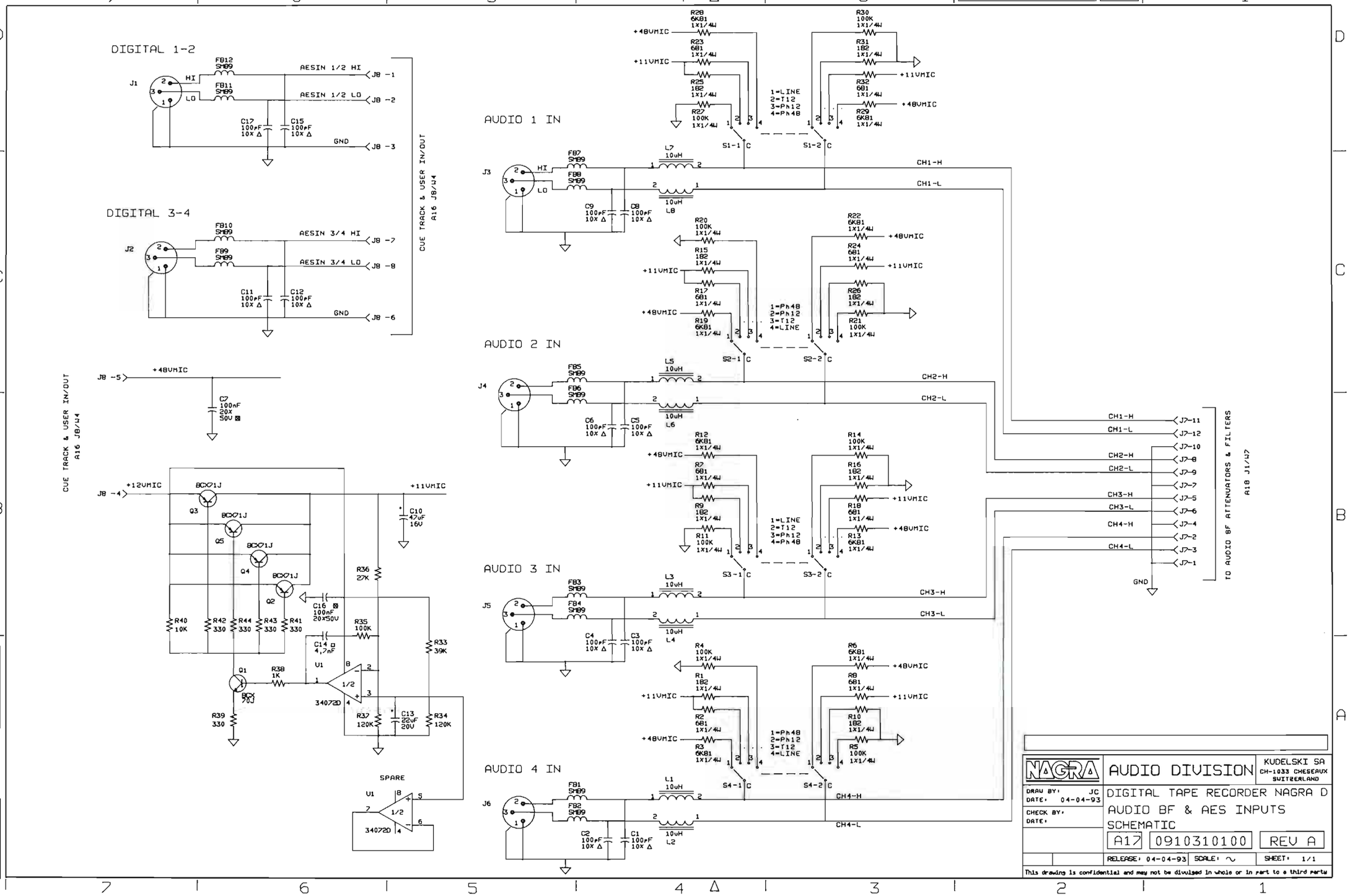
0910310100(A) 1/1
DIGITAL 1-2
DIGITAL 3-4
AUDIO 1 IN
AUDIO 2 IN
AUDIO 3 IN
AUDIO 4 IN
AESIN 1/2 HI
AESIN 1/2 LO
AESIN 3/4 HI
AESIN 3/4 LO
CUE TRACK & USER IN/OUT A16 J8/W4
TO AUDIO BF ATTENUATORS & FILTERS A18 J1/W7
SPARE
1=LINE 2=T12 3=Ph12 4=Ph48
1=Ph48 2=Ph12 3=T12 4=LINE
NAGRA
AUDIO DIVISION
KUDELSKI SA
CH-1033 CHESEAUX SWITZERLAND
DRAW BY: JC
DATE: 04-04-93
CHECK BY:
DATE:
DIGITAL TAPE RECORDER NAGRA D
AUDIO BF & AES INPUTS
SCHEMATIC
A17 0910310100 REV A
RELEASE: 04-04-93 SCALE: ~ SHEET: 1/1
This drawing is confidential and may not be divulged in whole or in part to a third party

9110310200[A]

COMPOSANTS MONTES COTE OPPOSE AUX SMD

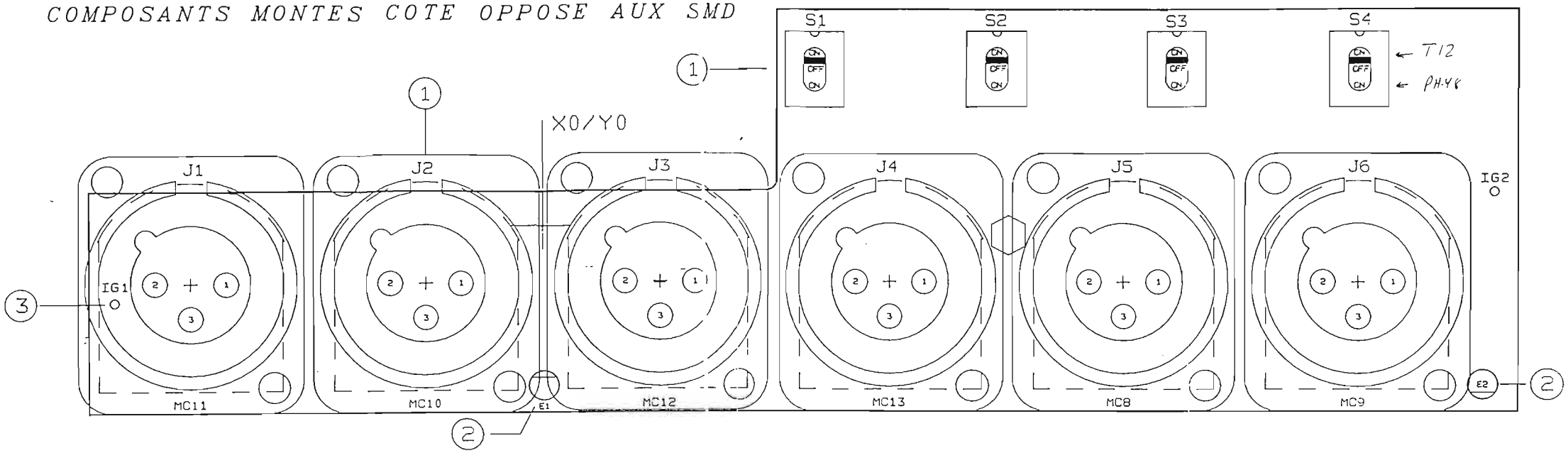

COMPOSANTS SMD MONTES COTE SERIGRAPHIE

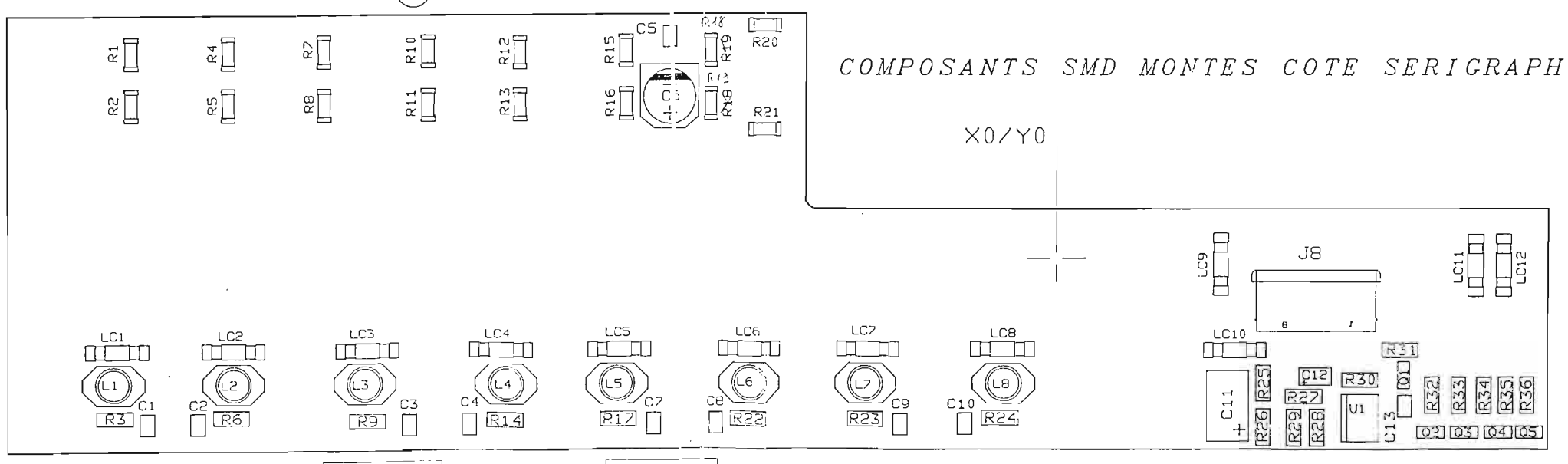

NOTES;

1- MONTER J1 à J6,S1 à S4 AU GABARIT
   ATTENTION A L'ALIGNEMENT DES PRISES
2- MONTER COSSES GND E1,E2 SUIVANT DETAIL A
3- BLINDAGE DES PRISES XLR SUIVANT DETAIL B
   MC8-MC13

DETAIL A

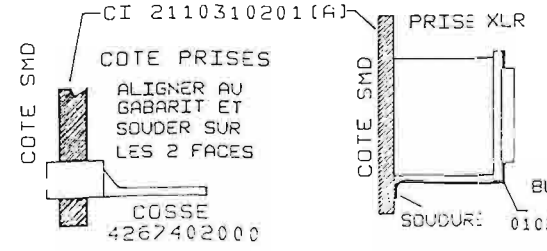

DETAIL B

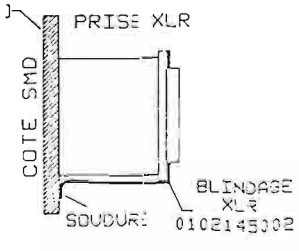

WARNING: HANDLE ONLY AT STATIC SAFE WORK STATION
ATTENTION: MANIPULATION UNIQUEMENT AUTORISEE SUR POSTE DE TRAVAIL PROTEGE
ACHTUNG: HANDHABUNG DAHER NUR AN GESCHÜTZTEN ARBEITSPLÄTZEN ERLAUBT

NAGRA	AUDIO DIVISION	KUDELSKI SA CH-1133 CHESEAUX SWITZERLAND
DRAW BY: JC DATE: 03-04-92	DIGITAL TAPE RECORDER NAGRA D	
CHECK BY: DATE:	AUDIO BF & AES INPUTS	
	PRINTED-WIRING ASSEMBLY	
	A17 9110310200	REV A
	RELEASE: 11-11-96 SCALE: ~	SHEET: 1/1

This drawing is confidential and may not be divulged in whole or in part to a third party.

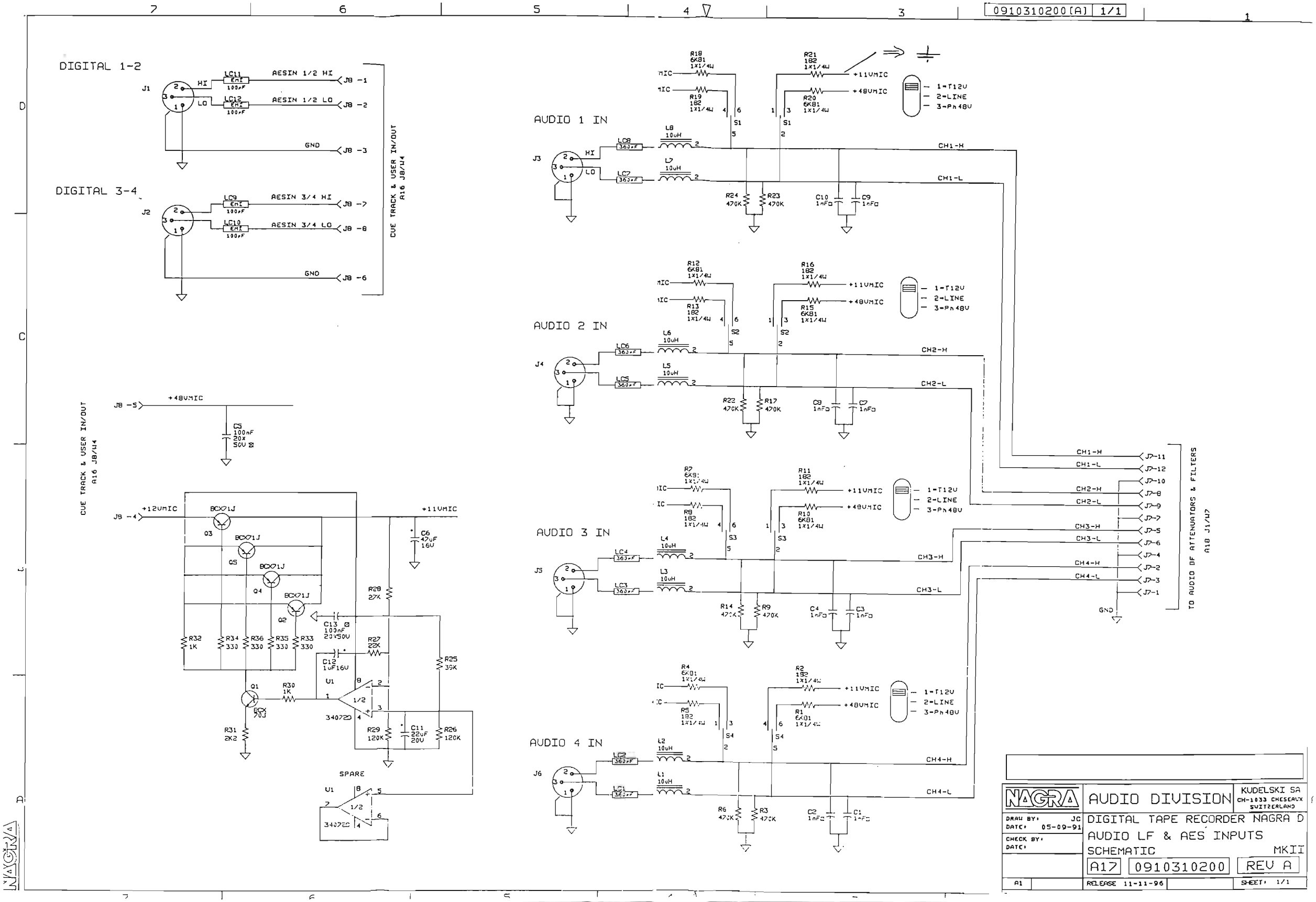
0910310200[A] 1/1
DIGITAL 1-2
J1
HI
LO
LC11 EMI 100pF
LC12 EMI 100pF
AESIN 1/2 HI
AESIN 1/2 LO
J8 -1
J8 -2
GND
J8 -3
DIGITAL 3-4
J2
LC9 EMI 100pF
LC10 EMI 100pF
AESIN 3/4 HI
AESIN 3/4 LO
J8 -7
J8 -8
GND
J8 -6
CUE TRACK & USER IN/OUT
A16 J8/U4
AUDIO 1 IN
J3
LC8 360pF
LC7 360pF
L8 10uH
L7 10uH
R18 6K81 1X1/4W
R19 182 1X1/4W
R21 182 1X1/4W
R20 6K81 1X1/4W
+11VMIC
+48VMIC
S1
1-T12V
2-LINE
3-Ph48V
R24 470K
R23 470K
C10 1nFo
C9 1nFo
CH1-H
CH1-L
AUDIO 2 IN
J4
LC6 360pF
LC5 360pF
L6 10uH
L5 10uH
R12 6K81 1X1/4W
R13 182 1X1/4W
R16 182 1X1/4W
R15 6K81 1X1/4W
S2
R22 470K
R17 470K
C8 1nFo
C7 1nFo
CH2-H
CH2-L
AUDIO 3 IN
J5
LC4 360pF
LC3 360pF
L4 10uH
L3 10uH
R7 6K81 1X1/4W
R8 182 1X1/4W
R11 182 1X1/4W
R10 6K81 1X1/4W
S3
R14 470K
R9 470K
C4 1nFo
C3 1nFo
CH3-H
CH3-L
AUDIO 4 IN
J6
LC2 360pF
LC1 360pF
L2 10uH
L1 10uH
R4 6K81 1X1/4W
R5 182 1X1/4W
R2 182 1X1/4W
R1 6K81 1X1/4W
S4
R6 470K
R3 470K
C2 1nFo
C1 1nFo
CH4-H
CH4-L
J8 -5
+48VMIC
C5 100nF 20% 50V
J8 -4
+12VMIC
BCX71J
Q3
Q5
Q4
Q2
+11VMIC
C6 47uF 16V
R28 27K
C13 100nF 20%50V
R27 22K
C12 1uF16V
R32 1K
R34 330
R36 330
R35 330
R33 330
R25 39K
Q1
BCX 70J
R30 1K
U1
1/2
34072D
R31 2K2
R29 120K
C11 22uF 20V
R26 120K
SPARE
J7-11
J7-12
J7-10
J7-8
J7-9
J7-7
J7-5
J7-6
J7-4
J7-2
J7-3
J7-1
GND
TO AUDIO BF ATTENUATORS & FILTERS
A18 J1/U7
NAGRA
AUDIO DIVISION
KUDELSKI SA
CH-1033 CHESEAUX
SWITZERLAND
DRAW BY: JC
DATE: 05-09-91
CHECK BY:
DATE:
DIGITAL TAPE RECORDER NAGRA D
AUDIO LF & AES INPUTS
SCHEMATIC
MKII
A17
0910310200
REV A
A1
RELEASE 11-11-96
SHEET: 1/1

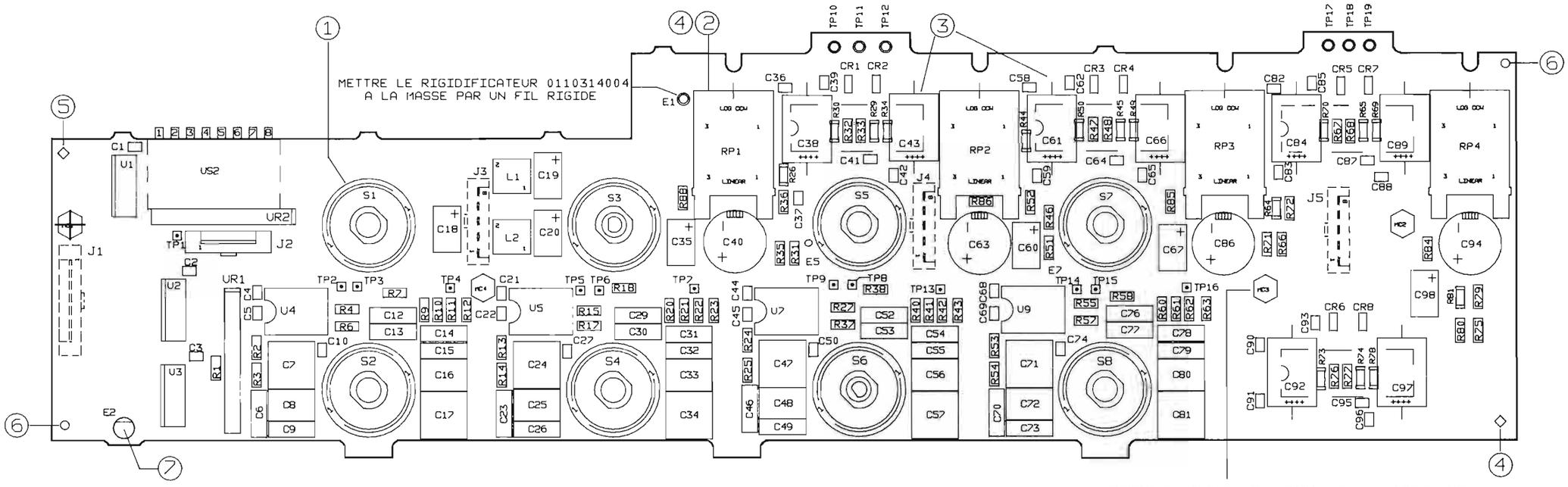

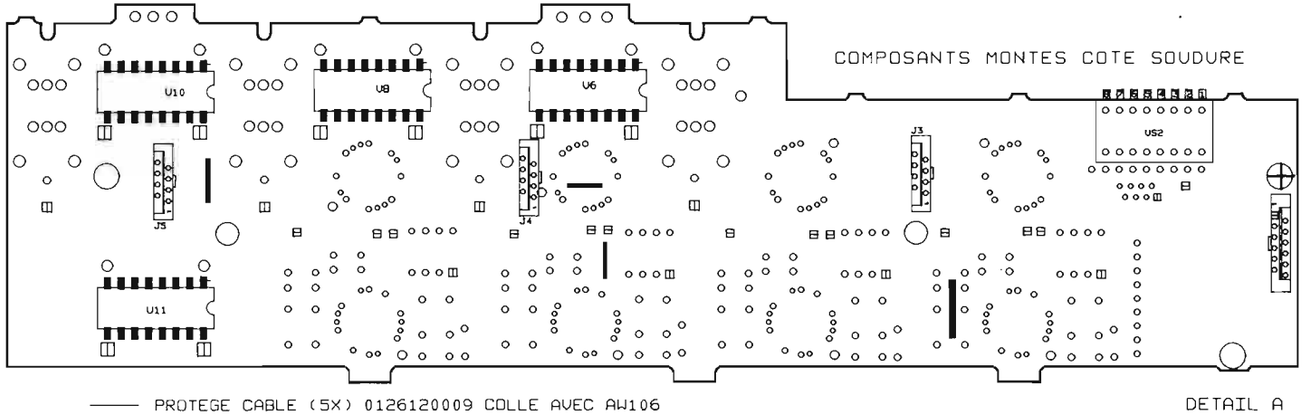

PROTEGE CABLE (5X) 0126120009 COLLE AVEC AW106

DETAIL BOUTONS
MONTES AU FINAL

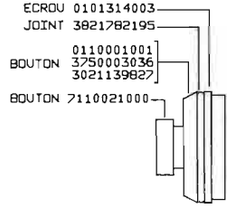

DETAIL B
MONTAGE POTENTIOMETRE
RP1 à RP4

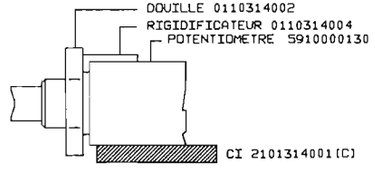

DETAIL A
E9 COSSE DE MASSE

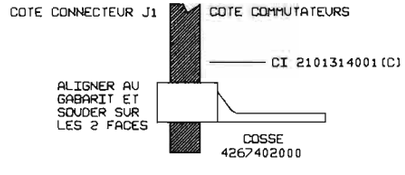

NOTES: VOIR GAMME OPERATOIRE DU CIRCUIT 9110314100[A]

1 LES COMPOSANTS S1 à S8 SONT MONTES AU GABARIT (N°)
2 LES COMPOSANTS RP1 à RP4 SONT MONTES AU GABARIT (N°)
(VOIR PLAN DE POSITION 9110314000[B]2/2)
3 LES CONDENSATEURS C38,C43,C61,C66,C84,C89,C92,C97
SONT SOUDES A 1 mm DU CIRCUIT IMPRIME
4 MONTER LE RIGIDIFICATEUR SELON DETAIL B
5 MIRES OPTIQUES DE POSITION DES COMPOSANTS
6 GOUPILLES DE POSAGE
7 MONTER COSSE GND E2 SUIVANT DETAIL A

SOUDER EN 3 PHASES
1 SMD LAYER 1 (PHASE VAPEUR)
2 COMPOSANTS TRAVERSANTS (VAGUE)
3 COMPOSANTS MONTES LAYER 4

WARNING: HANDLE ONLY AT STATIC SAFE WORK STATION
ATTENTION: MANIPULATION UNIQUEMENT AUTORISEE SUR POSTE DE TRAVAIL PROTEGE
ACHTUNG: HANDHABUNG DAHER NUR AN GESCHÜTZTEN ARBEITSPLÄTZEN ERLAUBT

NAGRA	AUDIO DIVISION	KUDELSKI SA CH-1033 CHESEAUX SWITZERLAND
DRAW BY: JC DATE: 04-04-93	DIGITAL TAPE RECORDER NAGRA D	
CHECK BY: DATE:	AUDIO BF ATTENUATOR & FILTER PRINTED-WIRING ASSEMBLY	
	A18 9110314100	REV A
	RELEASE: 04-04-93 SCALE: ∿	SHEET: 1/1

This drawing is confidential and may not be divulged in whole or in part to a third party

AUDIO ATTENUATOR & FILTER CH 1

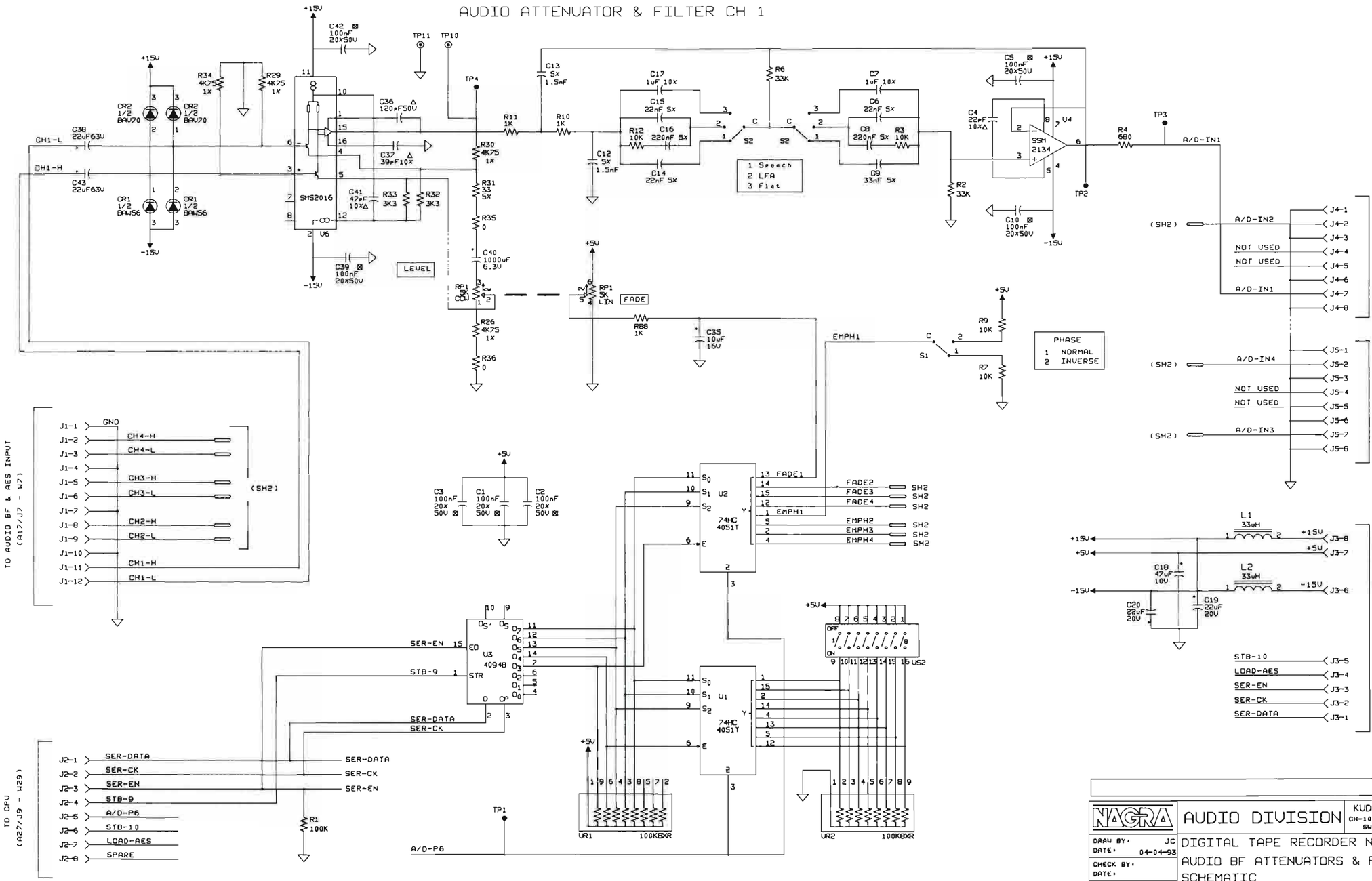

NAGRA	AUDIO DIVISION	KUDELSKI SA CH-1033 CHESEAUX SUITZERLAND
DRAW BY: JC DATE: 04-04-93	DIGITAL TAPE RECORDER NAGRA D AUDIO BF ATTENUATORS & FILTERS SCHEMATIC	
CHECK BY: DATE:	A18 0910314100	REV A
	RELEASE: 04-04-93 SCALE: ~	SHEET: 1/2

This drawing is confidential and may not be divulged in whole or in part to a third party

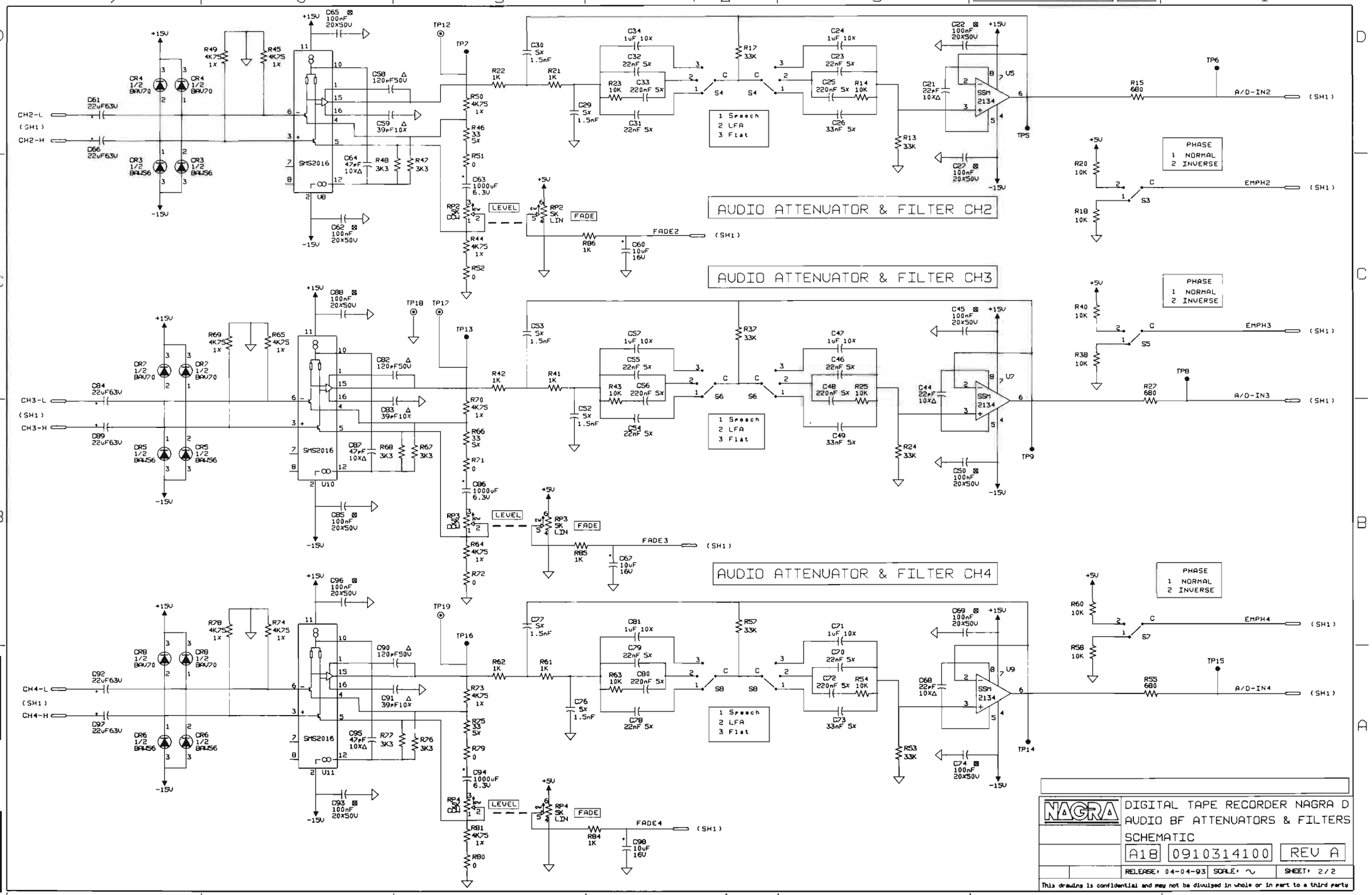

NAGRA

DIGITAL TAPE RECORDER NAGRA D
AUDIO BF ATTENUATORS & FILTERS
SCHEMATIC

A18	0910314100	REV A
RELEASE: 04-04-93	SCALE: ~	SHEET: 2/2

This drawing is confidential and may not be divulged in whole or in part to a third party

9110322000[A] 1/1

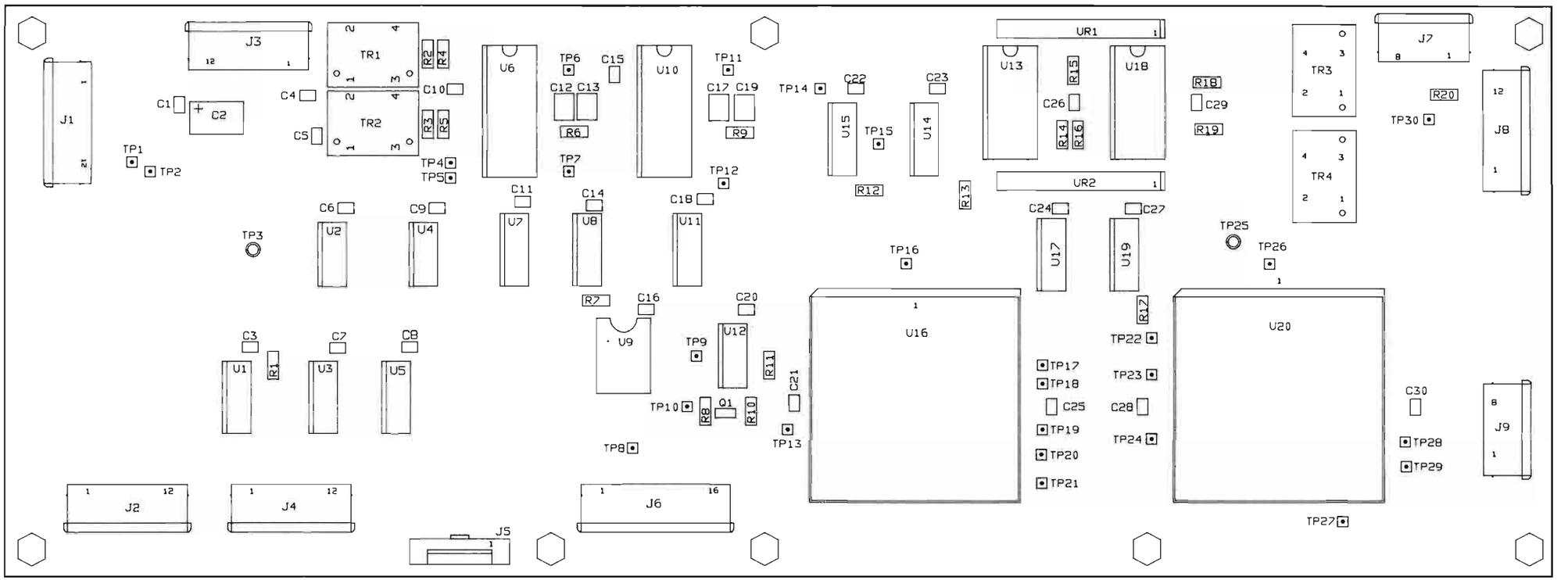

WARNING: HANDLE ONLY AT STATIC SAFE WORK STATION
ATTENTION: MANIPULATION UNIQUEMENT AUTORISEE SUR POSTE DE TRAVAIL PROTEGE
ACHTUNG: HANDHABUNG DAHER NUR AN GESCHÜTZTEN ARBEITSPLÄTZEN ERLAUBT

NAGRA

AUDIO DIVISION

KUDELSKI SA
CH-1033 CHESEAUX
SWITZERLAND

DRAW BY: JC
DATE: 04-04-93
CHECK BY:
DATE:

DIGITAL TAPE RECORDER NAGRA D
AES IN/OUT & A/D MIXER
PRINTED-WIRING ASSEMBLY

A19 | 9110322000 | REV A

RELEASE: 04-04-93 | SCALE: ~ | SHEET: 1/1

This drawing is confidential and may not be divulged in whole or in part to a third party

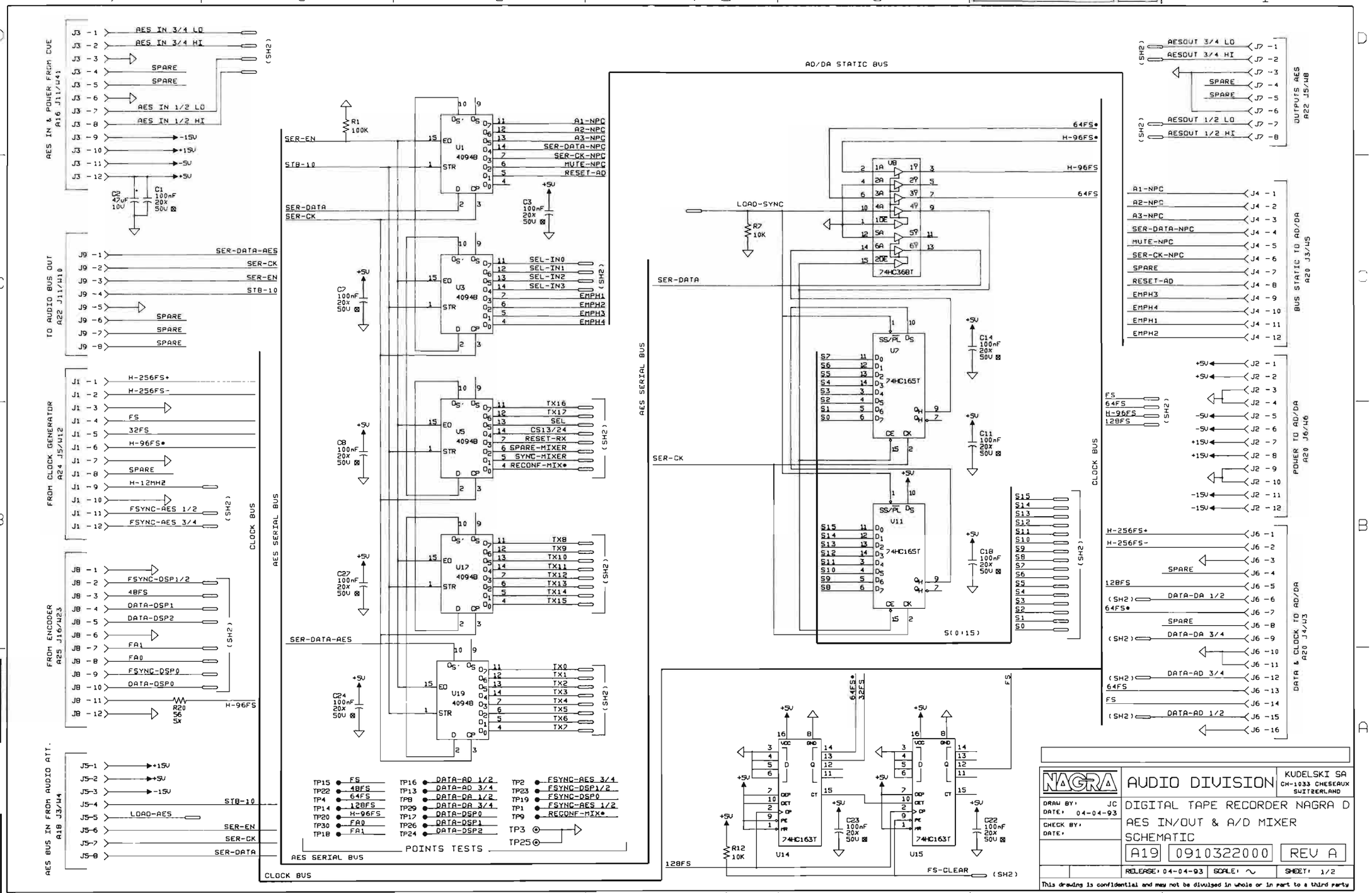
0910322000[A]
1/2
AES IN & POWER FROM CUE A16 J11/W41
TO AUDIO BUS OUT A22 J11/W10
FROM CLOCK GENERATOR A24 J5/W12
FROM ENCODER A25 J16/W23
AES BUS IN FROM AUDIO ATT. A18 J3/W4
AES SERIAL BUS
CLOCK BUS
AD/DA STATIC BUS
OUTPUTS AES A22 J5/W8
BUS STATIC TO AD/DA A20 J3/W5
POWER TO AD/DA A20 J6/W6
DATA & CLOCK TO AD/DA A20 J4/W3
POINTS TESTS
NAGRA
AUDIO DIVISION
KUDELSKI SA
CH-1033 CHESEAUX
SWITZERLAND
DRAW BY: JC
DATE: 04-04-93
CHECK BY:
DATE:
DIGITAL TAPE RECORDER NAGRA D
AES IN/OUT & A/D MIXER
SCHEMATIC
A19
0910322000
REV A
RELEASE: 04-04-93
SCALE: ~
SHEET: 1/2
This drawing is confidential and may not be divulged in whole or in part to a third party

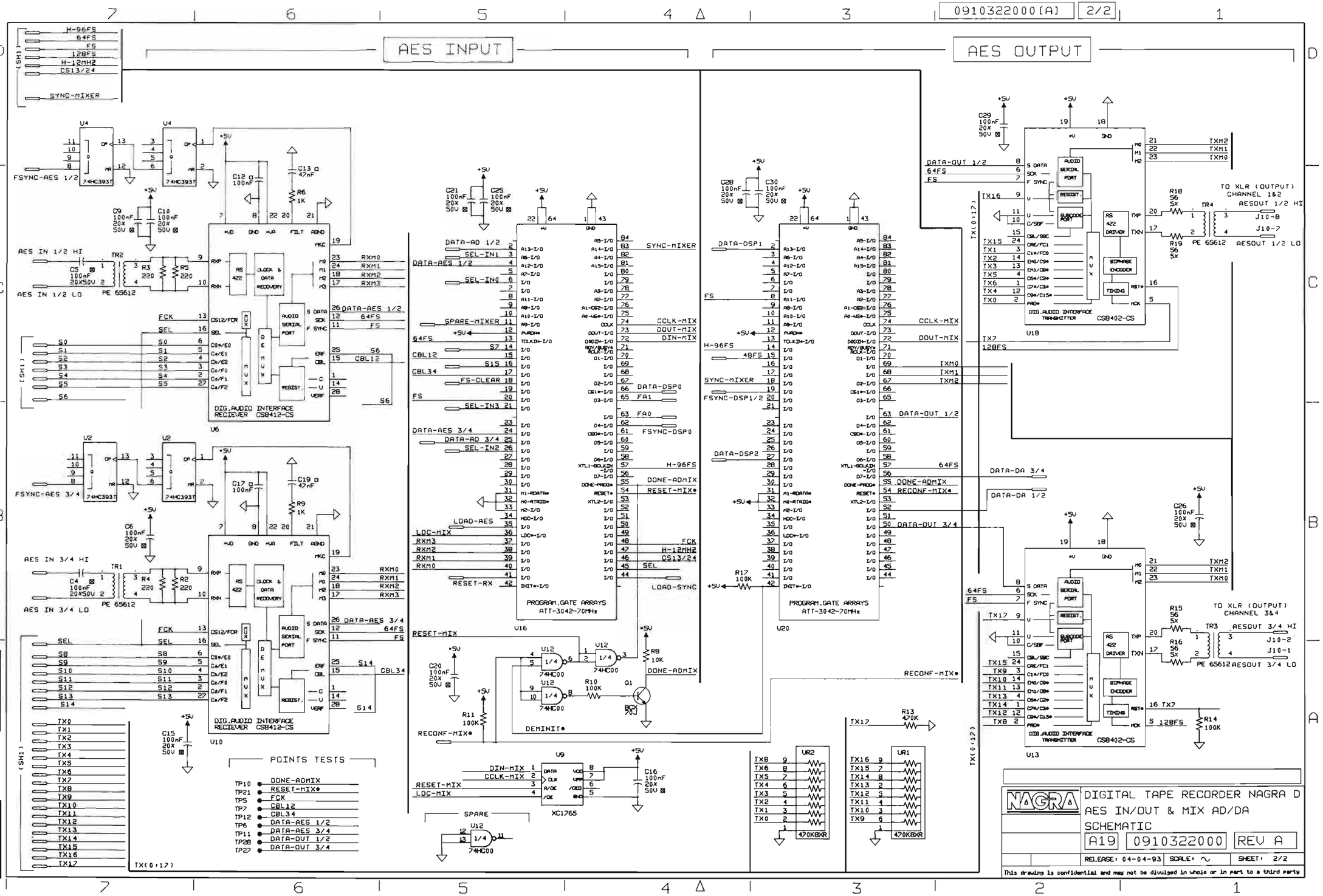
0910322000(A)
2/2
AES INPUT
AES OUTPUT
H-96FS
64FS
FS
128FS
H-12MH2
CS13/24
SYNC-MIXER
FSYNC-AES 1/2
AES IN 1/2 HI
AES IN 1/2 LO
PE 65612
DIG.AUDIO INTERFACE RECIEVER CS8412-CS
V6
FSYNC-AES 3/4
AES IN 3/4 HI
AES IN 3/4 LO
DIG.AUDIO INTERFACE RECIEVER CS8412-CS
V10
PROGRAM.GATE ARRAYS ATT-3042-70MHz
V16
V20
DIG.AUDIO INTERFACE TRANSMITTER CS8402-CS
V18
V13
TO XLR (OUTPUT) CHANNEL 1&2
TO XLR (OUTPUT) CHANNEL 3&4
AESOUT 1/2 HI
AESOUT 1/2 LO
AESOUT 3/4 HI
AESOUT 3/4 LO
POINTS TESTS
TP10 DONE-ADMIX
TP21 RESET-MIX*
TP5 FCK
TP7 CBL12
TP12 CBL34
TP6 DATA-AES 1/2
TP11 DATA-AES 3/4
TP28 DATA-OUT 1/2
TP27 DATA-OUT 3/4
SPARE
XC1765
470KBXR
NAGRA
DIGITAL TAPE RECORDER NAGRA D
AES IN/OUT & MIX AD/DA
SCHEMATIC
A19
0910322000
REV A
RELEASE: 04-04-93
SCALE: ~
SHEET: 2/2
This drawing is confidential and may not be divulged in whole or in part to a third party

9110320000 [B] 1/1

U2,U4,U8,U10 NEED TO BE MATCHED
IDENTICAL SERIAL NUMBER ON ALL 4 IC'S

SHIELD 0110320002

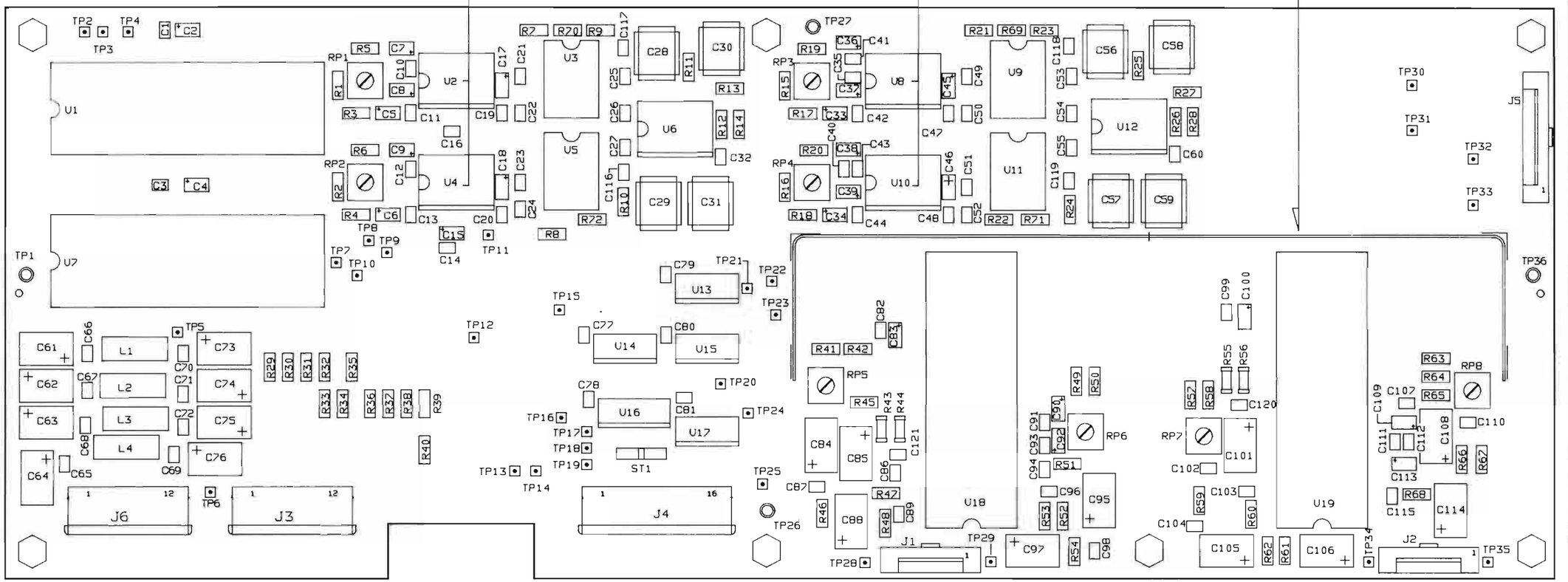

WARNING: HANDLE ONLY AT STATIC SAFE WORK STATION
ATTENTION: MANIPULATION UNIQUEMENT AUTORISEE SUR POSTE DE TRAVAIL PROTEGE
ACHTUNG: HANDHABUNG DAHER NUR AN GESCHÜTZTEN ARBEITSPLÄTZEN ERLAUBT

NAGRA	AUDIO DIVISION	KUDELSKI SA CH-1033 CHESEAUX SWITZERLAND
DRAW BY: JC DATE: 04-04-93	DIGITAL TAPE RECORDER NAGRA D	
CHECK BY: DATE:	AD/DA CONVERTER (18 BITS)	
	PRINTED-WIRING ASSEMBLY	
	A20 9110320000	REV B
	RELEASE: 04-04-93 SCALE: ~	SHEET: 1/1

This drawing is confidential and may not be divulged in whole or in part to a third party

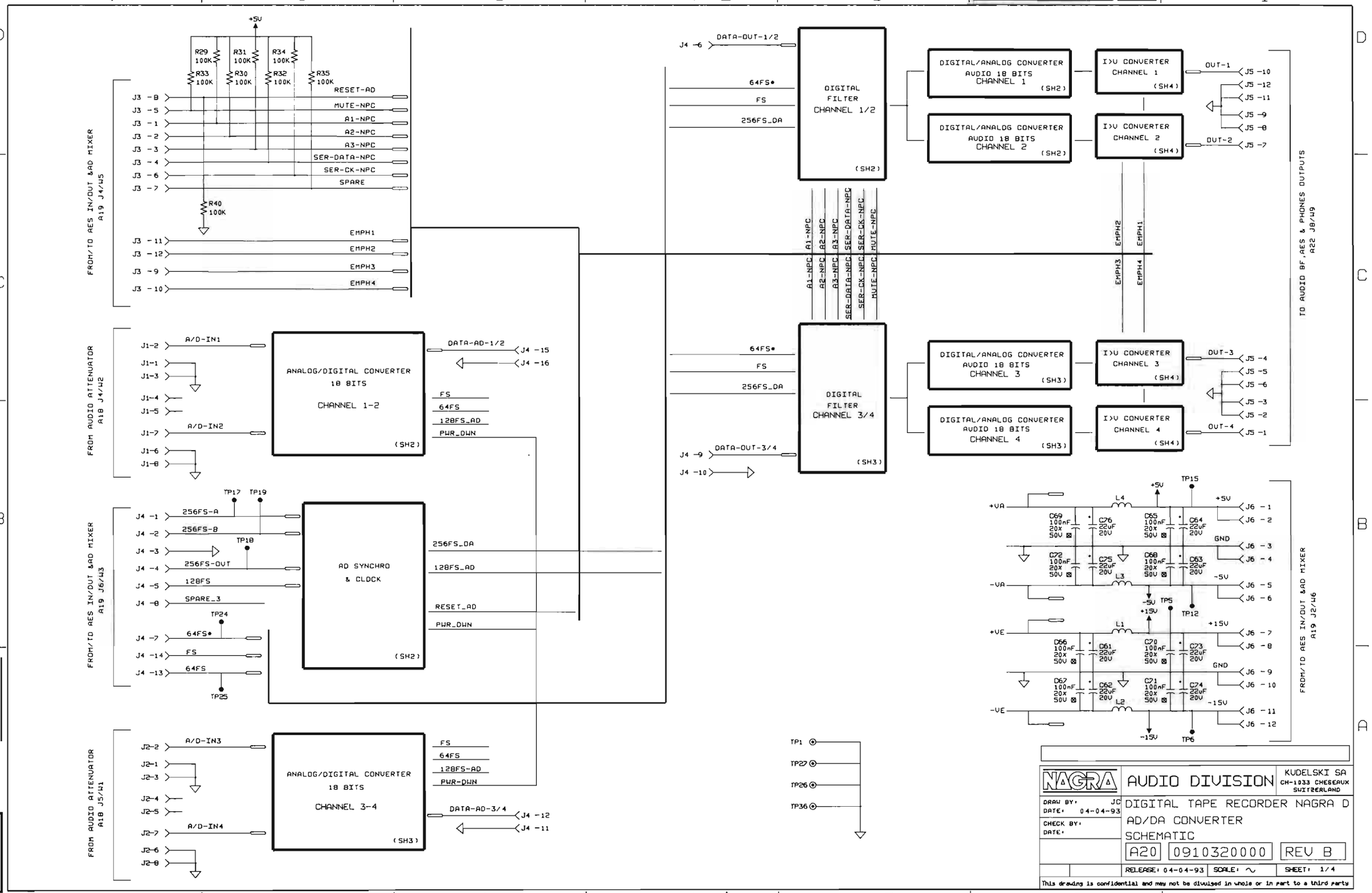

NAGRA AUDIO DIVISION
KUDELSKI SA
CH-1033 CHESEAUX
SWITZERLAND

DRAW BY: JC
DATE: 04-04-93
CHECK BY:
DATE:

DIGITAL TAPE RECORDER NAGRA D
AD/DA CONVERTER
SCHEMATIC

A20 | 0910320000 | REV B

RELEASE: 04-04-93 | SCALE: ~ | SHEET: 1/4

This drawing is confidential and may not be divulged in whole or in part to a third party

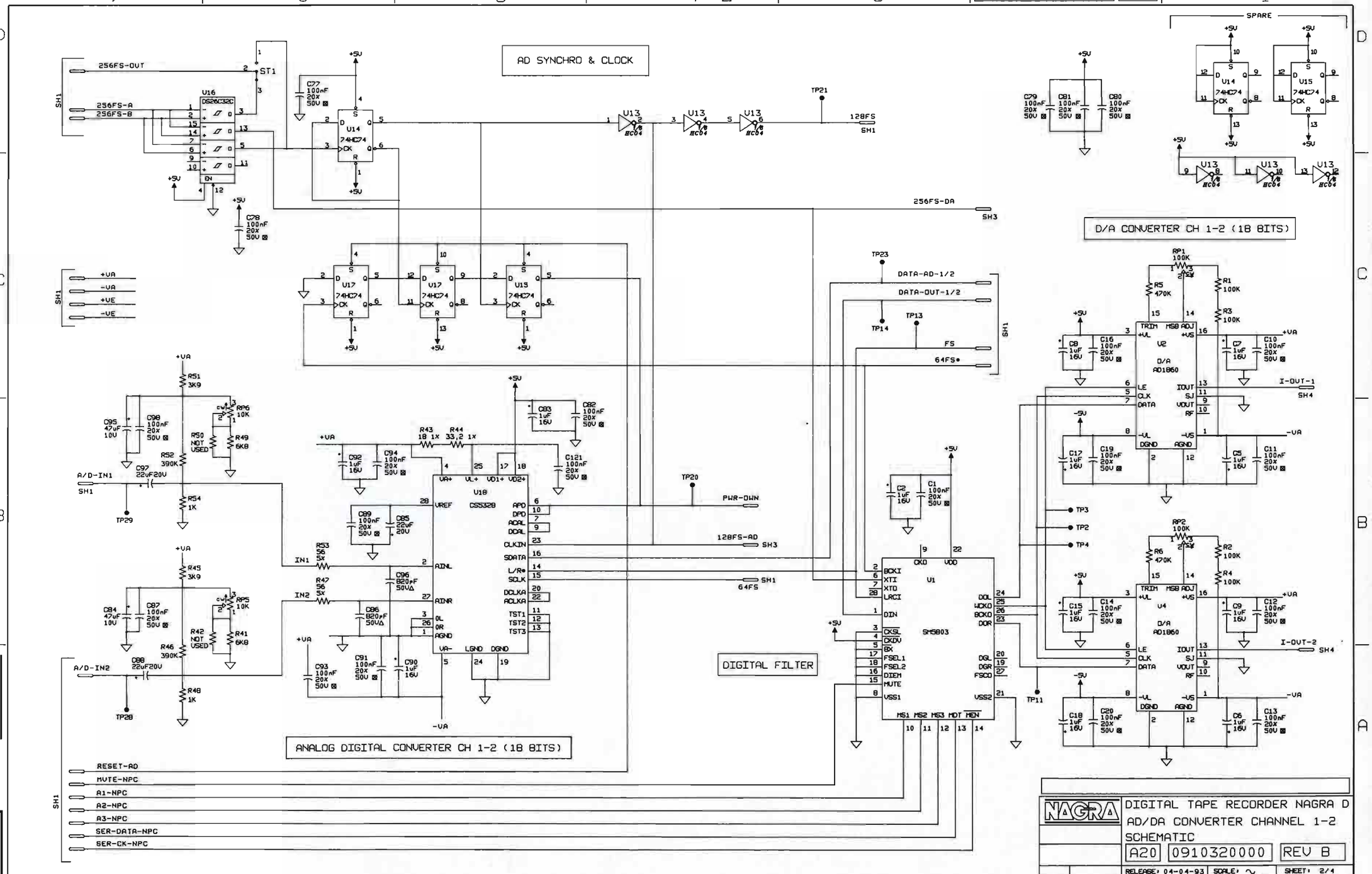

NAGRA

DIGITAL TAPE RECORDER NAGRA D
AD/DA CONVERTER CHANNEL 1-2
SCHEMATIC

A20	0910320000	REV B
	RELEASE: 04-04-93	SCALE: ~	SHEET: 2/4

This drawing is confidential and may not be divulged in whole or in part to a third party

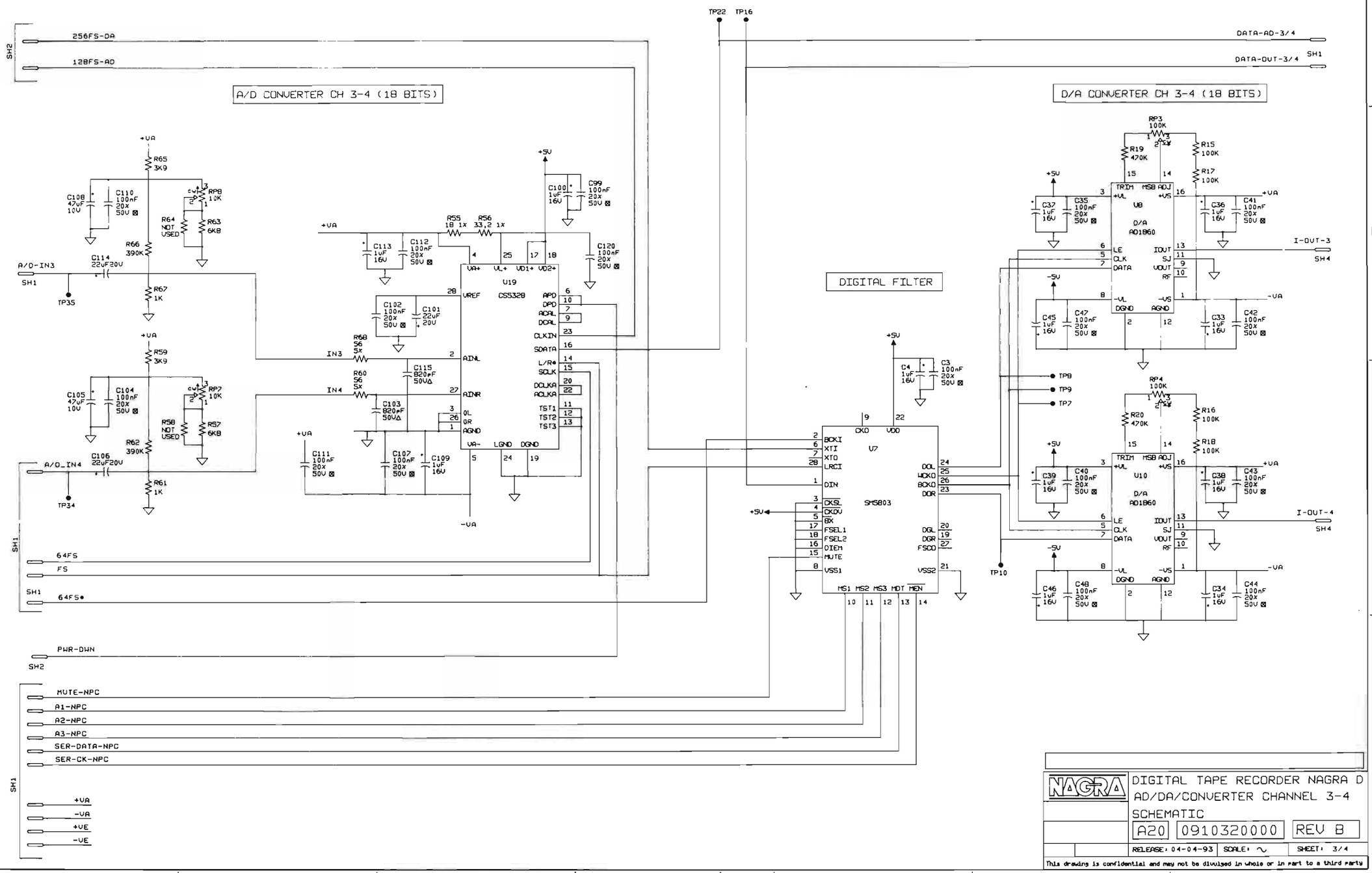

NAGRA

DIGITAL TAPE RECORDER NAGRA D
AD/DA/CONVERTER CHANNEL 3-4
SCHEMATIC

A20 | 0910320000 | REV B

RELEASE: 04-04-93 | SCALE: ~ | SHEET: 3/4

This drawing is confidential and may not be divulged in whole or in part to a third party

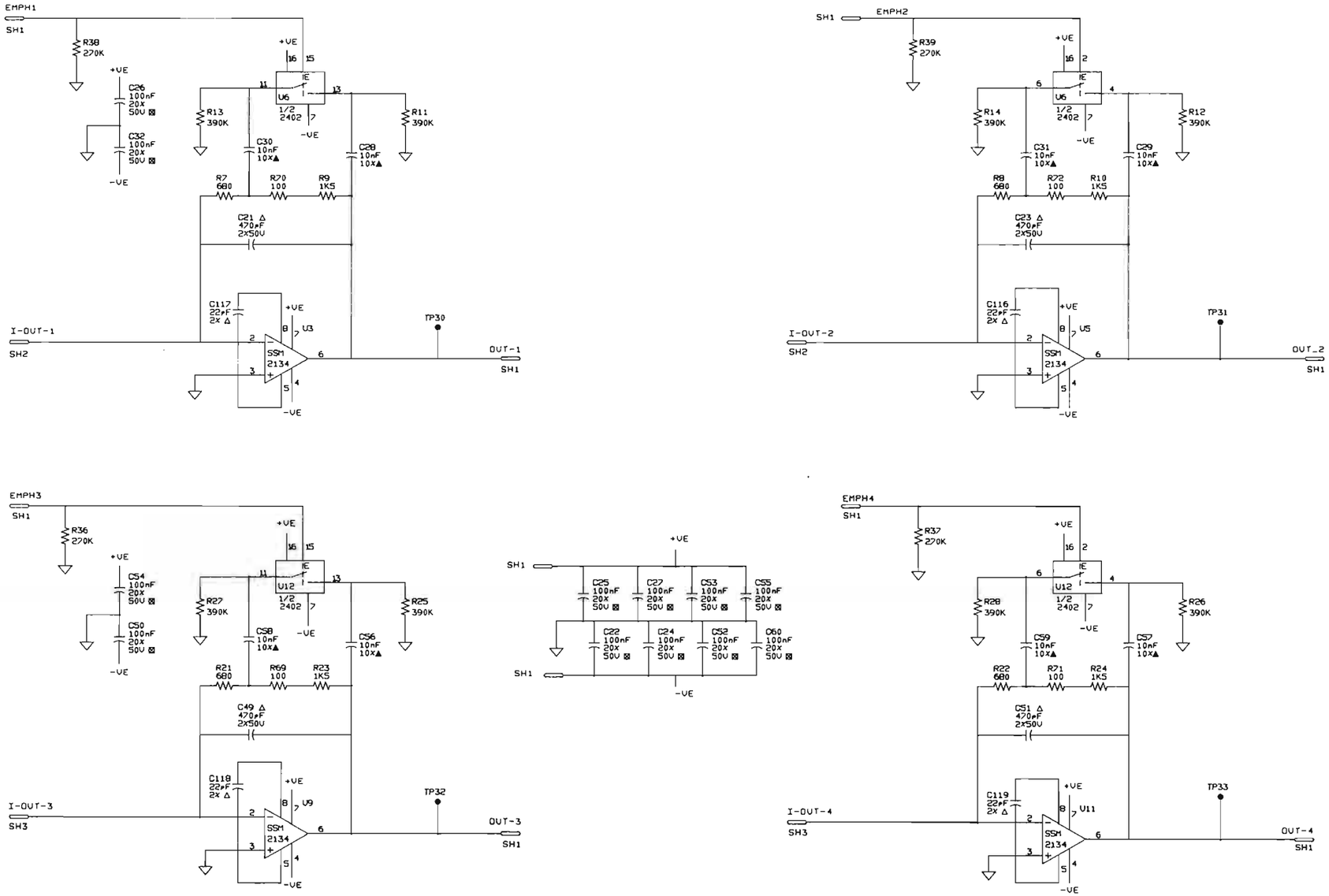

NAGRA

DIGITAL TAPE RECORDER NAGRA D
I>V CONVERTER CHANNEL 1-4
SCHEMATIC

A20 | 0910320000 | REV B

RELEASE: 04-04-93 | SCALE: ~ | SHEET: 4/4

This drawing is confidential and may not be divulged in whole or in part to a third party

U3,U4,U11,U12:NEED TO BE MATCHED
IDENTICAL SERIAL NUMBER ON ALL IC'S

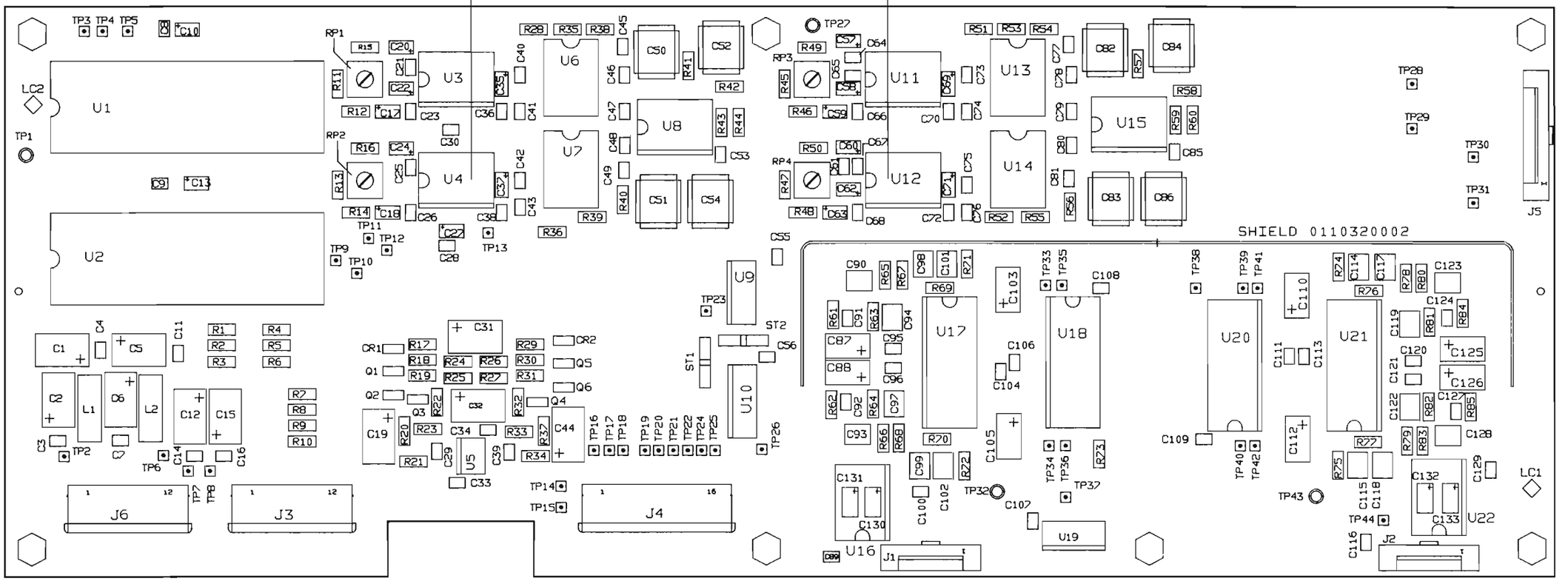

NOTES:

U3,U4,U11,U12; MEME NUMEROS DE SERIE

SOUDER LE BLINDAGE SUR LES PLAGES DE MASSE DEMASQUEES

ARASER LES SOUDURES TRAVERSANTES A 0,5mm

LC1,LC2 MIRES OPTIQUE DE POSAGE DES COMPOSANTS SMD

WARNING: HANDLE ONLY AT STATIC SAFE WORK STATION
ATTENTION: MANIPULATION UNIQUEMENT AUTORISEE SUR POSTE DE TRAVAIL PROTEGE
ACHTUNG: HANDHABUNG DAHER NUR AN GESCHÜTZTEN ARBEITSPLÄTZEN ERLAUBT

NAGRA	AUDIO DIVISION	KUDELSKI SA CH-1033 CHESEAUX SWITZERLAND
DRAW BY: JC DATE: 09-08-93	DIGITAL TAPE RECORDER NAGRA D	
CHECK BY: DATE:	A/D-D/A CONVERTER 20 BITS	
	PRINTED-WIRING ASSEMBLY	
	A20 9110321000 REV A	
	RELEASE: 09-08-93 SCALE: ~ SHEET: 1/1	

This drawing is confidential and may not be divulged in whole or in part to a third party

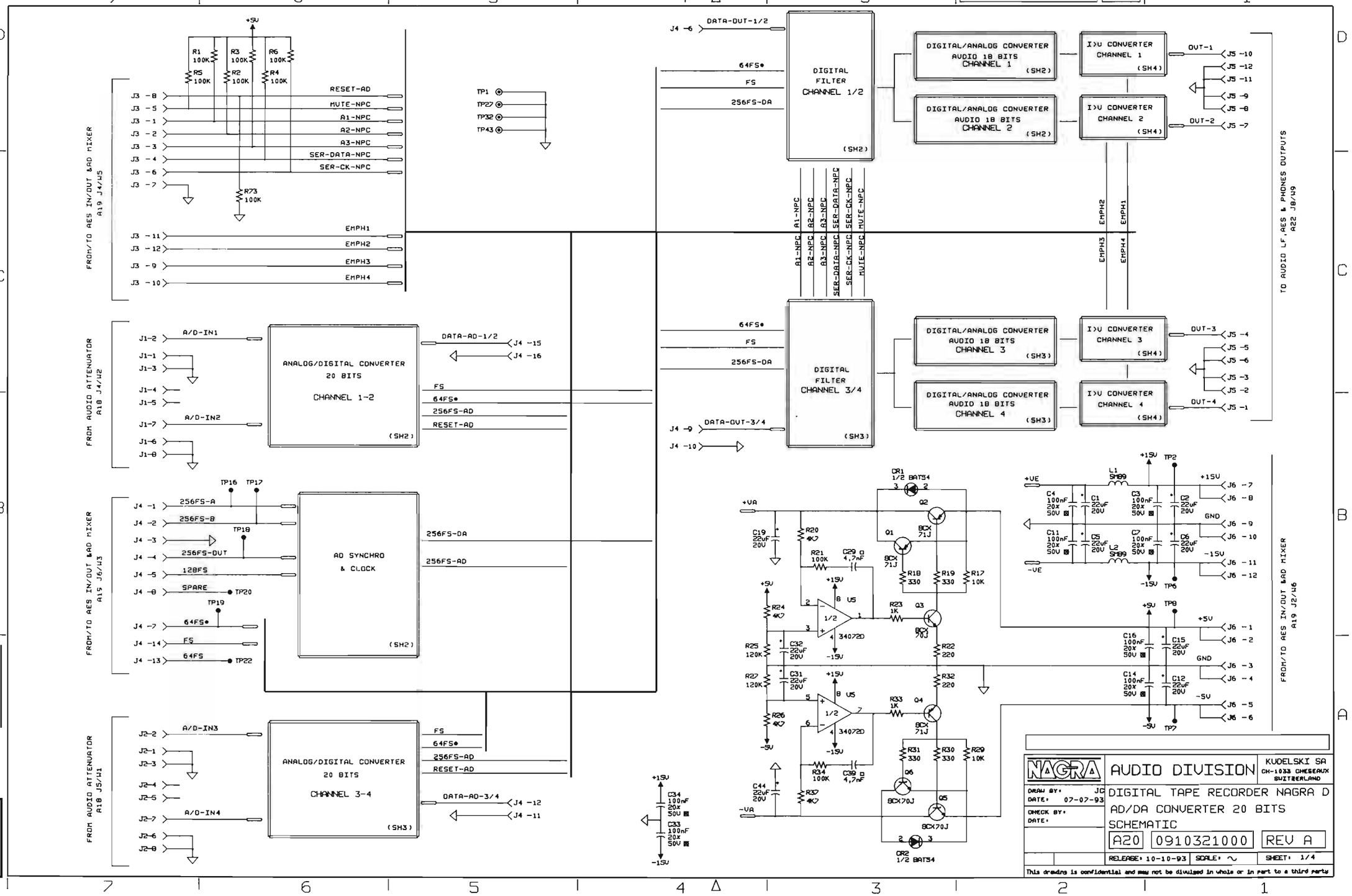
0910321000(A)
1/4
FROM/TO AES IN/OUT &AD MIXER A19 J4/W5
FROM AUDIO ATTENUATOR A18 J4/W2
FROM/TO AES IN/OUT &AD MIXER A19 J6/W3
FROM AUDIO ATTENUATOR A18 J5/W1
TO AUDIO LF,AES & PHONES OUTPUTS A22 J8/W9
FROM/TO AES IN/OUT &AD MIXER A19 J2/W6
DIGITAL FILTER CHANNEL 1/2 (SH2)
DIGITAL FILTER CHANNEL 3/4 (SH3)
DIGITAL/ANALOG CONVERTER AUDIO 18 BITS CHANNEL 1 (SH2)
DIGITAL/ANALOG CONVERTER AUDIO 18 BITS CHANNEL 2 (SH2)
DIGITAL/ANALOG CONVERTER AUDIO 18 BITS CHANNEL 3 (SH3)
DIGITAL/ANALOG CONVERTER AUDIO 18 BITS CHANNEL 4 (SH3)
I>V CONVERTER CHANNEL 1 (SH4)
I>V CONVERTER CHANNEL 2 (SH4)
I>V CONVERTER CHANNEL 3 (SH4)
I>V CONVERTER CHANNEL 4 (SH4)
ANALOG/DIGITAL CONVERTER 20 BITS CHANNEL 1-2 (SH2)
ANALOG/DIGITAL CONVERTER 20 BITS CHANNEL 3-4 (SH3)
AD SYNCHRO & CLOCK (SH2)
DATA-OUT-1/2
DATA-OUT-3/4
DATA-AD-1/2
DATA-AD-3/4
64FS*
FS
256FS-DA
256FS-AD
RESET-AD
MUTE-NPC
A1-NPC
A2-NPC
A3-NPC
SER-DATA-NPC
SER-CK-NPC
EMPH1
EMPH2
EMPH3
EMPH4
A/D-IN1
A/D-IN2
A/D-IN3
A/D-IN4
256FS-A
256FS-B
256FS-OUT
128FS
SPARE
OUT-1
OUT-2
OUT-3
OUT-4
+VA
-VA
+VE
-VE
+15V
-15V
+5V
-5V
GND
NAGRA
AUDIO DIVISION
KUDELSKI SA
CH-1033 CHESEAUX
SWITZERLAND
DRAW BY: JC
DATE: 07-07-93
CHECK BY:
DATE:
DIGITAL TAPE RECORDER NAGRA D
AD/DA CONVERTER 20 BITS
SCHEMATIC
A20
0910321000
REV A
RELEASE: 10-10-93
SCALE: ~
SHEET: 1/4
This drawing is confidential and may not be divulged in whole or in part to a third party

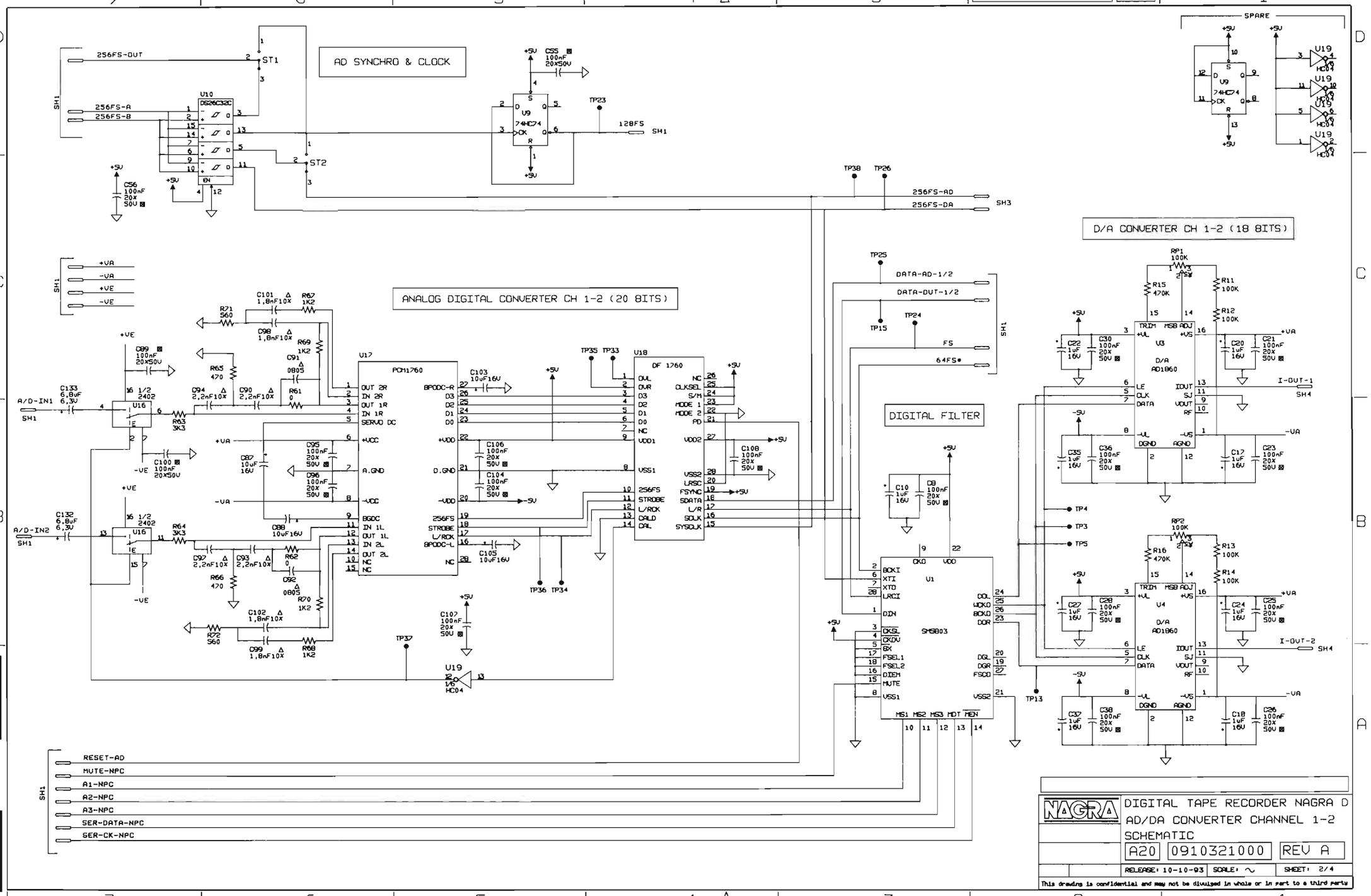
AD SYNCHRO & CLOCK
ANALOG DIGITAL CONVERTER CH 1-2 (20 BITS)
DIGITAL FILTER
D/A CONVERTER CH 1-2 (18 BITS)
SPARE
256FS-OUT
256FS-A
256FS-B
128FS
256FS-AD
256FS-DA
DATA-AD-1/2
DATA-OUT-1/2
FS
64FS*
A/D-IN1
A/D-IN2
I-OUT-1
I-OUT-2
RESET-AD
MUTE-NPC
A1-NPC
A2-NPC
A3-NPC
SER-DATA-NPC
SER-CK-NPC
U10 DS26C32C
U9 74HC74
U16 1/2 2402
U17 PCM1760
U18 DF 1760
U1 SM5803
U3 D/A AD1860
U4 D/A AD1860
U19 HC04
RP1 100K
RP2 100K
NAGRA
DIGITAL TAPE RECORDER NAGRA D
AD/DA CONVERTER CHANNEL 1-2
SCHEMATIC
A20 0910321000 REV A
RELEASE: 10-10-93 SCALE: ~ SHEET: 2/4
This drawing is confidential and may not be divulged in whole or in part to a third party

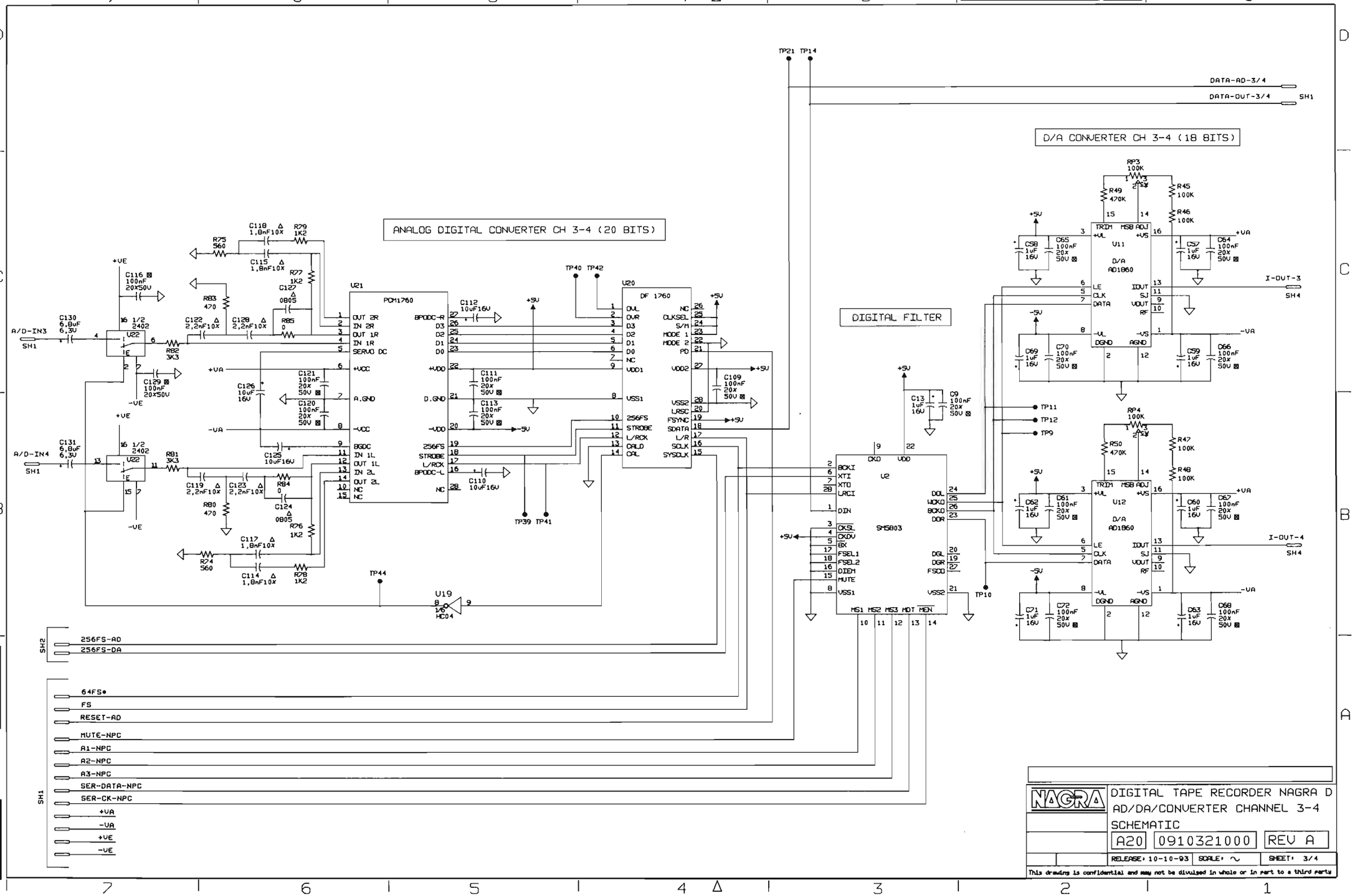

DIGITAL TAPE RECORDER NAGRA D
AD/DA/CONVERTER CHANNEL 3-4
SCHEMATIC

A20 | 0910321000 | REV A

RELEASE: 10-10-93 | SCALE: ~ | SHEET: 3/4

This drawing is confidential and may not be divulged in whole or in part to a third party

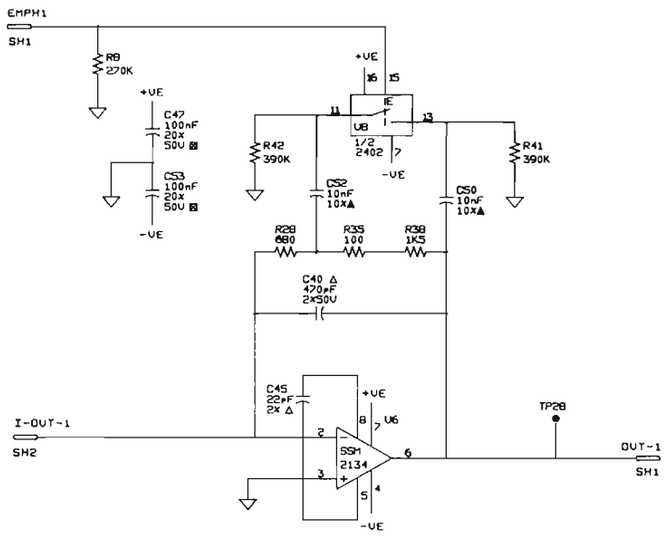

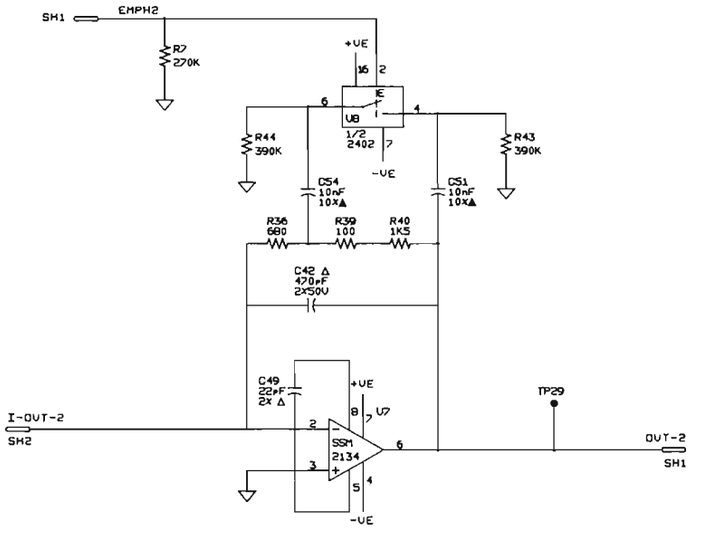

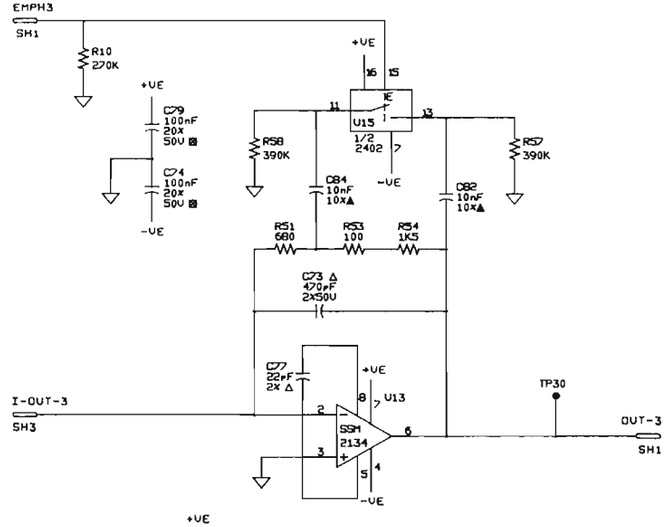

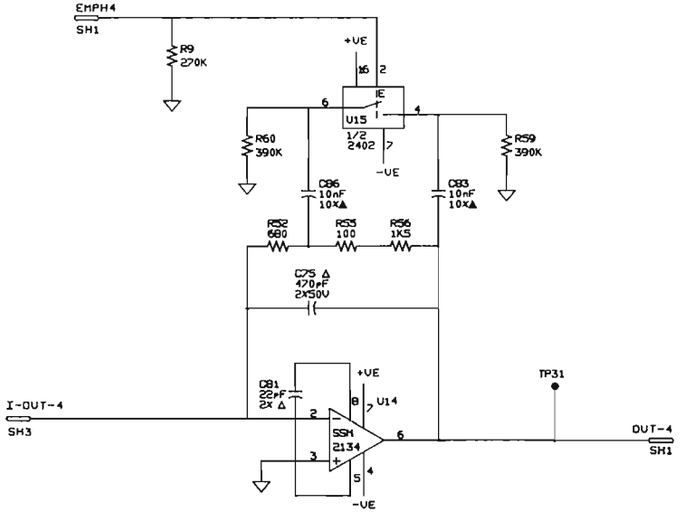

NAGRA

DIGITAL TAPE RECORDER NAGRA D
I>V CONVERTER CHANNEL 1-4
SCHEMATIC

A20 | 0910321000 | REV A

RELEASE: 10-10-93 | SCALE: ~ | SHEET: 4/4

This drawing is confidential and may not be divulged in whole or in part to a third party

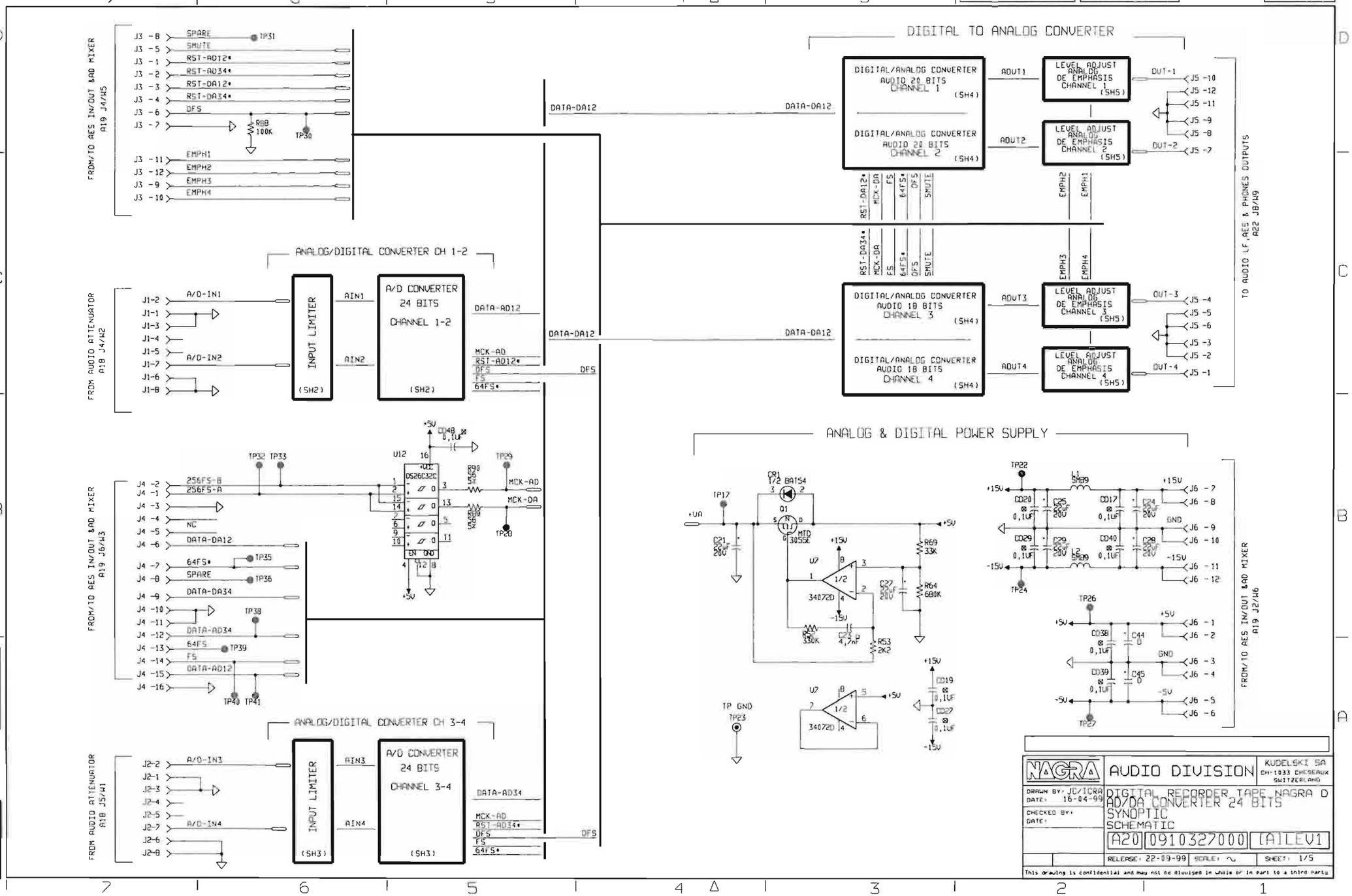
0910327000 [A] LEV 1
SH 1/5
FROM/TO AES IN/OUT &AD MIXER A19 J4/W5
J3 -8 SPARE TP31
J3 -5 SMUTE
J3 -1 RST-AD12*
J3 -2 RST-AD34*
J3 -3 RST-DA12*
J3 -4 RST-DA34*
J3 -6 DFS
J3 -7 R88 100K TP30
J3 -11 EMPH1
J3 -12 EMPH2
J3 -9 EMPH3
J3 -10 EMPH4
DIGITAL TO ANALOG CONVERTER
DIGITAL/ANALOG CONVERTER AUDIO 20 BITS CHANNEL 1 (SH4)
DIGITAL/ANALOG CONVERTER AUDIO 20 BITS CHANNEL 2 (SH4)
DIGITAL/ANALOG CONVERTER AUDIO 18 BITS CHANNEL 3 (SH4)
DIGITAL/ANALOG CONVERTER AUDIO 18 BITS CHANNEL 4 (SH4)
LEVEL ADJUST ANALOG DE EMPHASIS CHANNEL 1 (SH5)
LEVEL ADJUST ANALOG DE EMPHASIS CHANNEL 2 (SH5)
LEVEL ADJUST ANALOG DE EMPHASIS CHANNEL 3 (SH5)
LEVEL ADJUST ANALOG DE EMPHASIS CHANNEL 4 (SH5)
ADUT1
ADUT2
ADUT3
ADUT4
OUT-1
OUT-2
OUT-3
OUT-4
J5 -10
J5 -12
J5 -11
J5 -9
J5 -8
J5 -7
J5 -4
J5 -5
J5 -6
J5 -3
J5 -2
J5 -1
TO AUDIO LF,AES & PHONES OUTPUTS A22 JB/W9
DATA-DA12
RST-DA12*
MCK-DA
FS
64FS*
DFS
SMUTE
RST-DA34*
EMPH1
EMPH2
EMPH3
EMPH4
ANALOG/DIGITAL CONVERTER CH 1-2
FROM AUDIO ATTENUATOR A18 J4/W2
J1-2 A/D-IN1
J1-1
J1-3
J1-4
J1-5
J1-7 A/D-IN2
J1-6
J1-8
INPUT LIMITER (SH2)
AIN1
AIN2
A/D CONVERTER 24 BITS CHANNEL 1-2 (SH2)
DATA-AD12
MCK-AD
RST-AD12*
DFS
FS
64FS*
ANALOG & DIGITAL POWER SUPPLY
FROM/TO AES IN/OUT &AD MIXER A19 J6/W3
J4 -2 256FS-B
J4 -1 256FS-A
J4 -3
J4 -4 NC
J4 -5
J4 -6 DATA-DA12
J4 -7 64FS* TP35
J4 -8 SPARE TP36
J4 -9 DATA-DA34
J4 -10
J4 -11
J4 -12 DATA-AD34
J4 -13 64FS TP39
J4 -14 FS
J4 -15 DATA-AD12
J4 -16
TP32 TP33
TP38
TP40 TP41
U12 DS26C32C
R90 52,5
R89 52,5
TP29 MCK-AD
TP28 MCK-DA
CD48 0,1uF
+5V
TP17
+VA
C21 22uF 20V
CR1 1/2 BAT54
Q1 MTD 3055E
R69 33K
R64 680K
C27 22uF 20V
R52 330K
C23 4,7nF
R53 2K2
U7 34072D
TP GND TP23
CD19 0,1uF
CD27 0,1uF
TP22
L1 SM99
L2 SM99
CD20 0,1uF
C25 22uF 20V
CD17 0,1uF
C24 22uF 20V
CD29 0,1uF
C29 22uF 20V
CD40 0,1uF
C28 22uF 20V
+15V
-15V
GND
TP24
TP26
TP27
CD38 0,1uF
C44 0
CD39 0,1uF
C45 0
J6 -7
J6 -8
J6 -9
J6 -10
J6 -11
J6 -12
J6 -1
J6 -2
J6 -3
J6 -4
J6 -5
J6 -6
FROM/TO AES IN/OUT &AD MIXER A19 J2/W6
ANALOG/DIGITAL CONVERTER CH 3-4
FROM AUDIO ATTENUATOR A18 J5/W1
J2-2 A/D-IN3
J2-1
J2-3
J2-4
J2-5
J2-7 A/D-IN4
J2-6
J2-8
INPUT LIMITER (SH3)
AIN3
AIN4
A/D CONVERTER 24 BITS CHANNEL 3-4 (SH3)
DATA-AD34
NAGRA
AUDIO DIVISION
KUDELSKI SA CH-1033 CHESEAUX SWITZERLAND
DRAWN BY: JC/ICRA
DATE: 16-04-99
CHECKED BY:
DATE:
DIGITAL RECORDER TAPE NAGRA D
AD/DA CONVERTER 24 BITS
SYNOPTIC
SCHEMATIC
A20 0910327000 [A]LEV1
RELEASE: 22-09-99
SCALE: ~
SHEET: 1/5
This drawing is confidential and may not be divulged in whole or in part to a third party

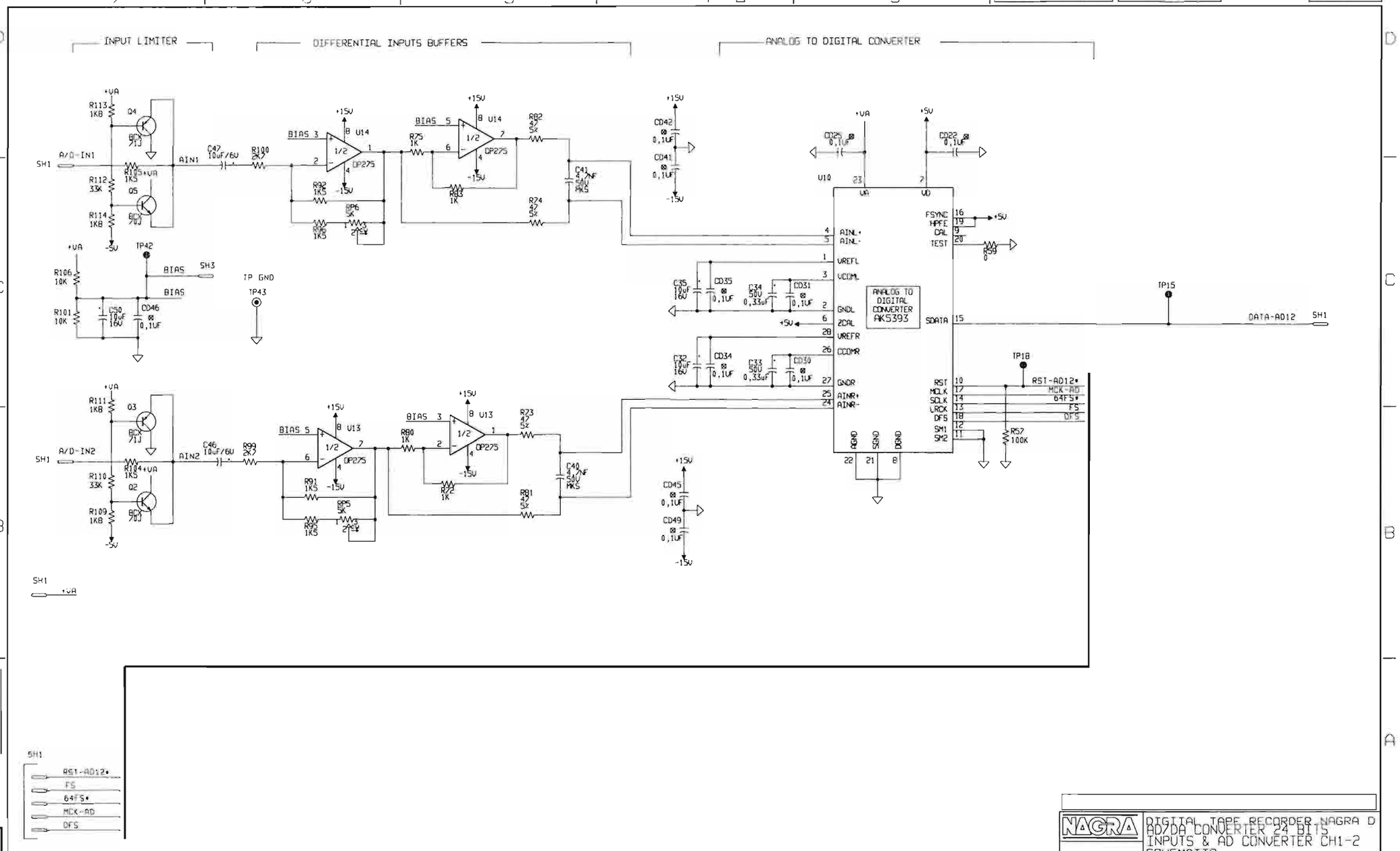

NAGRA

NAGRA

DIGITAL TAPE RECORDER NAGRA D
AD/DA CONVERTER 24 BITS
INPUTS & AD CONVERTER CH1-2
SCHEMATIC

0910327000 [A]LEV1

RELEASE: 22-09-99 SCALE: ~ SHEET: 2/5

This drawing is confidential and may not be divulged in whole or in part to a third party

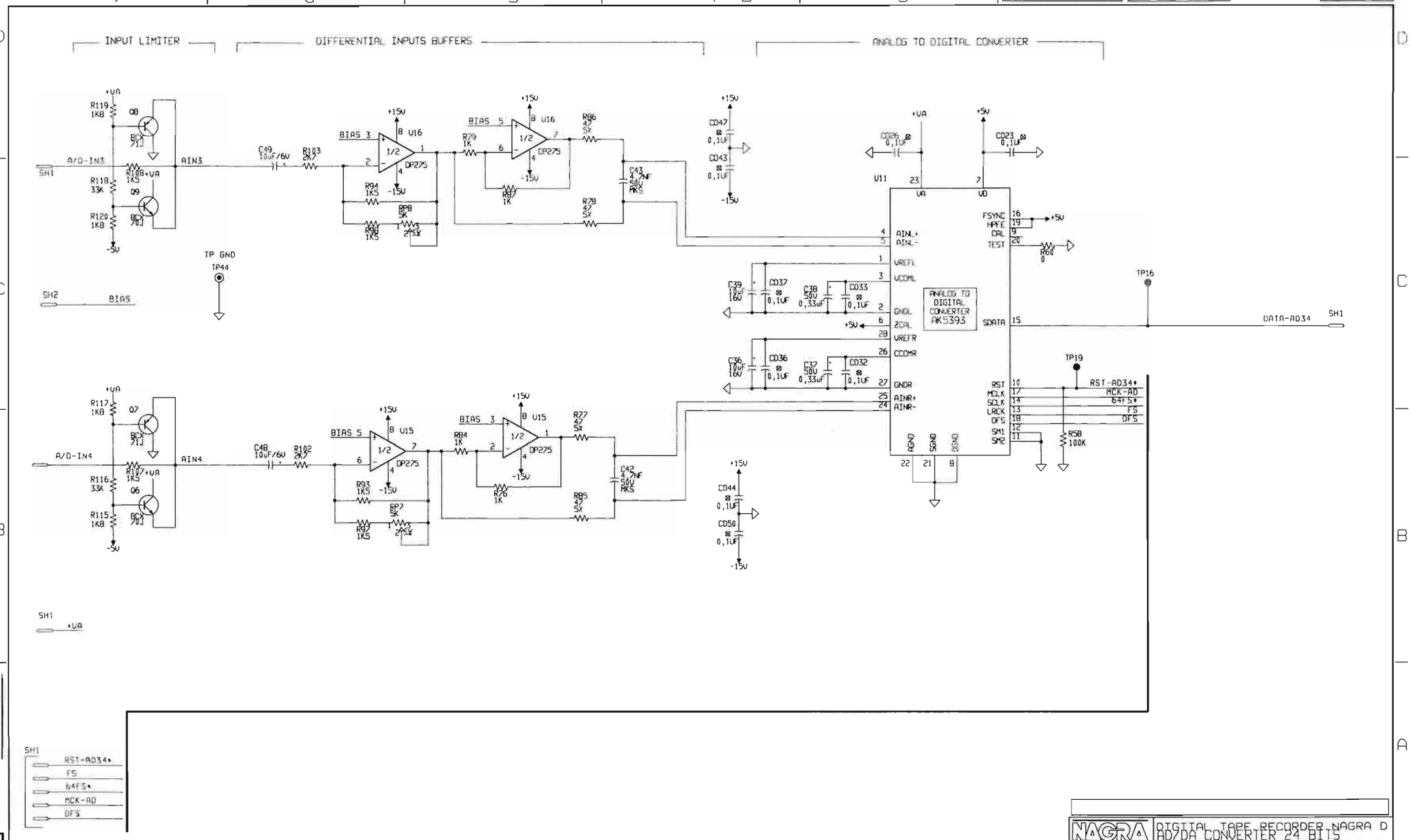

NAGRA

DIGITAL TAPE RECORDER NAGRA D
AD/DA CONVERTER 24 BITS
INPUTS & AD CONVERTER CH 3-4
SCHEMATIC

0910327000 [A]LEV1

RELEASE: 22-09-99 SCALE: ~ SHEET: 3/5

This drawing is confidential and may not be divulged in whole or in part to a third party

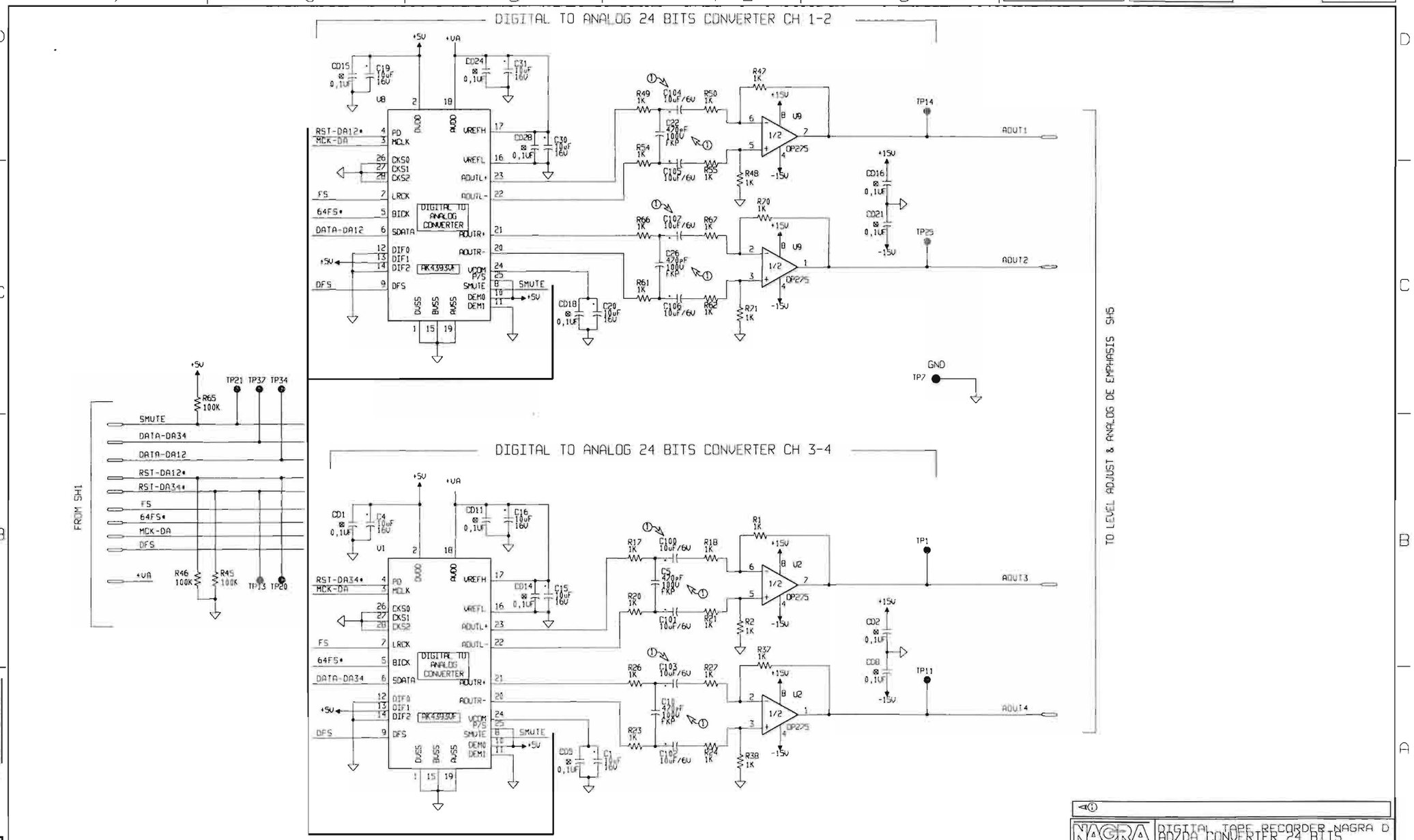

NAGRA

DIGITAL TOPE RECORDER NAGRA D
AD/DA CONVERTER 24 BITS
DA CONVERTER CH 1-2-3-4
SCHEMATIC

0910327000 [A]LEV1

RELEASE: 22-09-99 | SCALE: ~ | SHEET: 4/5

This drawing is confidential and may not be divulged in whole or in part to a third party

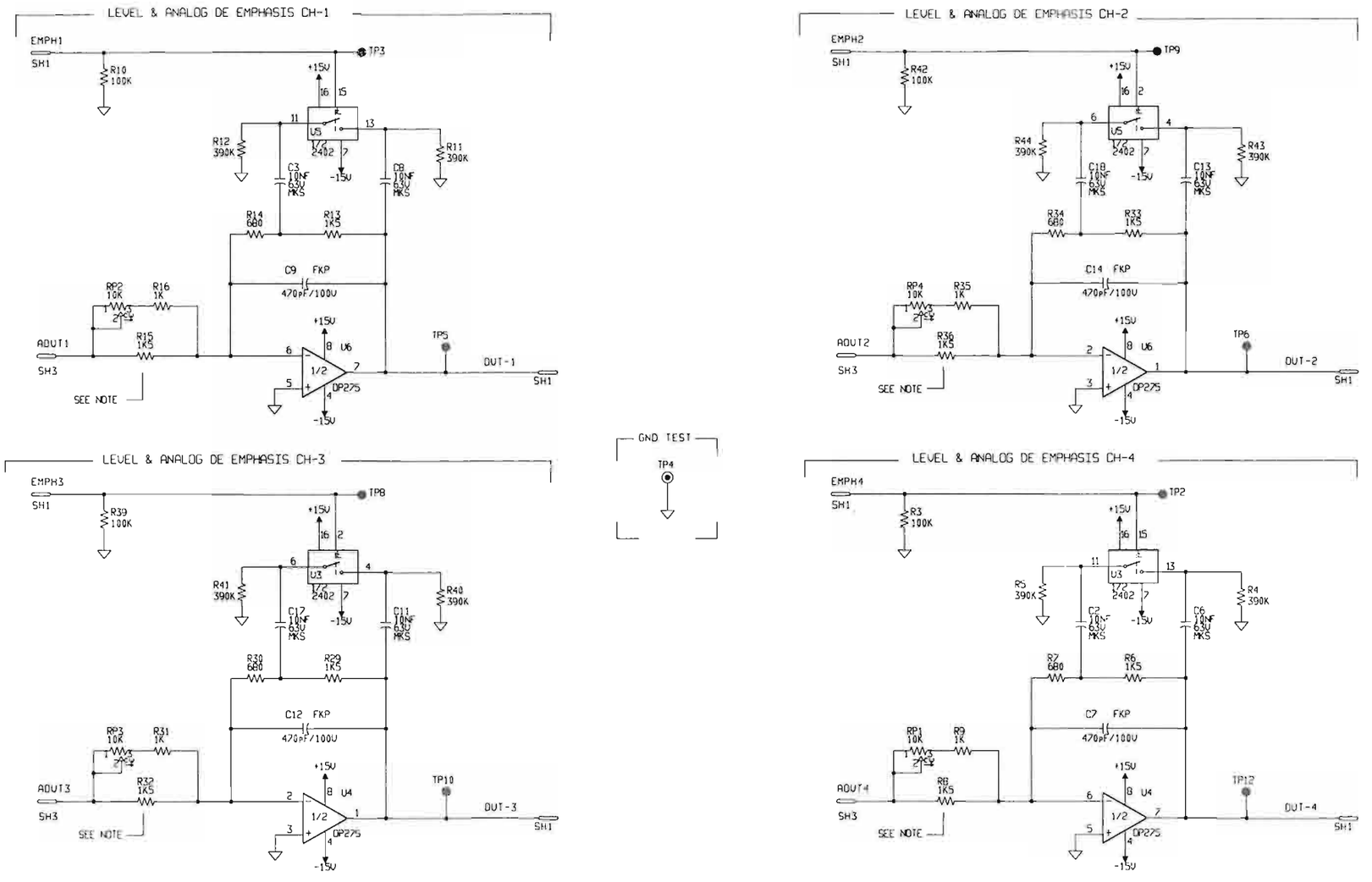

NOTE:
OUTPUTS LEVEL
LEVEL 3.1V RMS R=1K5
LEVEL 4.4V RMS R=1K

NAGRA

DIGITAL TAPE RECORDER NAGRA D
AD/DA CONVERTER 24 BITS
LEVEL ADJUST & ANALOG DE EMPH
SCHEMATIC

0910327000 [A]LEV1

RELEASE: 22-09-99 SCALE: ~ SHEET: 5/5

This drawing is confidential and may not be divulged in whole or in part to a third party

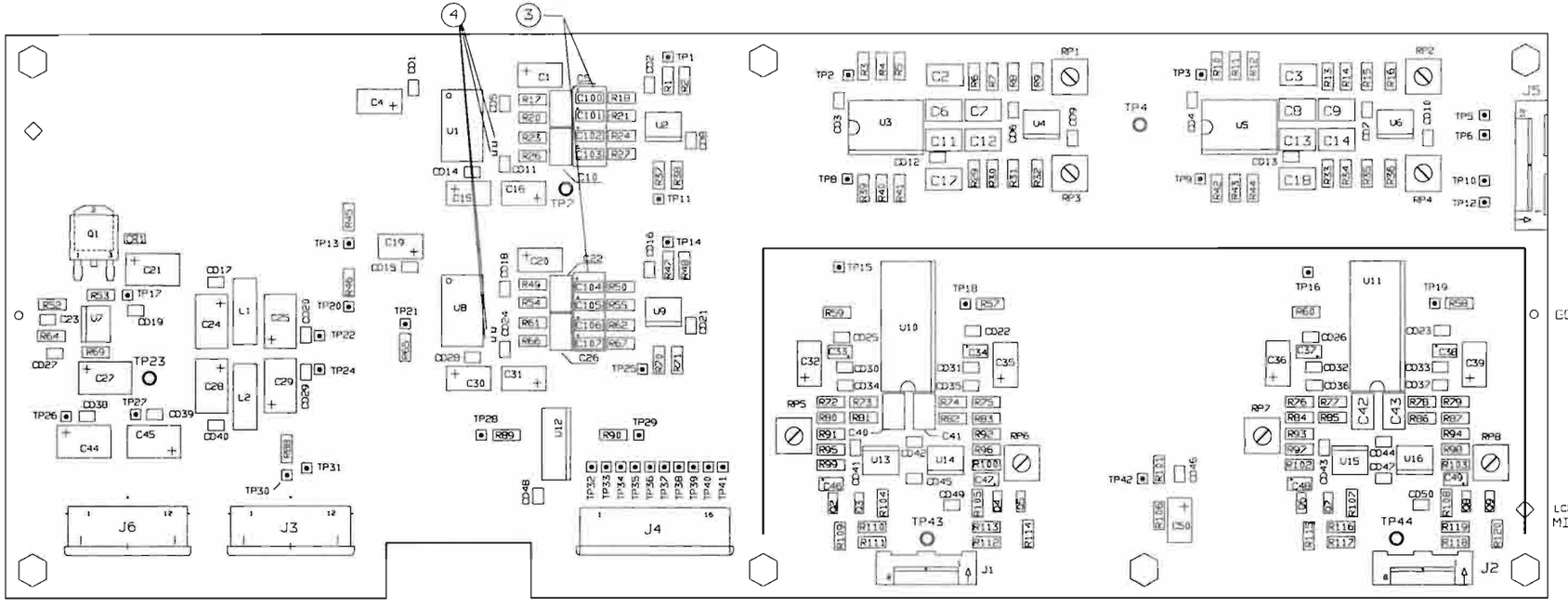

1- ISOLER 1- COUPER PISTE ENTRE Q3 BASE ET R104 MONTER EN REPRISE R110,R111
ISOLER AVEC SCOTCH CAPTON R110,R111 DES PLAGES A SOUDER, RETABLIR LA LIAISON R110-R111-Q3 BASE
MODIFICATION IDENTIQUE POUR Q4,R105,R112,R113/Q7,R107,R116,R117/Q8,R108,R118,R119
2- R74,R81,R82,R78,R85,R86 RESISTANCES 1/8W SELON DESSIN.
3- REMPLACER LES RESISTANCES R19,R22,R25,R28,R51,R56,R63,R68 PAR
DES CONDENSATEURS TANTALE 10UF/6V C100-C107
4- FAIRE LIAISON PAR SOUDURE ENTRE U1,17-18 / U1,15-16/ U8,17-18/ U8,15-16

A- SOUDER LE BLINDAGE SUR LES PLAGES DE MASSE DEMASQUEES
OPTION A CONFIRMER APRES TEST PROTOTYPE
B- ARASER LES SOUDURES TRAVERSANTES A 0,5mm
C- LC1,LC2 MIRES OPTIQUES DE POSE

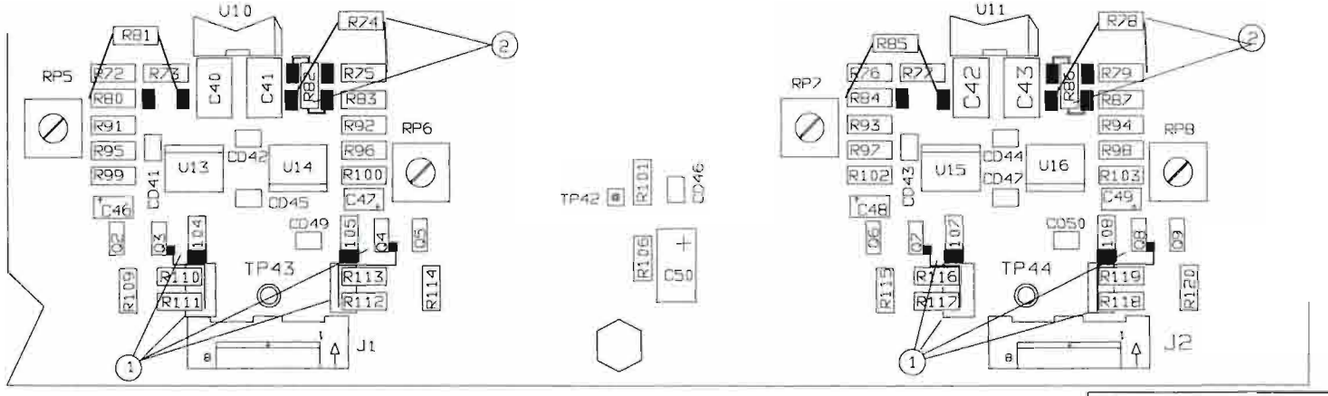

WARNING: HANDLE ONLY AT STATIC SAFE WORK STATION
ATTENTION: MANIPULATION UNIQUEMENT AUTORISEE SUR POSTE DE TRAVAIL PROTEGE
ACHTUNG: HANDHABUNG DAHER NUR AN GESCHÜTZTEN ARBEITSPLÄTZEN ERLAUBT

NAGRA	AUDIO DIVISION	KUDELSKI SA CH-1033 CHESEAUX SWITZERLAND
DRAWN BY: JC DATE: 20-05-99	DIGITAL TAPE RECORDER NAGRA D AD/DA CONVERTER (24 BIT)	
CHECKED BY: DATE:	PRINTED-WIRING ASSEMBLY	
	9110327000	[A]LEV0>1
	RELEASE: 10-08-99 SCALE: ~	SHEET: 1/1

This drawing is confidential and may not be divulged in whole or in part to a third party

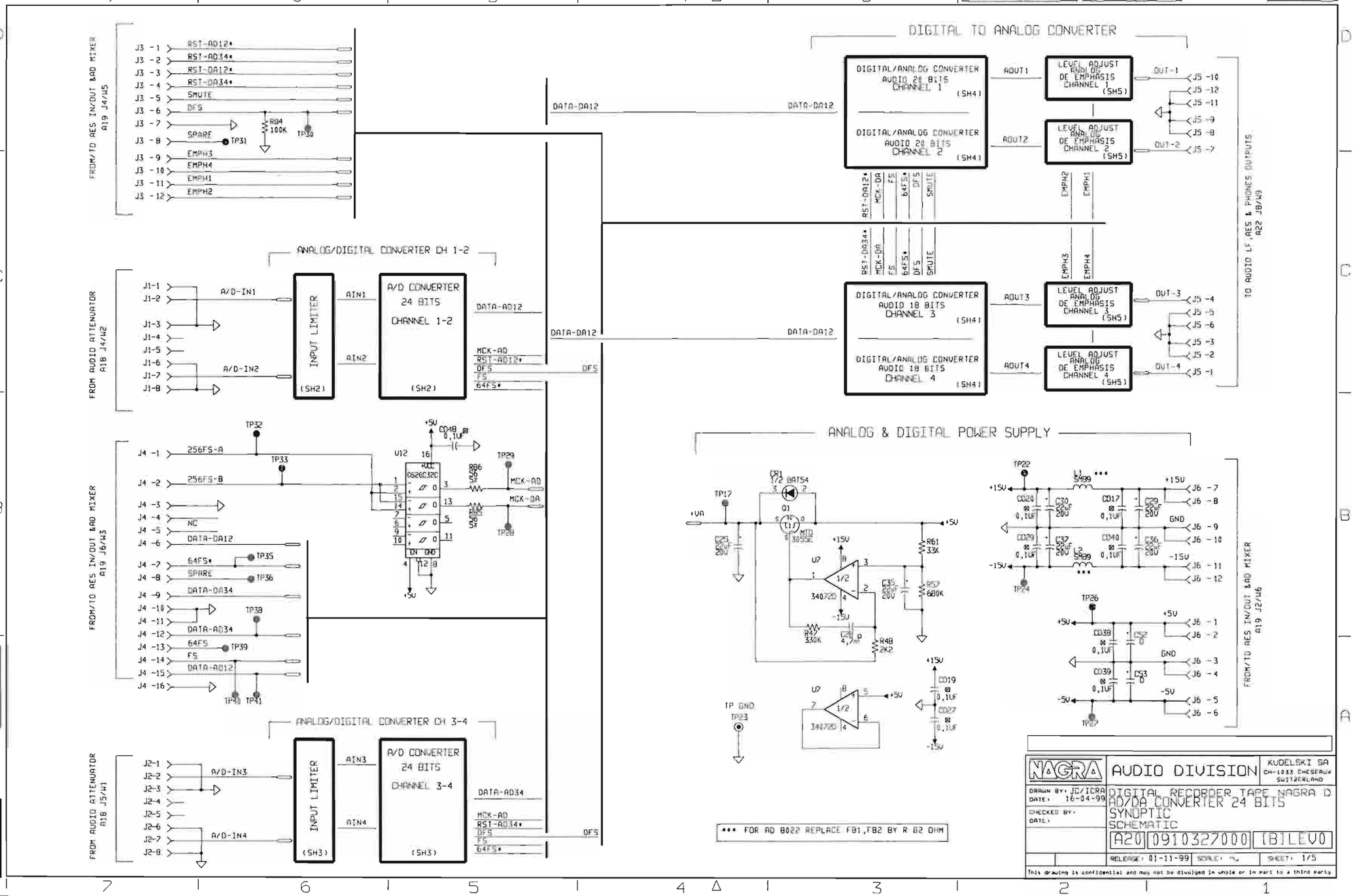
0910327000 [B] LEV 0
SH 1/5
FROM/TO AES IN/OUT &AD MIXER A19 J4/H5
J3 -1 RST-AD12*
J3 -2 RST-AD34*
J3 -3 RST-DA12*
J3 -4 RST-DA34*
J3 -5 SMUTE
J3 -6 DFS
J3 -7
J3 -8 SPARE
J3 -9 EMPH3
J3 -10 EMPH4
J3 -11 EMPH1
J3 -12 EMPH2
R94 100K
TP30
TP31
DIGITAL TO ANALOG CONVERTER
DIGITAL/ANALOG CONVERTER AUDIO 24 BITS CHANNEL 1 (SH4)
DIGITAL/ANALOG CONVERTER AUDIO 20 BITS CHANNEL 2 (SH4)
DIGITAL/ANALOG CONVERTER AUDIO 18 BITS CHANNEL 3 (SH4)
DIGITAL/ANALOG CONVERTER AUDIO 18 BITS CHANNEL 4 (SH4)
LEVEL ADJUST ANALOG DE EMPHASIS CHANNEL 1 (SH5)
LEVEL ADJUST ANALOG DE EMPHASIS CHANNEL 2 (SH5)
LEVEL ADJUST ANALOG DE EMPHASIS CHANNEL 3 (SH5)
LEVEL ADJUST ANALOG DE EMPHASIS CHANNEL 4 (SH5)
DATA-DA12
AOUT1
AOUT2
AOUT3
AOUT4
OUT-1
OUT-2
OUT-3
OUT-4
J5 -10
J5 -12
J5 -11
J5 -9
J5 -8
J5 -7
J5 -4
J5 -5
J5 -6
J5 -3
J5 -2
J5 -1
TO AUDIO LF,AES & PHONES OUTPUTS A22 J8/H3
RST-DA12* MCK-DA FS 64FS* DFS SMUTE EMPH2 EMPH1
RST-DA34* MCK-DA FS 64FS* DFS SMUTE EMPH3 EMPH4
ANALOG/DIGITAL CONVERTER CH 1-2
FROM AUDIO ATTENUATOR A18 J4/H2
J1-1
J1-2
J1-3
J1-4
J1-5
J1-6
J1-7
J1-8
A/D-IN1
A/D-IN2
INPUT LIMITER (SH2)
AIN1
AIN2
A/D CONVERTER 24 BITS CHANNEL 1-2 (SH2)
DATA-AD12
MCK-AD
RST-AD12*
DFS
FS
64FS*
ANALOG & DIGITAL POWER SUPPLY
FROM/TO AES IN/OUT &AD MIXER A19 J6/H3
J4 -1 256FS-A
J4 -2 256FS-B
J4 -3
J4 -4 NC
J4 -5
J4 -6 DATA-DA12
J4 -7 64FS*
J4 -8 SPARE
J4 -9 DATA-DA34
J4 -10
J4 -11
J4 -12 DATA-AD34
J4 -13 64FS
J4 -14 FS
J4 -15 DATA-AD12
J4 -16
TP32
TP33
TP35
TP36
TP38
TP39
TP40
TP41
TP29
TP28
U12 DS26C32C
R86 0,5
R87 0,5
MCK-AD
MCK-DA
CD48 0,1uF
+5V
TP17
+VA
CR1 1/2 BAT54
Q1 MID 3055C
CD25 20uF 20V
U7 1/2 34072D
R61 33K
R57 680K
C35 20uF 20V
R47 330K
C28 4,7nF
R48 2K2
TP GND
TP23
CD19 0,1uF
CD27 0,1uF
TP22
TP24
TP26
TP27
L1 5489
L2 5489
+15V
-15V
GND
CD26 0,1uF
CD17 0,1uF
CD29 0,1uF
CD40 0,1uF
C30 22uF 20V
C29 22uF 20V
C32 22uF 20V
C36 22uF 20V
J6 -7
J6 -8
J6 -9
J6 -10
J6 -11
J6 -12
FROM/TO AES IN/OUT &AD MIXER A19 J2/H6
CD38 0,1uF
CD39 0,1uF
C52 0
C53 0
J6 -1
J6 -2
J6 -3
J6 -4
J6 -5
J6 -6
ANALOG/DIGITAL CONVERTER CH 3-4
FROM AUDIO ATTENUATOR A18 J5/H1
J2-1
J2-2
J2-3
J2-4
J2-5
J2-6
J2-7
J2-8
A/D-IN3
A/D-IN4
INPUT LIMITER (SH3)
AIN3
AIN4
A/D CONVERTER 24 BITS CHANNEL 3-4 (SH3)
DATA-AD34
MCK-AD
RST-AD34*
DFS
FS
64FS*
*** FOR AD 8022 REPLACE FB1,FB2 BY R 82 OHM
NAGRA
AUDIO DIVISION
KUDELSKI SA
CH-1033 CHESEAUX SWITZERLAND
DRAWN BY: JC/ICRA
DATE: 16-04-99
CHECKED BY:
DATE:
DIGITAL RECORDER TAPE NAGRA D
AD/DA CONVERTER 24 BITS
SYNOPTIC
SCHEMATIC
A20 0910327000 [B] LEV0
RELEASE: 01-11-99
SCALE:
SHEET: 1/5
This drawing is confidential and may not be divulged in whole or in part to a third party

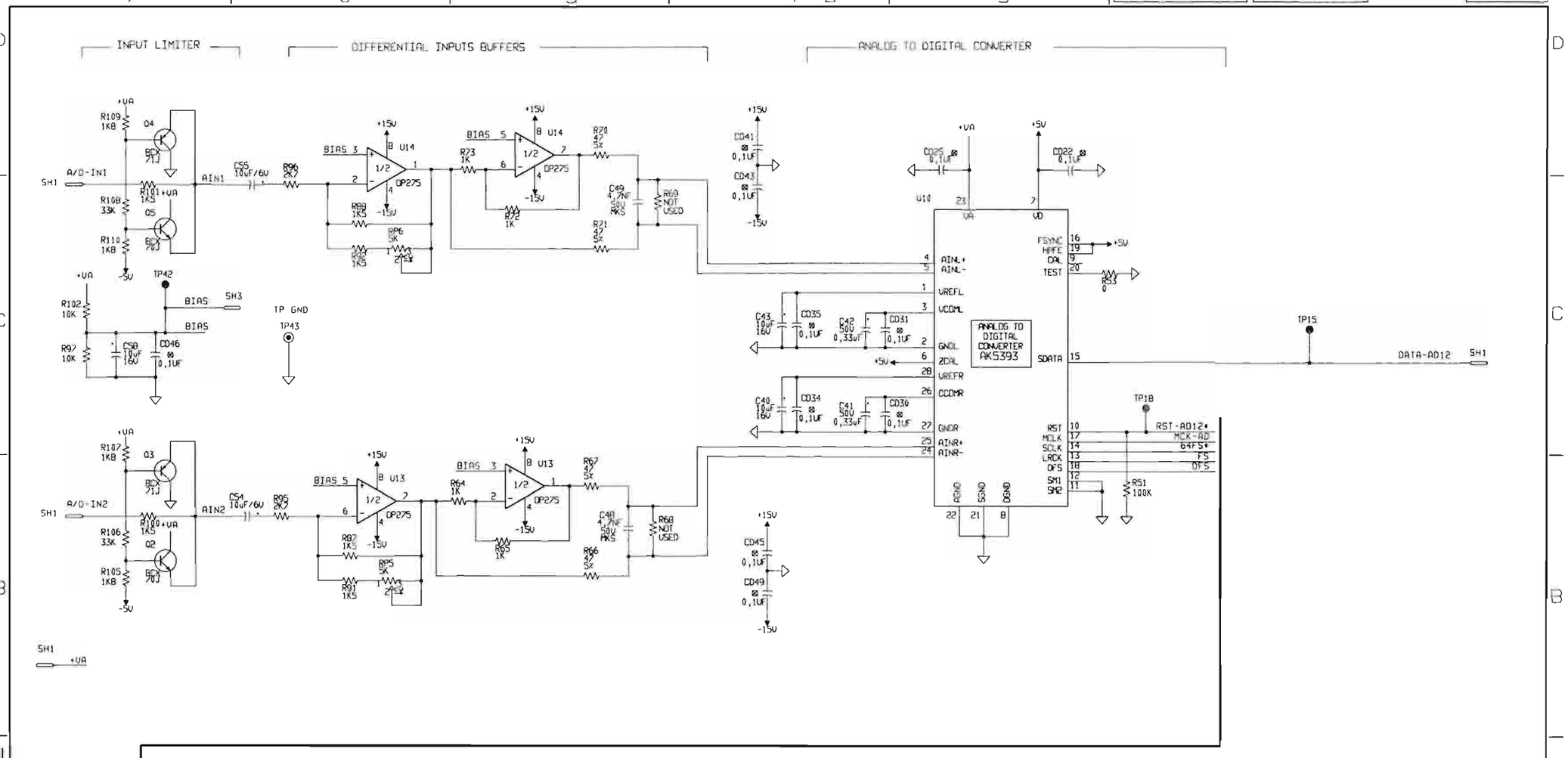

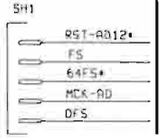

NAGRA

NAGRA	DIGITAL TAPE RECORDER NAGRA D AD/DA CONVERTER 24 BITS INPUTS & AD CONVERTER CH1-2 SCHEMATIC
	0910327000 [B]LEVO
	RELEASE: 01-11-99 SCALE: ~ SHEET: 2/5

This drawing is confidential and may not be divulged in whole or in part to a third party

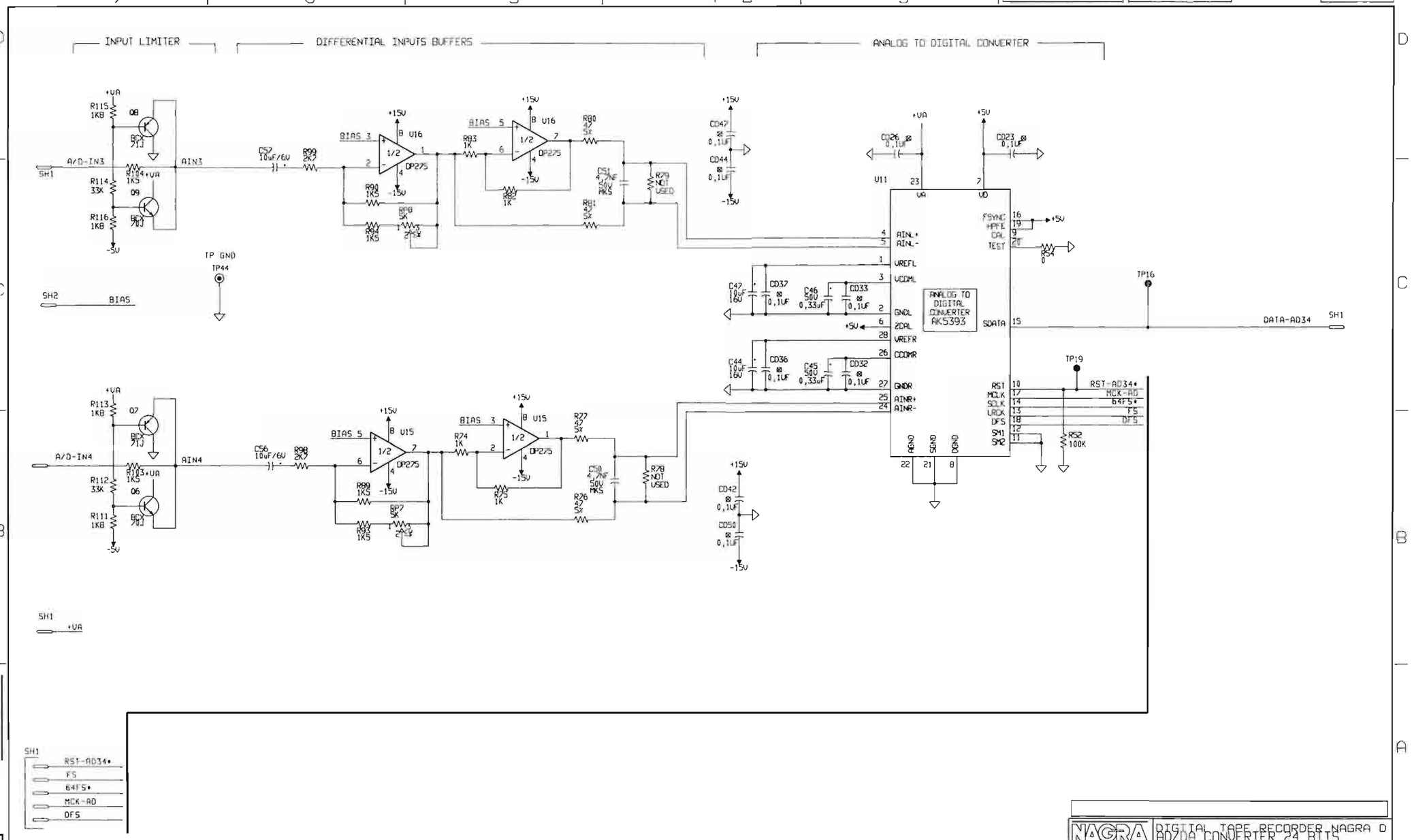

NAGRA

NAGRA	DIGITAL TAPE RECORDER NAGRA D AD/DA CONVERTER 24 BITS INPUTS & AD CONVERTER CH 3-4 SCHEMATIC
	0910327000 [B]LEVO
	RELEASE: 01-11-99 SCALE: ~ SHEET: 3/5

This drawing is confidential and may not be divulged in whole or in part to a third party

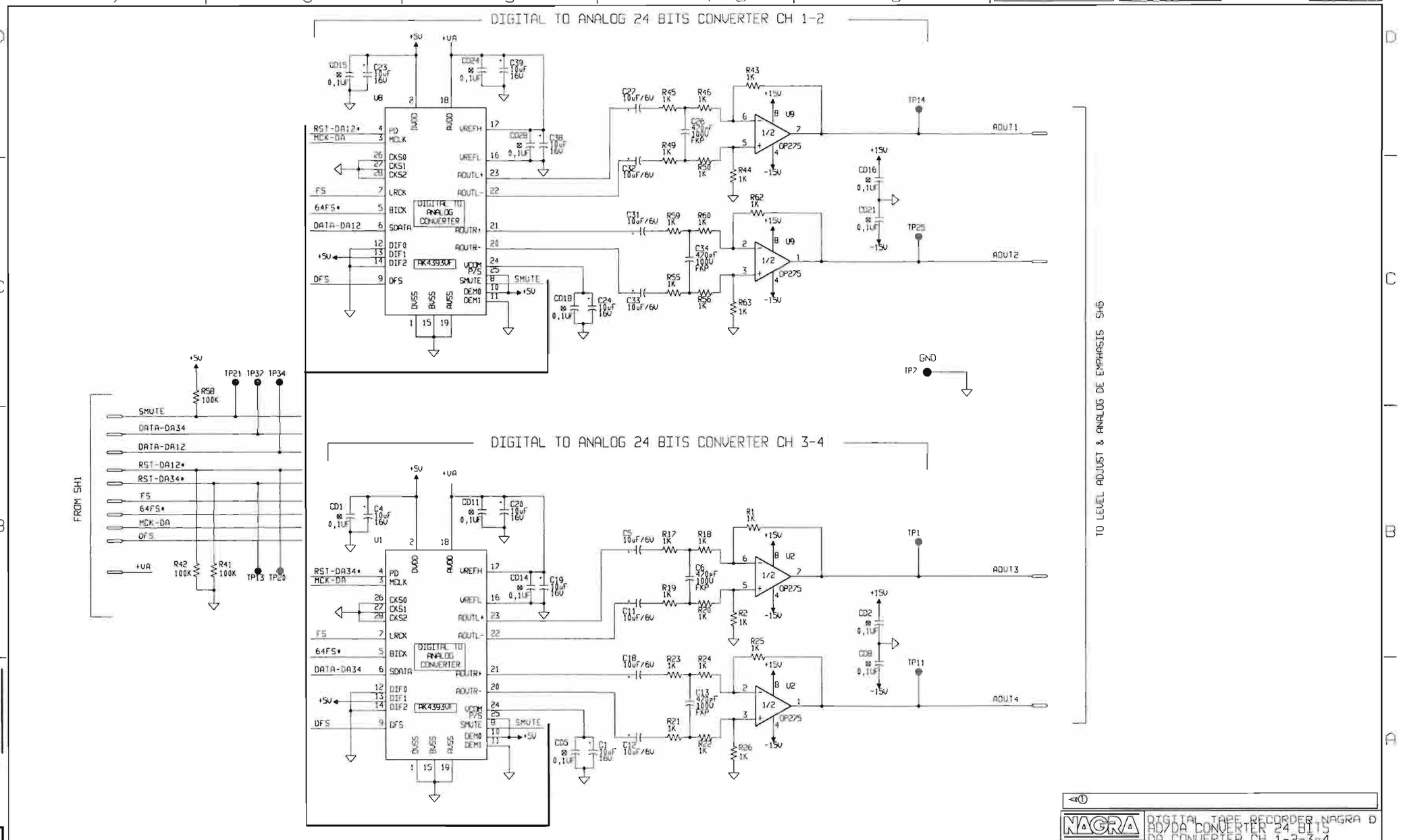

NAGRA

DIGITAL TAPE RECORDER NAGRA D
AD/DA CONVERTER 24 BITS
DA CONVERTER CH 1-2-3-4
SCHEMATIC

0910327000 | [B] LEV 0

RELEASE: 01-11-99 | SCALE: ~ | SHEET: 4/5

This drawing is confidential and may not be divulged in whole or in part to a third party

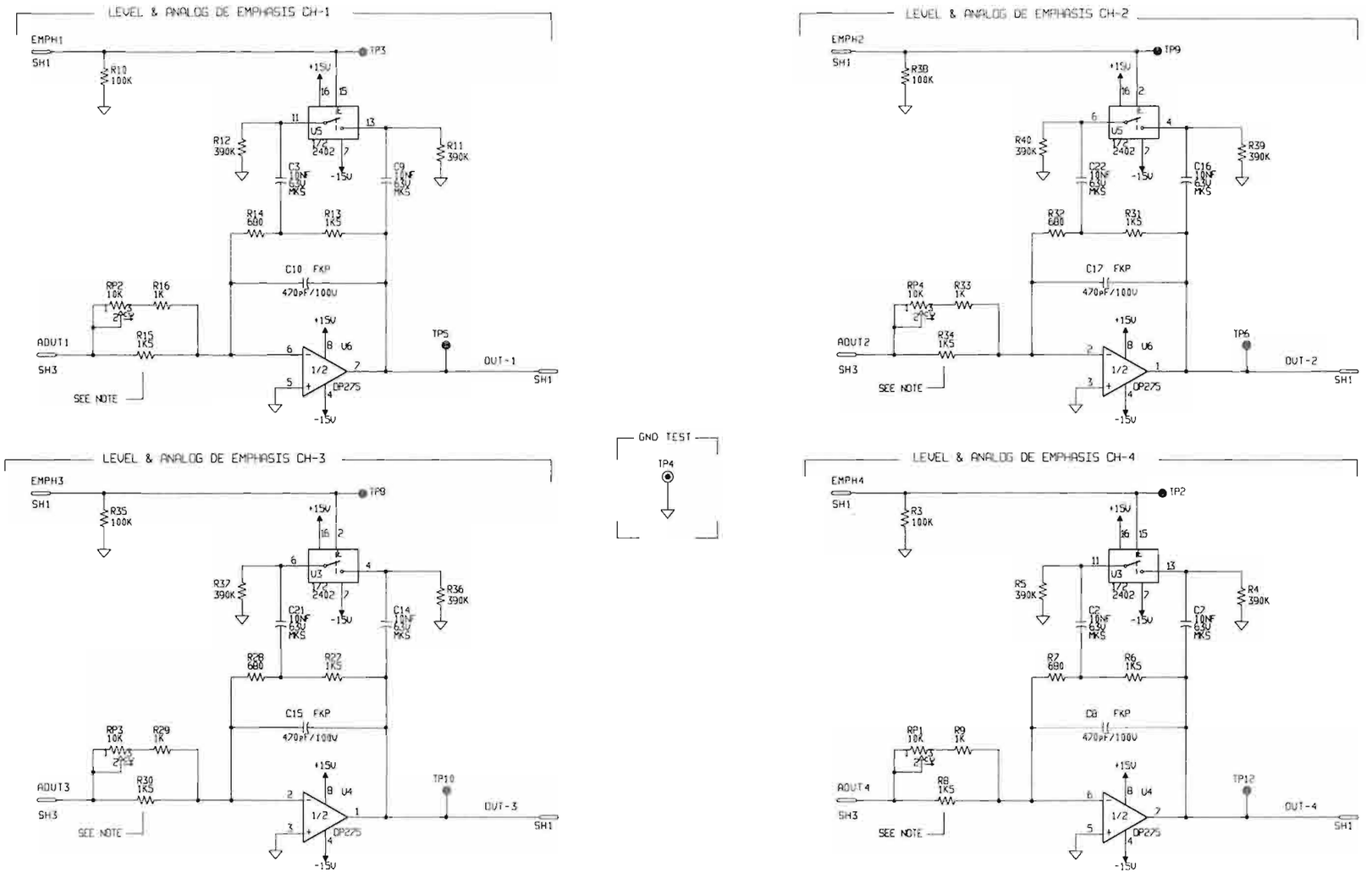

NOTE:
OUTPUTS LEVEL
LEVEL 3.1V RMS R=1K5
LEVEL 4.4V RMS R=1K

NAGRA	DIGITAL TAPE RECORDER NAGRA D AD/DA CONVERTER 24 BITS LEVEL ADJUST & ANALOG DE EMPH. SCHEMATIC
	0910327000 [B]LEV0
RELEASE: 01-11-99	SCALE: ~ SHEET: 5/5

This drawing is confidential and may not be divulged in whole or in part to a third party

9110327000 [B] LEV 0 SH 1/1

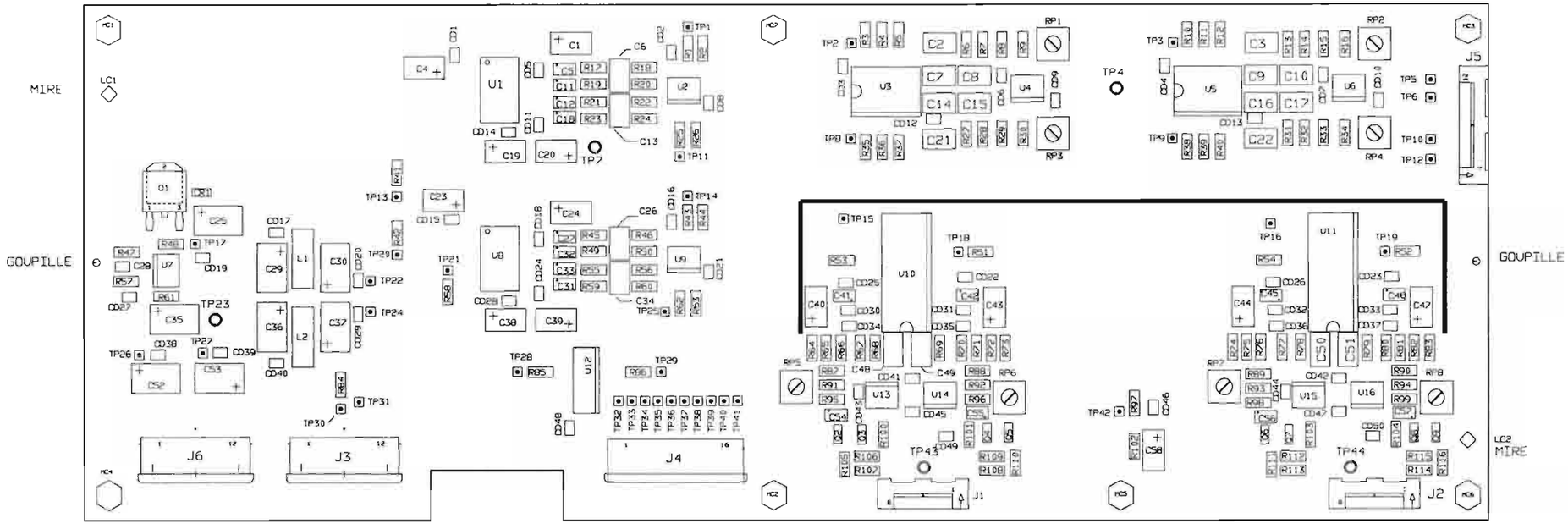

A- SOUDER LE BLINDAGE SUR LES PLAGES DE MASSE DEMASQUEES
OPTION NON MONTEE

B- ARASER LES SOUDURES TRAVERSANTES A 0,5mm

C- LC1,LC2 MIRES OPTIQUES DE POSE

WARNING: HANDLE ONLY AT STATIC SAFE WORK STATION
ATTENTION: MANIPULATION UNIQUEMENT AUTORISEE SUR POSTE DE TRAVAIL PROTEGE
ACHTUNG: HANDHABUNG DAHER NUR AN GESCHÜTZTEN ARBEITSPLÄTZEN ERLAUBT

NAGRA	AUDIO DIVISION	KUDELSKI SA CH-1033 CHESEAUX SWITZERLAND
DRAWN BY: JC DATE: 20-05-99	DIGITAL TAPE RECORDER NAGRA D AD/DA CONVERTER (24 BIT)	
CHECKED BY: DATE:	PRINTED-WIRING ASSEMBLY	
	9110327000	[B] LEV 0
	RELEASE: 05-11-99 SCALE: ~	SHEET: 1/1

This drawing is confidential and may not be divulged in whole or in part to a third party

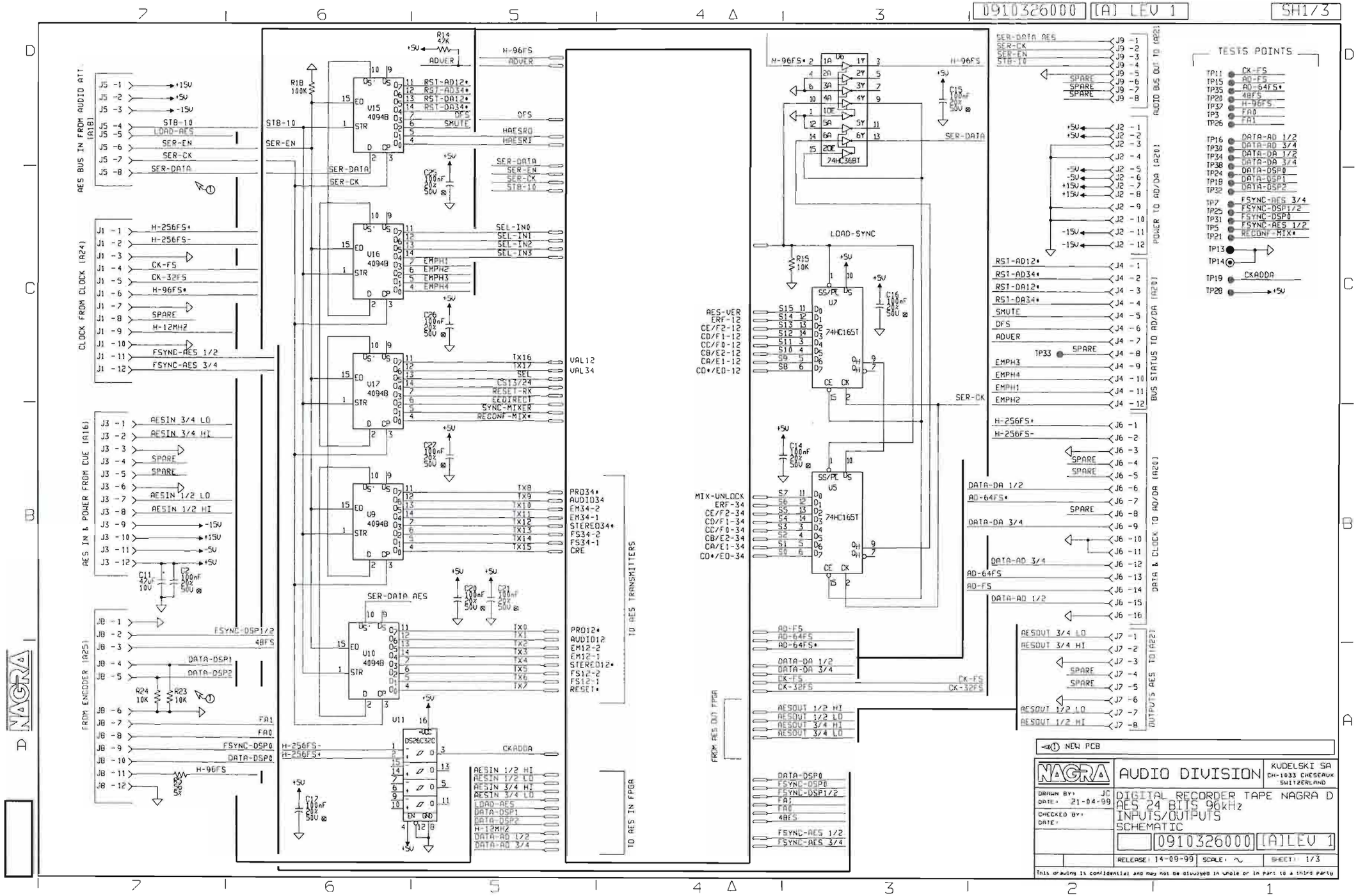
0910326000 [A] LEV 1
SH1/3
AES BUS IN FROM AUDIO ATT. (A18)
CLOCK FROM CLOCK (A24)
AES IN & POWER FROM CUE (A16)
FROM ENCODER (A25)
V15 4094B
V16 4094B
V17 4094B
V9 4094B
V10 4094B
V11 DS26C32C
U6 74HC36BT
U7 74HC165T
U5 74HC165T
TO AES TRANSMITTERS
TO AES IN FPGA
FROM AES OUT FPGA
AUDIO BUS OUT TO (A22)
POWER TO AD/DA (A20)
BUS STATUS TO AD/DA (A20)
DATA & CLOCK TO AD/DA (A20)
OUTPUTS AES TO (A22)
TESTS POINTS
NEW PCB
NAGRA
AUDIO DIVISION
KUDELSKI SA
CH-1033 CHESEAUX
SWITZERLAND
DRAWN BY: JC
DATE: 21-04-99
CHECKED BY:
DATE:
DIGITAL RECORDER TAPE NAGRA D
AES 24 BITS 96kHz
INPUTS/OUTPUTS
SCHEMATIC
0910326000 [A] LEV 1
RELEASE: 14-09-99
SCALE: ~
SHEET: 1/3
This drawing is confidential and may not be divulged in whole or in part to a third party

FPGA AES INPUTS

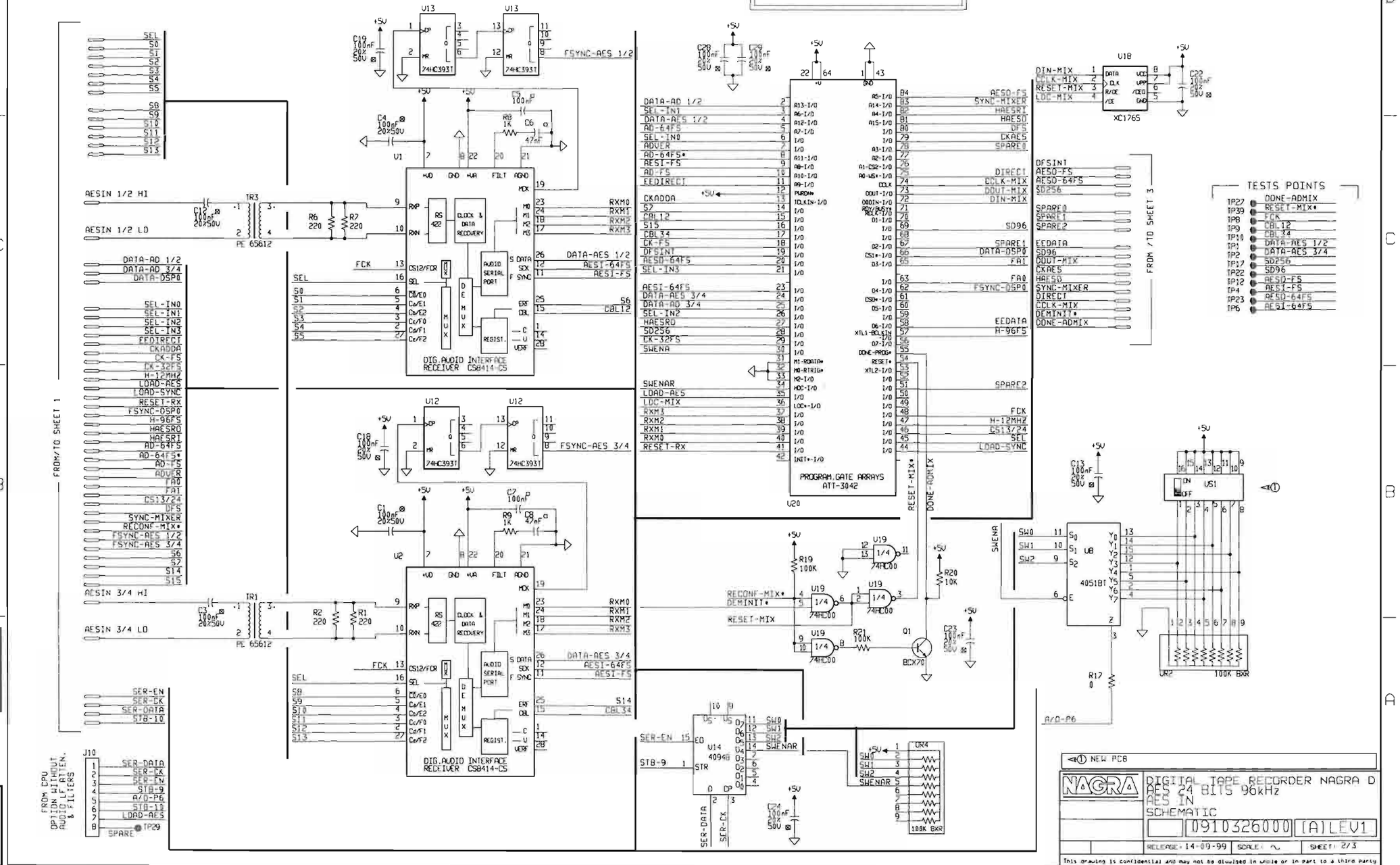

FPGA AES OUTPUTS

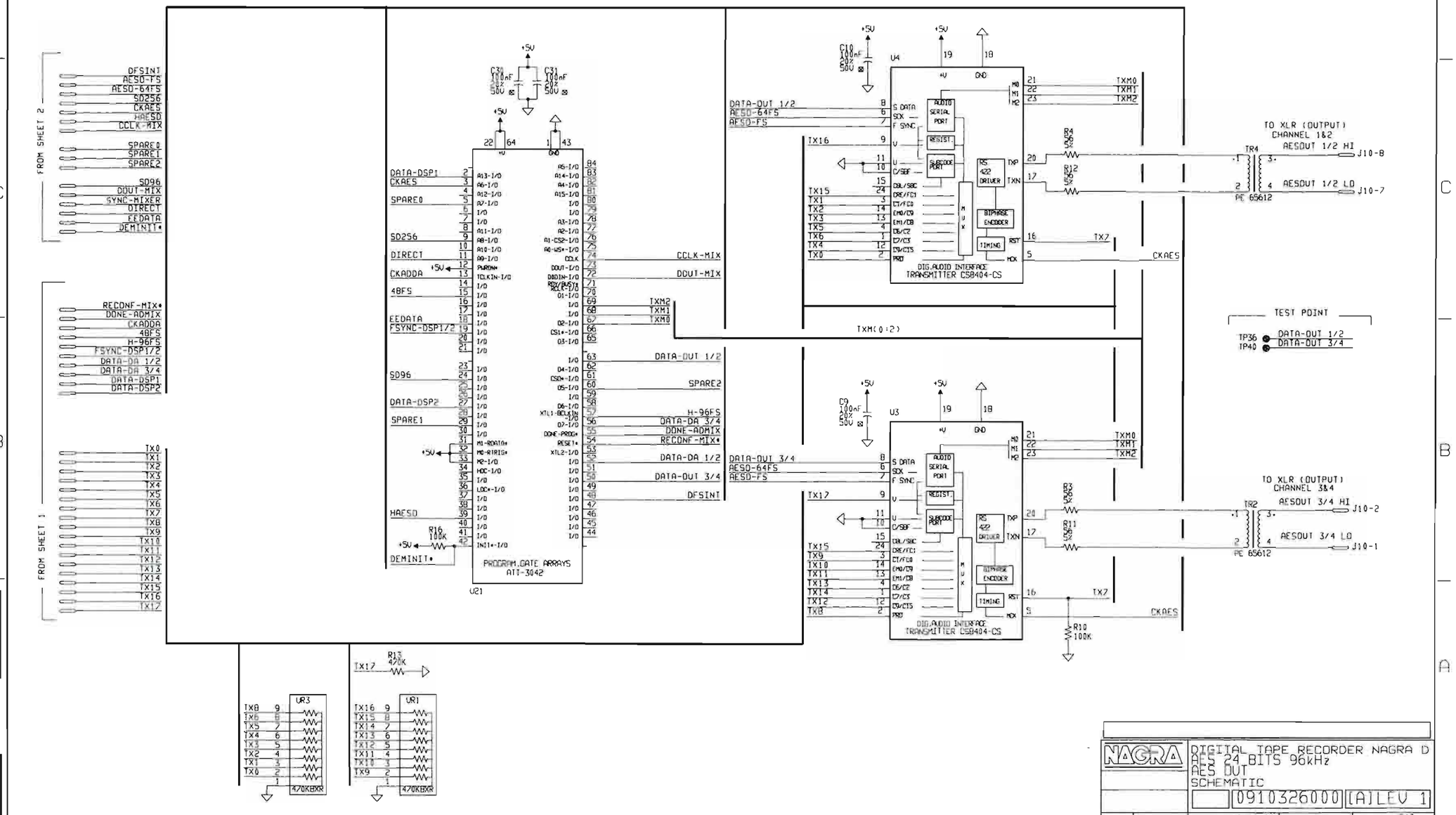

NAGRA

DIGITAL TAPE RECORDER NAGRA D
AES 24 BITS 96kHz
AES OUT
SCHEMATIC

0910326000 [A] LEV 1

RELEASE: 10-08-99 SCALE: ~ SHEET: 3/3

This drawing is confidential and may not be divulged in whole or in part to a third party

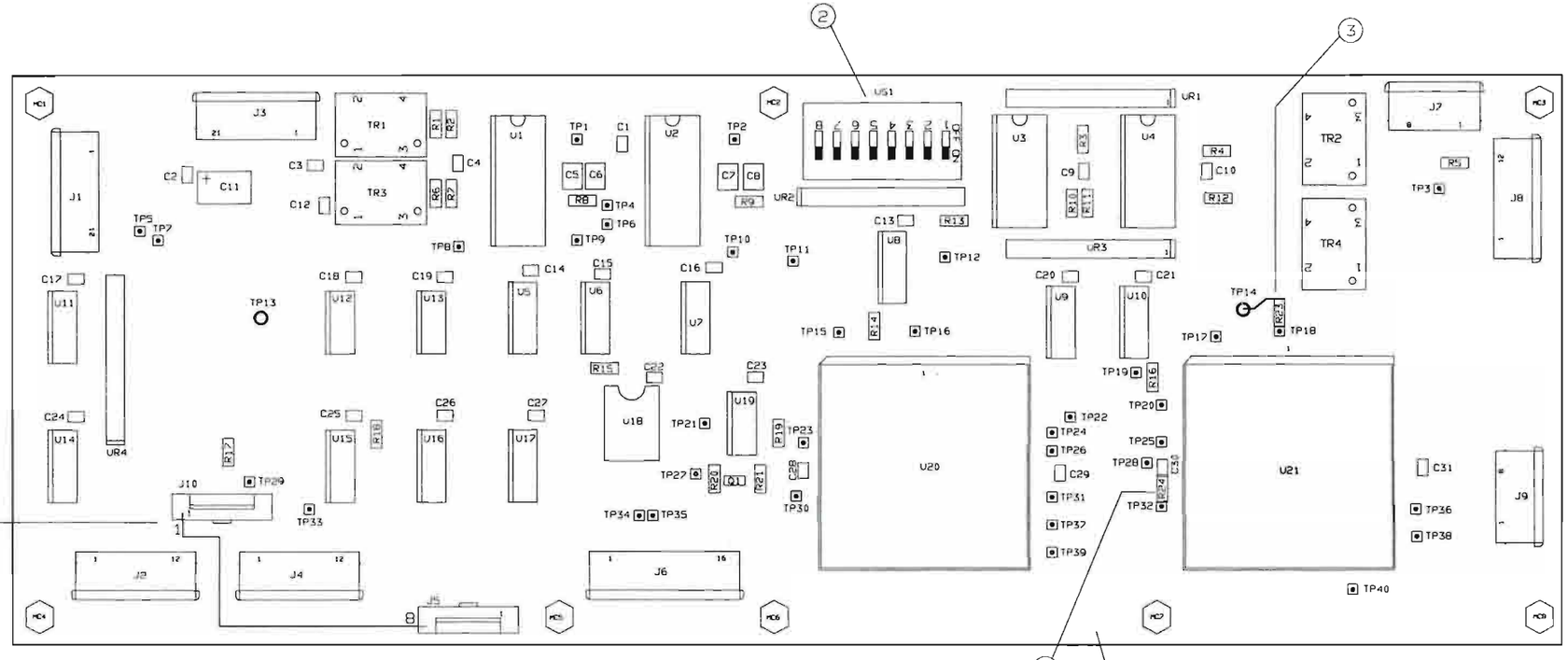

MODIFICATION SUR CIRCUIT [A] LEV 0 > LEV 1

1- FAIRE LIAISON COTE OPPOSE AUX SMD ENTRE J5-8 ET J10-1

2- ATTENTION AU SENS DE US1

3- SOUDER RESISTANCES R23,R24 (10K) 5460210020 ENTRE TP32-C30 TP18-TP14 AJOUTER UN FIL DE LIAISON

4- MODIFIER LE LEV: 1

WARNING: HANDLE ONLY AT STATIC SAFE WORK STATION
ATTENTION: MANIPULATION UNIQUEMENT AUTORISÉE SUR POSTE DE TRAVAIL PROTEGE
ACHTUNG: HANDHABUNG DAHER NUR AN GESCHÜTZTEN ARBEITSPLÄTZEN ERLAUBT

NAGRA	AUDIO DIVISION	KUDELSKI SA CH-1033 CHESEAUX SWITZERLAND
DRAWN BY: JC DATE: 21-05-99	DIGITAL TAPE RECORDER NAGRA D AES IN/OUT & AO MIXER 24 BIT 96kHz	
CHECKED BY: DATE:	PRINTED-WIRING ASSEMBLY	
	9110326000	[A]LEV0>1
	RELEASE: 14-09-99 SCALE: ~	SHEET: 1/1

This drawing is confidential and may not be divulged in whole or in part to a third party

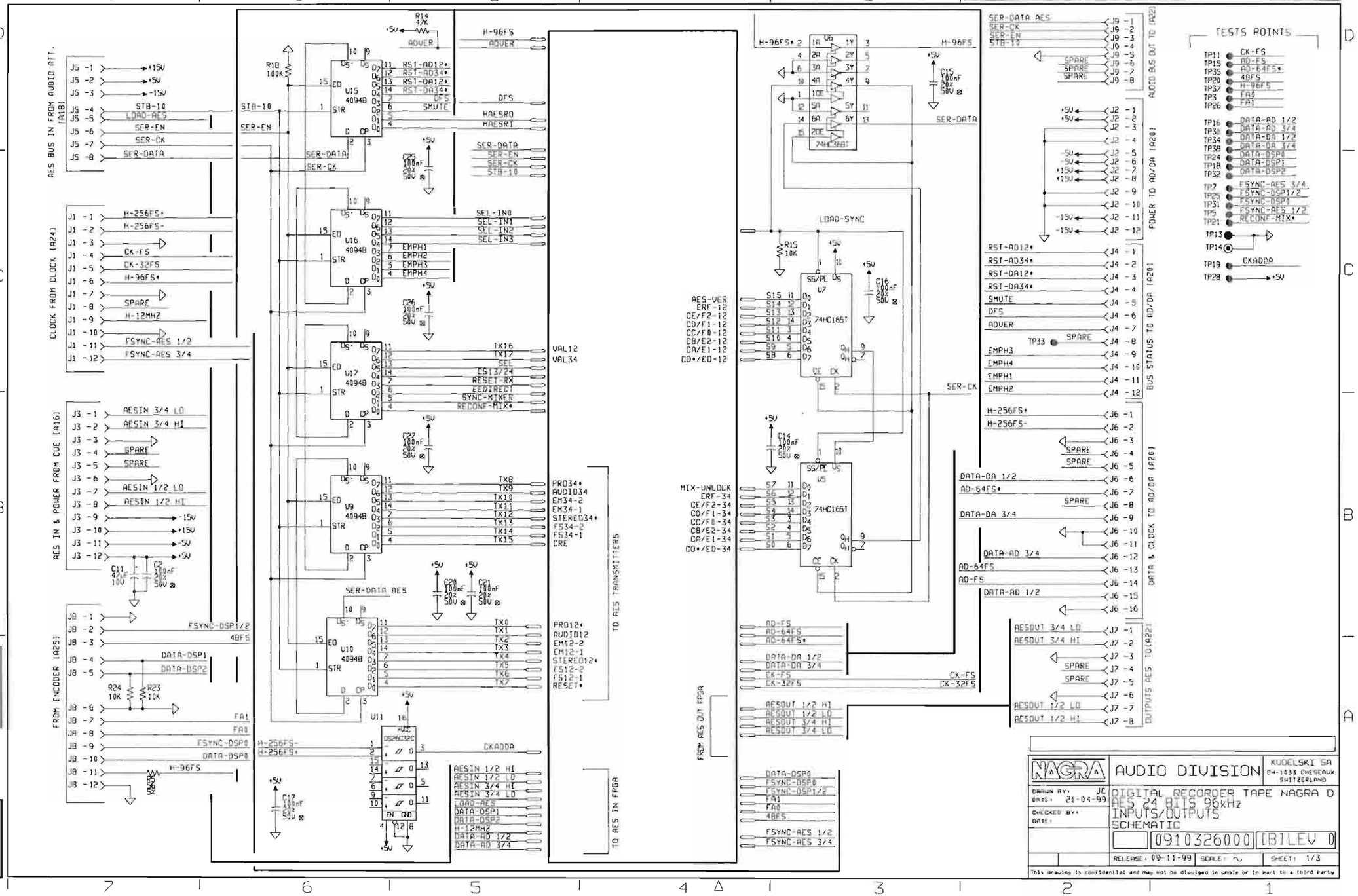
0910326000 [B] LEV 0
SH1/3
AES BUS IN FROM AUDIO ATT. [A18]
CLOCK FROM CLOCK [A24]
AES IN & POWER FROM CUE [A16]
FROM ENCODER [A25]
U15 4094B
U16 4094B
U17 4094B
U9 4094B
U10 4094B
U11 DS26C32C
U7 74HC165T
U5 74HC165T
74HC368T
TO AES TRANSMITTERS
TO AES IN FPGA
FROM AES OUT FPGA
AUDIO BUS OUT TO [A22]
POWER TO AD/DA [A20]
BUS STATUS TO AD/DA [A20]
DATA & CLOCK TO AD/DA [A20]
OUTPUTS AES TO [A22]
TESTS POINTS
NAGRA
AUDIO DIVISION
KUDELSKI SA
CH-1033 CHESEAUX
SWITZERLAND
DRAWN BY: JC
DATE: 21-04-99
CHECKED BY:
DATE:
DIGITAL RECORDER TAPE NAGRA D
AES 24 BITS 96kHz
INPUTS/OUTPUTS
SCHEMATIC
0910326000 [B] LEV 0
RELEASE: 09-11-99
SCALE: ~
SHEET: 1/3
This drawing is confidential and may not be divulged in whole or in part to a third party

FPGA AES INPUTS

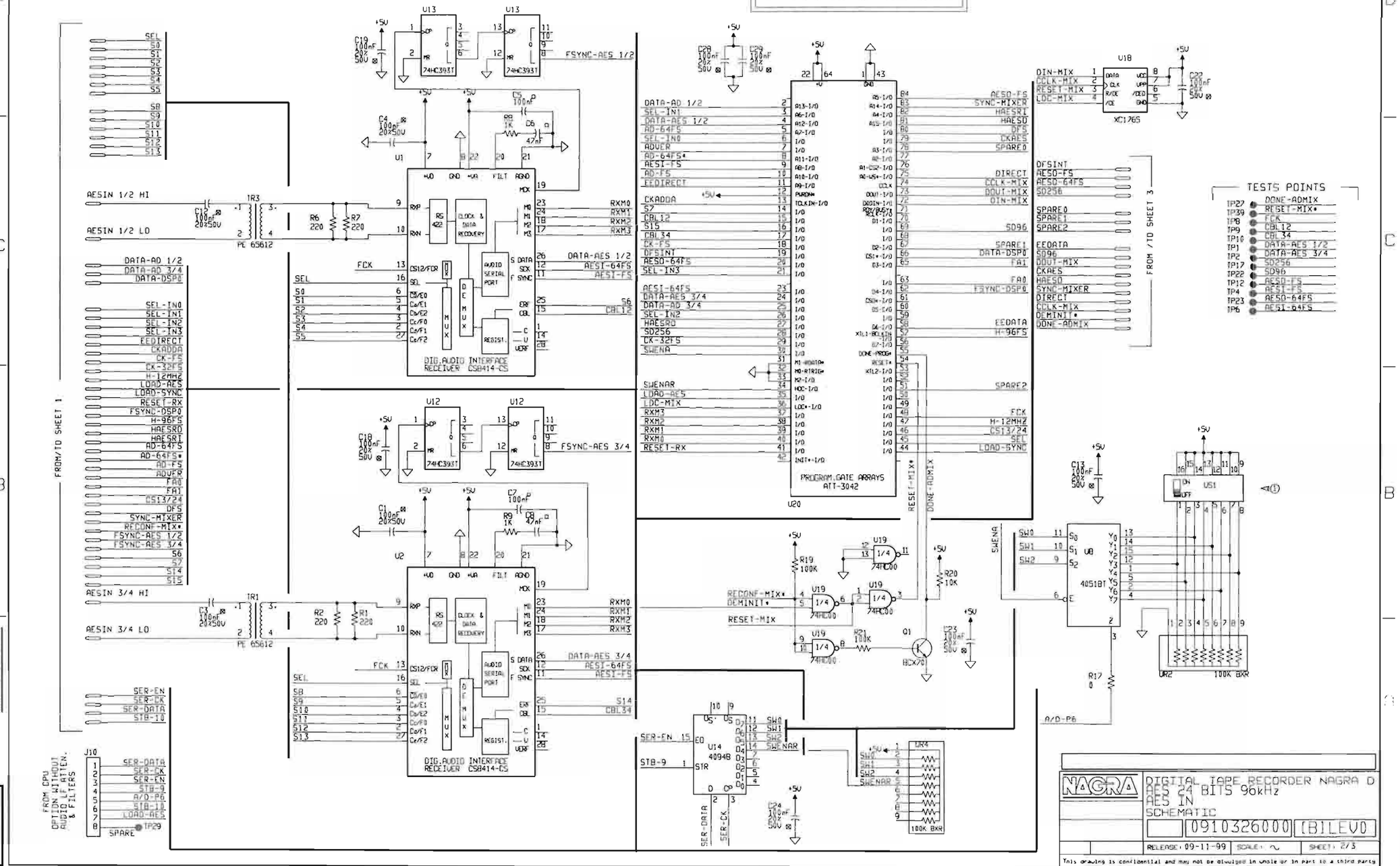

FPGA AES OUTPUTS

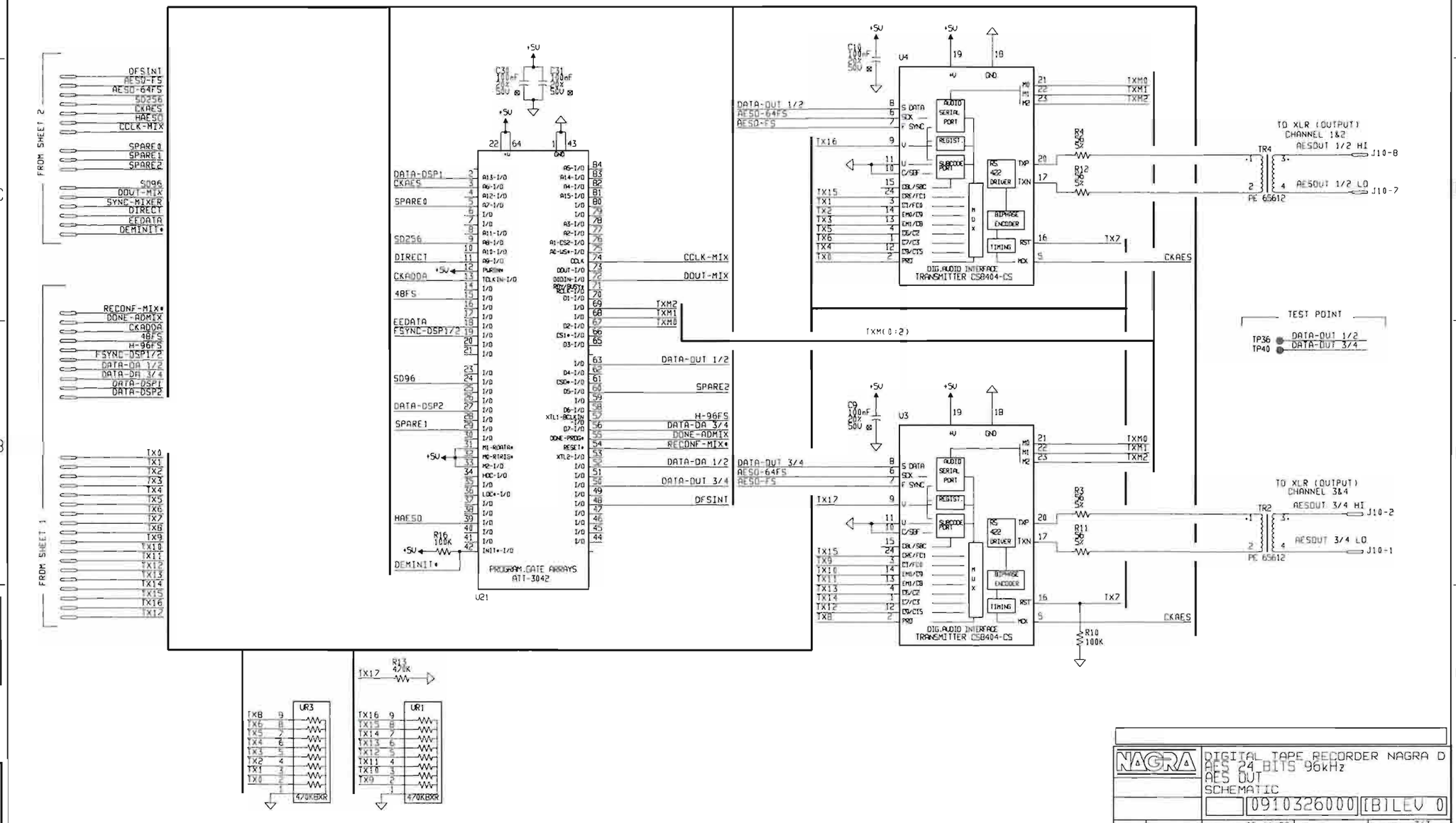

NAGRA

DIGITAL TAPE RECORDER NAGRA D
AES 24 BITS 96kHz
AES OUT
SCHEMATIC

0910326000 [B] LEV 0

RELEASE: 09-11-99 | SCALE: ~ | SHEET: 3/3

This drawing is confidential and may not be disclosed in whole or in part to a third party

9110316100[A] 1/1

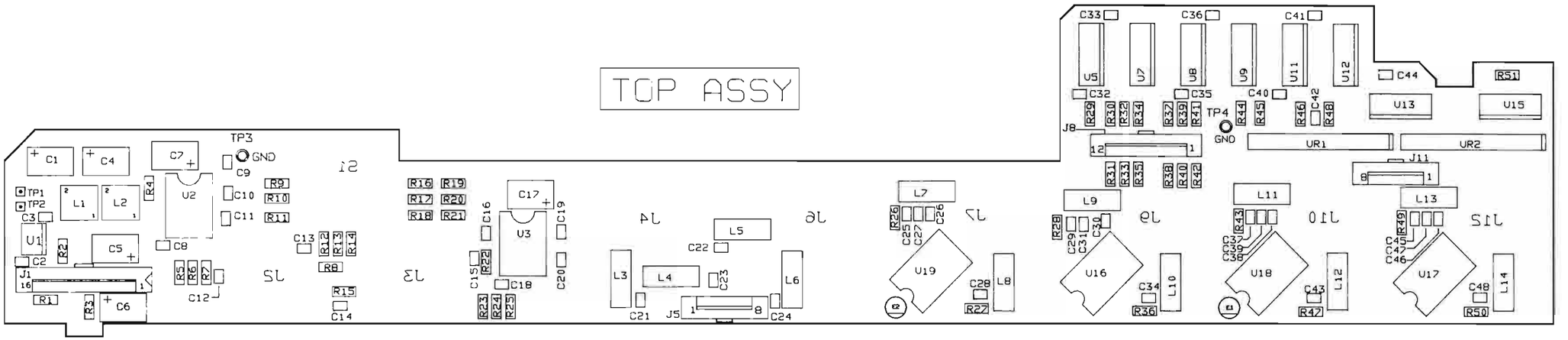

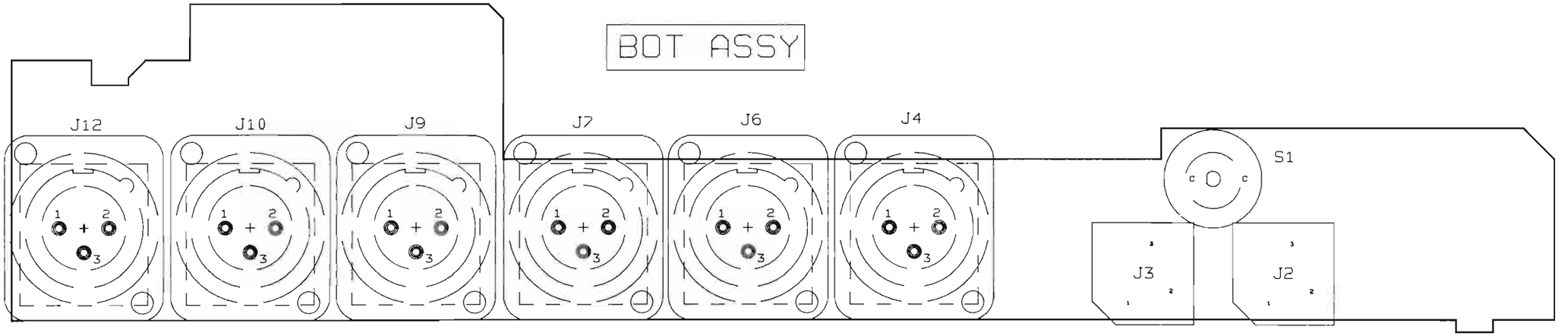

WARNING: HANDLE ONLY AT STATIC SAFE WORK STATION
ATTENTION: MANIPULATION UNIQUEMENT AUTORISEE SUR POSTE DE TRAVAIL PROTEGE
ACHTUNG: HANDHABUNG DAHER NUR AN GESCHÜTZTEN ARBEITSPLÄTZEN ERLAUBT

NAGRA	AUDIO DIVISION	KUDELSKI SA CH-1033 CHESEAUX SWITZERLAND
DRAW BY: JC DATE: 04-04-93	DIGITAL TAPE RECORDER NAGRA D	
CHECK BY: DATE:	AUDIO BF & PHONES OUTPUTS	
	PRINTED-WIRING ASSEMBLY	
	A22 9110316100	REV A
	RELEASE: 04-04-93 SCALE: ~	SHEET: 1/1

This drawing is confidential and may not be divulged in whole or in part to a third party

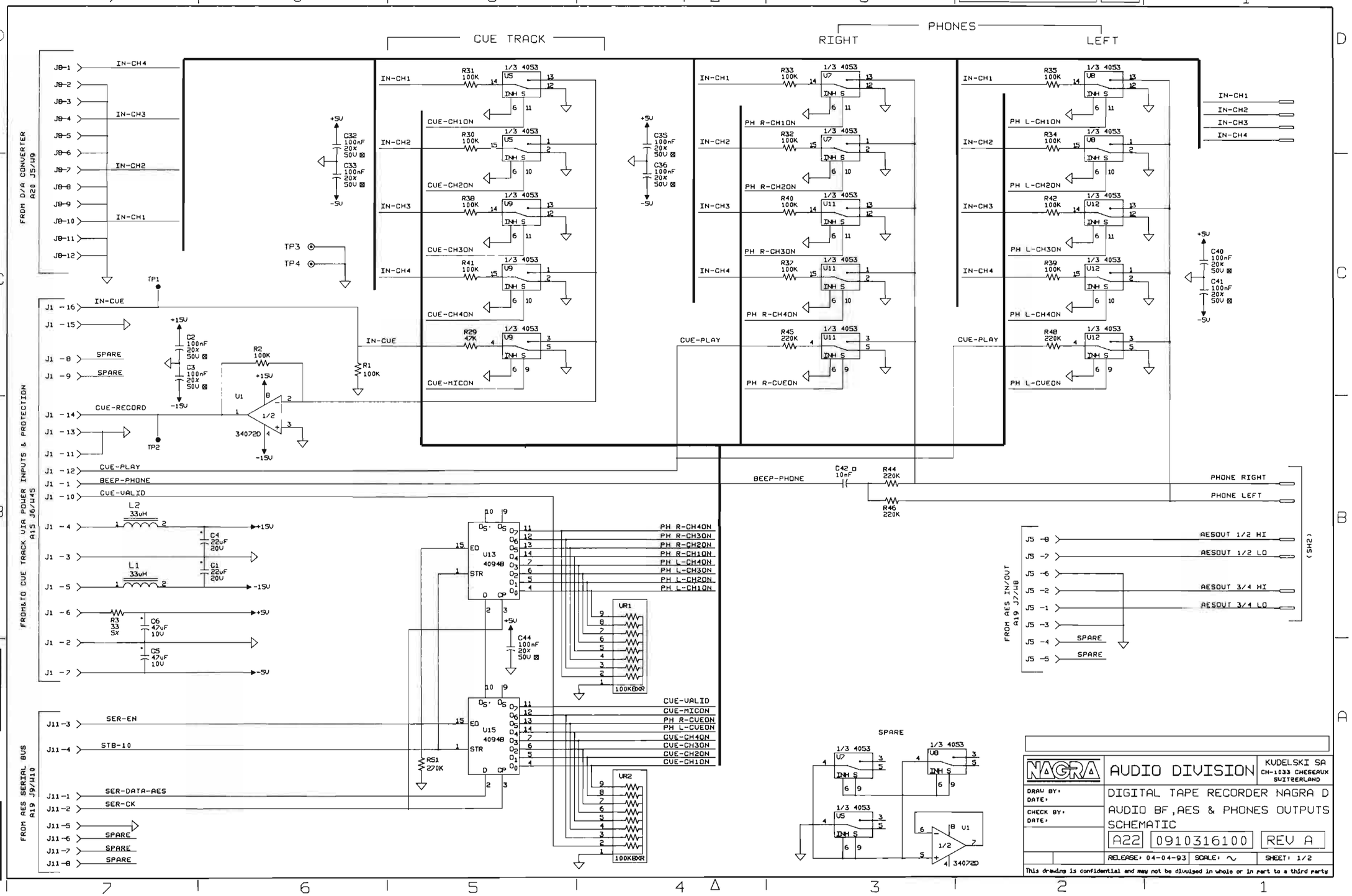
0910316100[A]
1/2
CUE TRACK
PHONES
RIGHT
LEFT
FROM D/A CONVERTER A20 J5/W9
FROM&TO CUE TRACK VIA POWER INPUTS & PROTECTION A15 J6/W45
FROM AES SERIAL BUS A19 J9/W10
FROM AES IN/OUT A19 J7/W8
IN-CH1
IN-CH2
IN-CH3
IN-CH4
CUE-CH1ON
CUE-CH2ON
CUE-CH3ON
CUE-CH4ON
CUE-MICON
PH R-CH1ON
PH R-CH2ON
PH R-CH3ON
PH R-CH4ON
PH R-CUEON
PH L-CH1ON
PH L-CH2ON
PH L-CH3ON
PH L-CH4ON
PH L-CUEON
IN-CUE
CUE-PLAY
CUE-RECORD
BEEP-PHONE
CUE-VALID
SPARE
SER-EN
STB-10
SER-DATA-AES
SER-CK
PHONE RIGHT
PHONE LEFT
AESOUT 1/2 HI
AESOUT 1/2 LO
AESOUT 3/4 HI
AESOUT 3/4 LO
(SH2)
NAGRA
AUDIO DIVISION
KUDELSKI SA
CH-1033 CHESEAUX
SWITZERLAND
DRAW BY:
DATE:
CHECK BY:
DATE:
DIGITAL TAPE RECORDER NAGRA D
AUDIO BF,AES & PHONES OUTPUTS
SCHEMATIC
A22
0910316100
REV A
RELEASE: 04-04-93
SCALE: ~
SHEET: 1/2
This drawing is confidential and may not be divulged in whole or in part to a third party

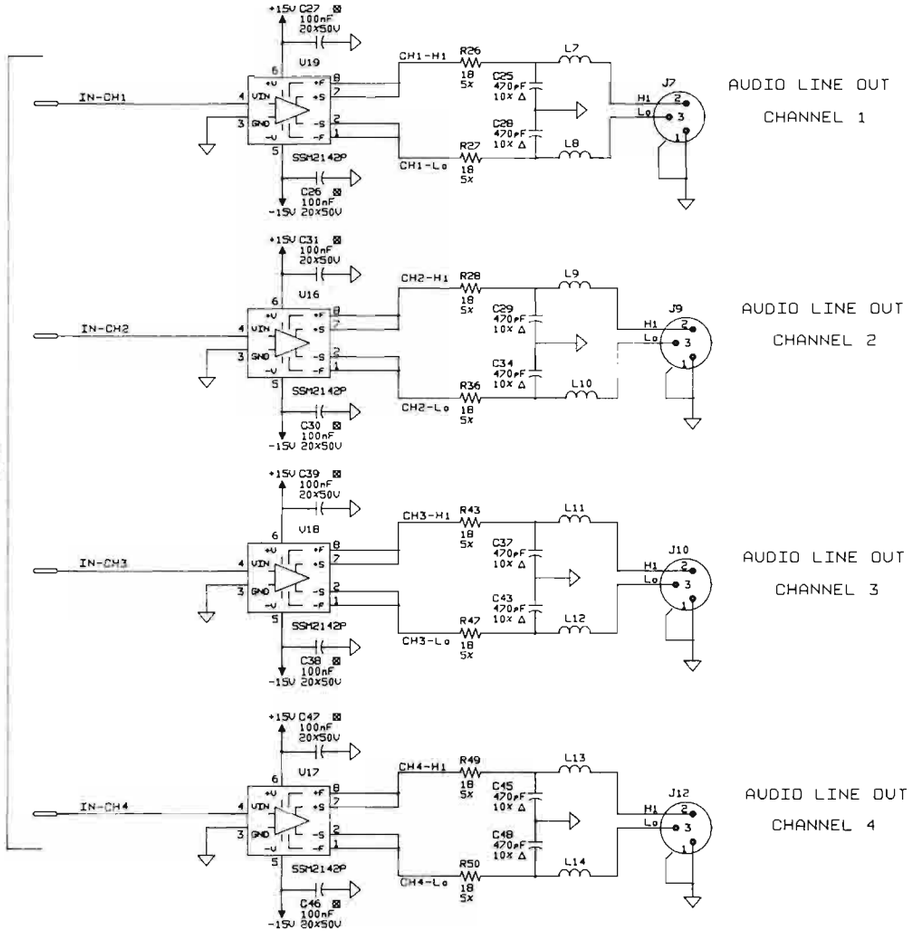

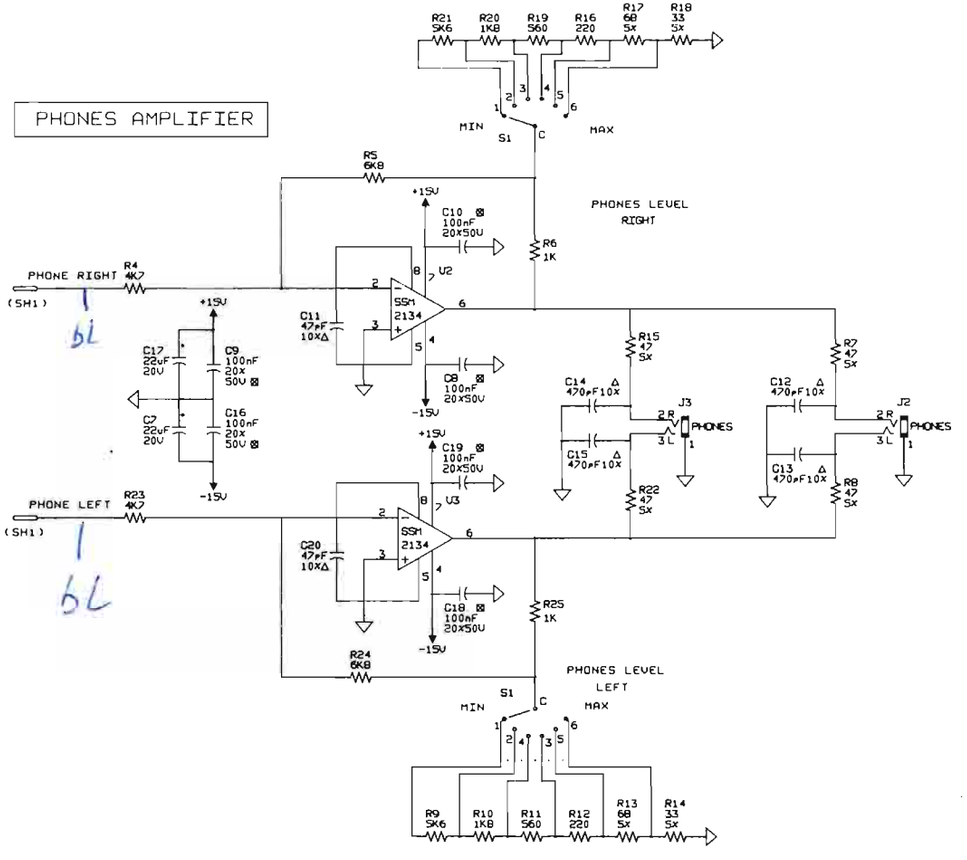

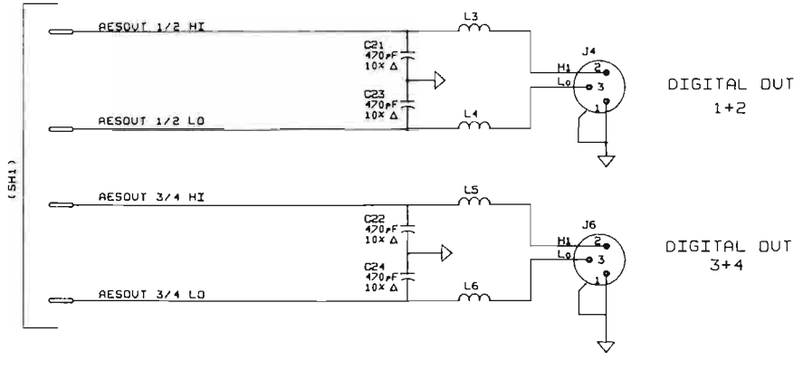

NAGRA

DIGITAL TAPE RECORDER NAGRA D
AUDIO BF, AES & PHONES OUTPUT
SCHEMATIC

A22 | 0910316100 | REV A

RELEASE: 04-04-93 | SCALE: ~ | SHEET: 2/2

This drawing is confidential and may not be divulged in whole or in part to a third party

COMPOSANTS SMD MONTES SUR LA FACE OPPOSEE SERIGRAPHIEE

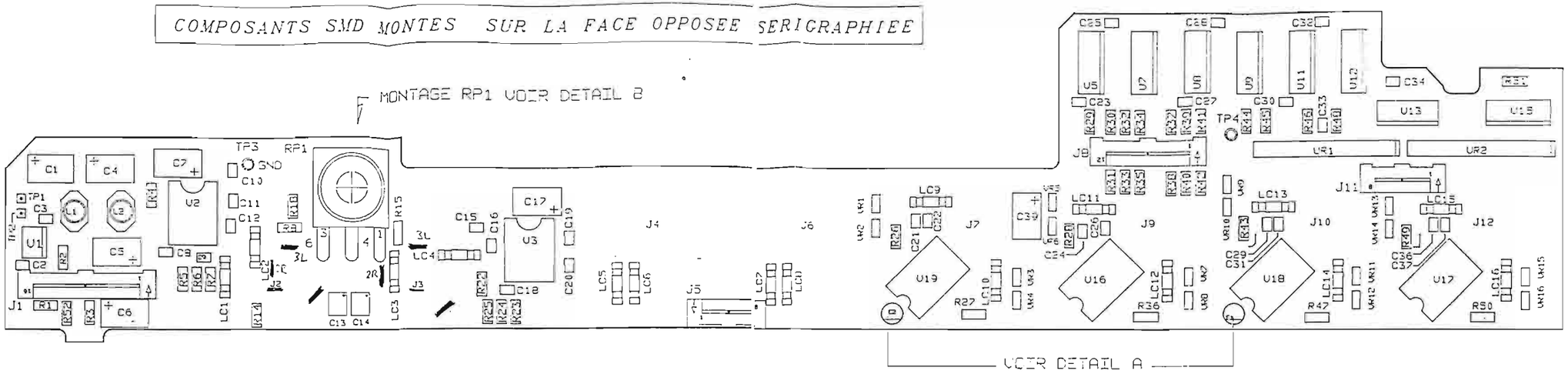

COMPOSANTS MONTES EN REPRISE SUR LA FACE OPPOSEE AUX SMD

SOUDER J2,J3,J4,J6,J7,J9,J10,J12 AVEC UN GABARIT
ET CONTROLLER L'ALIGNEMENT

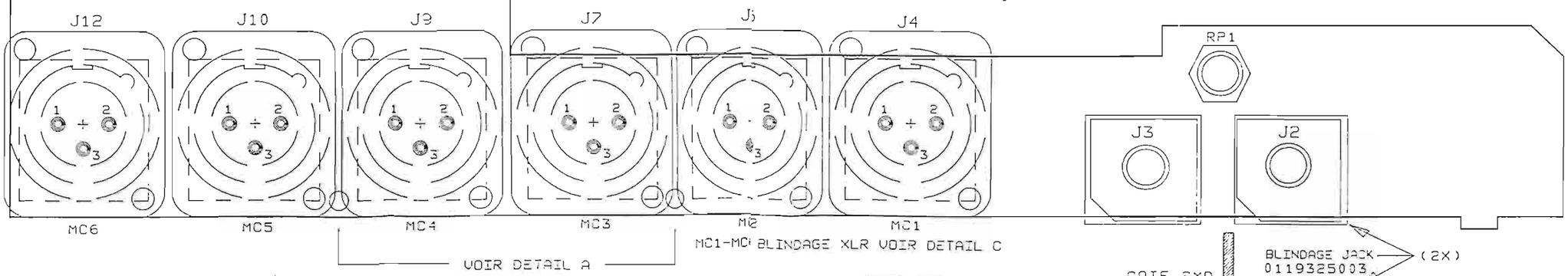

DETAIL A

CI 2101316201(C)

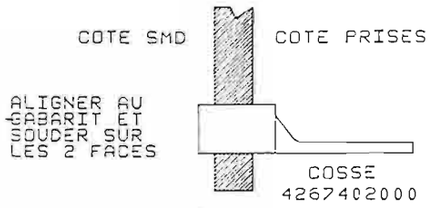

DETAIL B

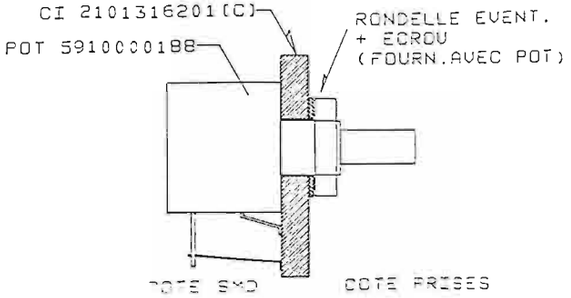

DETAIL C

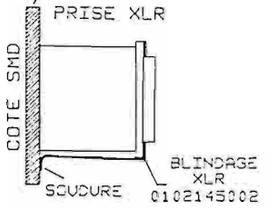

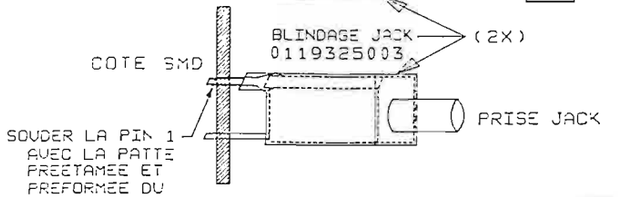

WARNING: HANDLE ONLY AT STATIC SAFE WORK STATION
ATTENTION: MANIPULATION UNIQUEMENT AUTORISEE SUR POSTE DE TRAVAIL PROTEGE
ACHTUNG: HANDHABUNG DARFER NUR AN GESCHÜTZTEN ARBEITSPLÄTZEN ERLAUBT

NAGRA	AUDIO DIVISION	KUDELSKI SA CH-1033 CHESEAUX SWITZERLAND
DRAW BY: JC DATE: 03-06-92	DIGITAL TAPE RECORDER NAGRA D	
CHECK BY: DATE:	AUDIO LF & PHONES OUTPUTS PRINTED-WIRING ASSEMBLY	
	A22 9110316200	REV(C)
	RELEASE: 19-11-97 SCALE: ~	SHEET: 1/1

6

June 1994

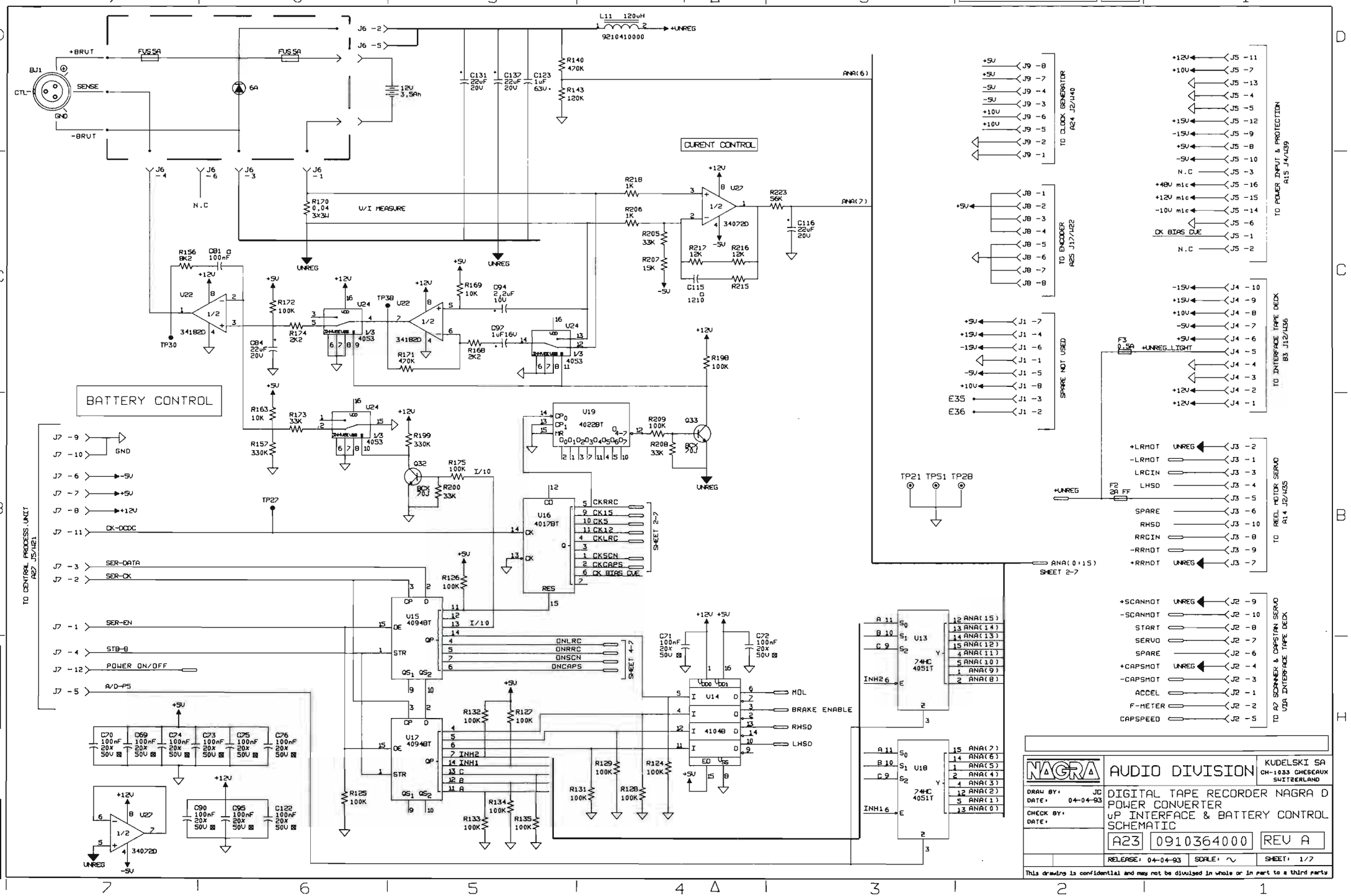
BATTERY CONTROL
CURENT CONTROL
V/I MEASURE
N.C
TO CENTRAL PROCESS.UNIT A27 J5/H21
TO CLOCK GENERATOR A24 J2/H40
TO ENCODER A25 J17/H22
SPARE NOT USED
TO POWER INPUT & PROTECTION A15 J4/H39
TO INTERFACE TAPE DECK B3 J12/H36
TO REEL MOTOR SERVO A14 J2/H35
TO A2 SCANNER & CAPSTAN SERVO VIA INTERFACE TAPE DECK
ANA(0:15) SHEET 2-7
AUDIO DIVISION
KUDELSKI SA CH-1033 CHESEAUX SWITZERLAND
DIGITAL TAPE RECORDER NAGRA D
POWER CONVERTER
uP INTERFACE & BATTERY CONTROL
SCHEMATIC
A23 0910364000 REV A
RELEASE: 04-04-93 SCALE: ~ SHEET: 1/7
This drawing is confidential and may not be divulged in whole or in part to a third party

DC/DC CONVERTER
+12V,-5V,+12V mic,+48V mic

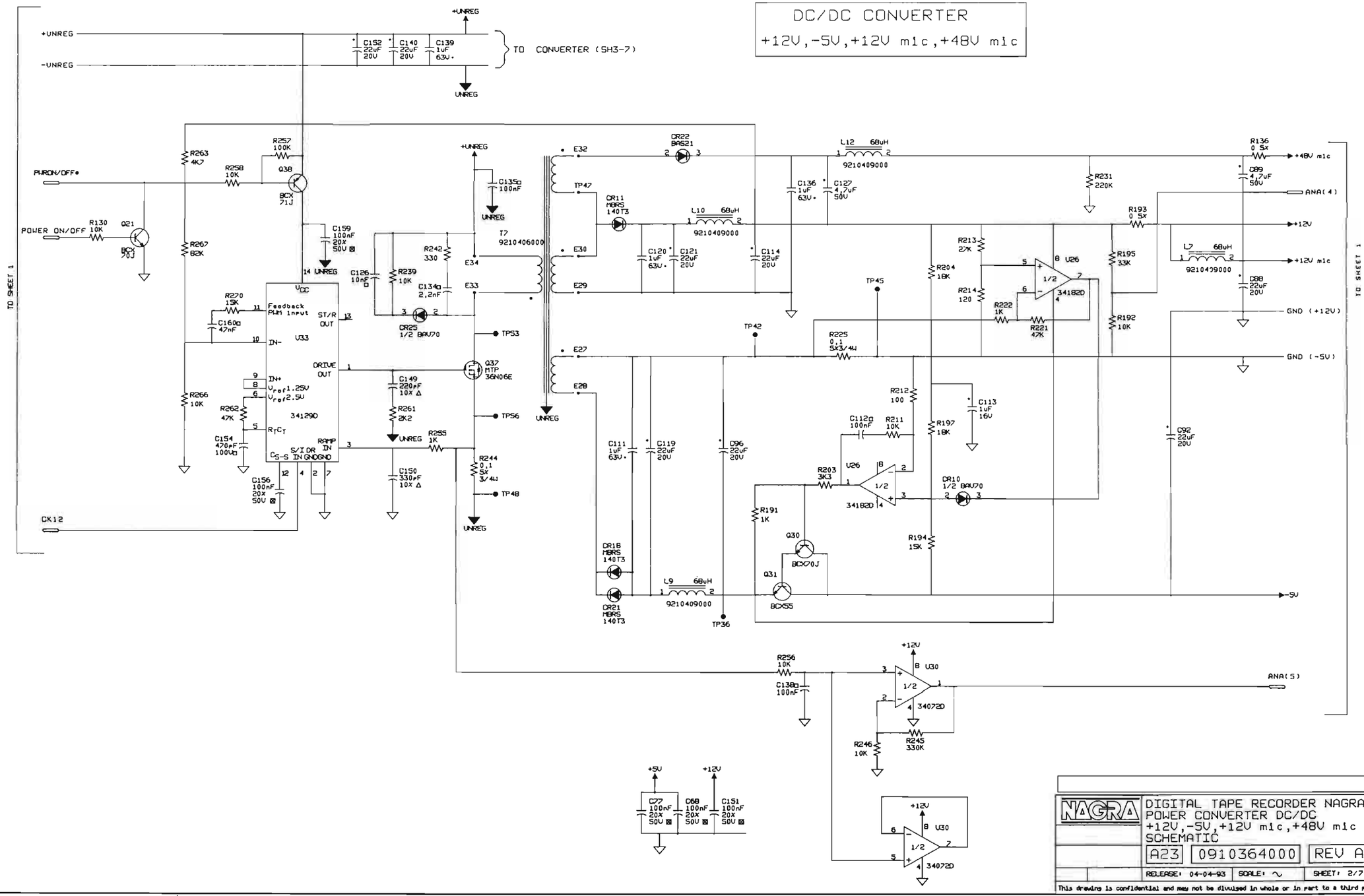

NAGRA

DIGITAL TAPE RECORDER NAGRA D
POWER CONVERTER DC/DC
+12V,-5V,+12V mic,+48V mic
SCHEMATIC

A23 | 0910364000 | REV A

RELEASE: 04-04-93 | SCALE: ~ | SHEET: 2/7

This drawing is confidential and may not be divulged in whole or in part to a third party

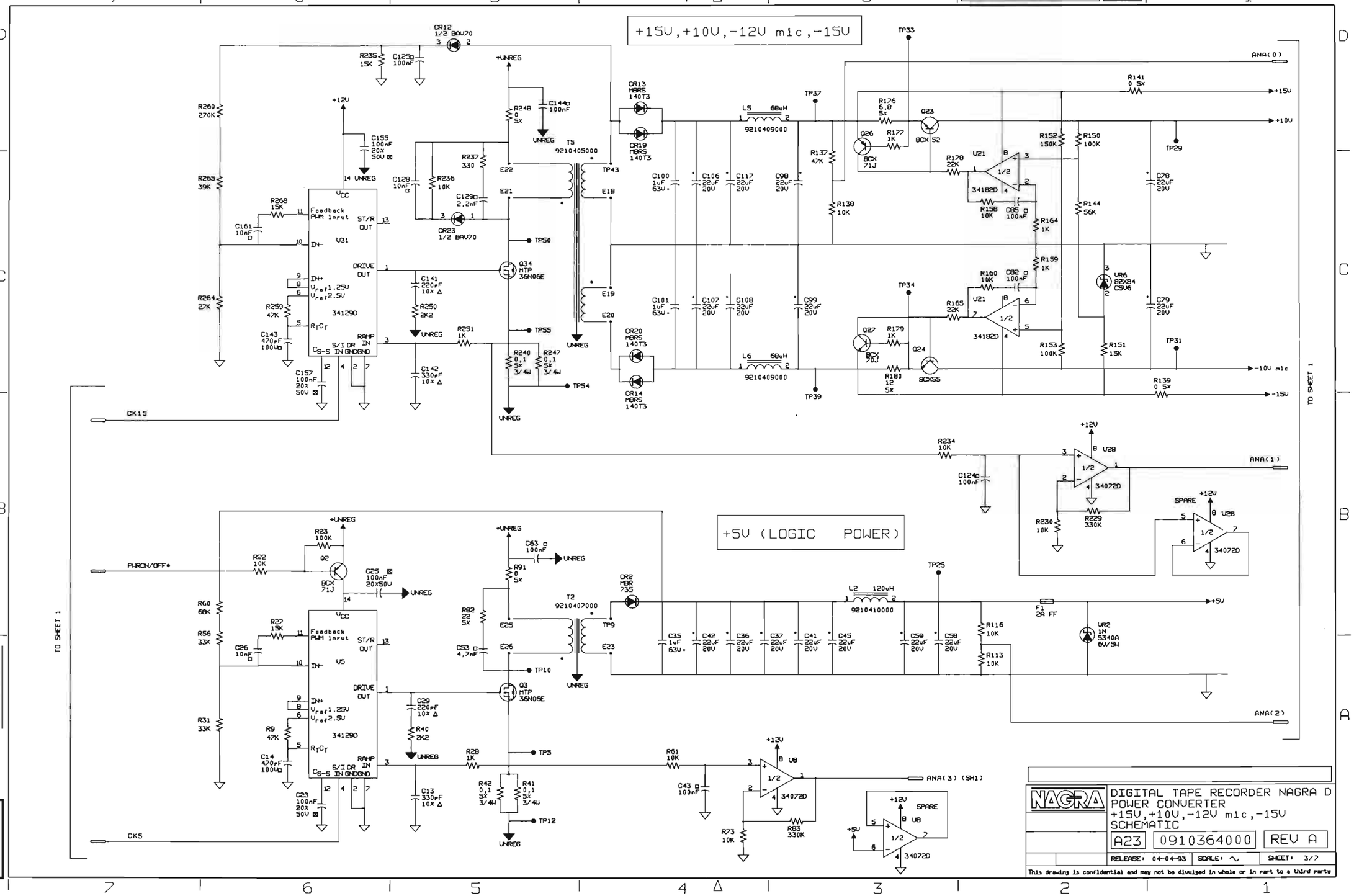

NAGRA

DIGITAL TAPE RECORDER NAGRA D
POWER CONVERTER
+15V,+10V,-12V mic,-15V
SCHEMATIC

A23 | 0910364000 | REV A

RELEASE: 04-04-93 | SCALE: ~ | SHEET: 3/7

This drawing is confidential and may not be divulged in whole or in part to a third party

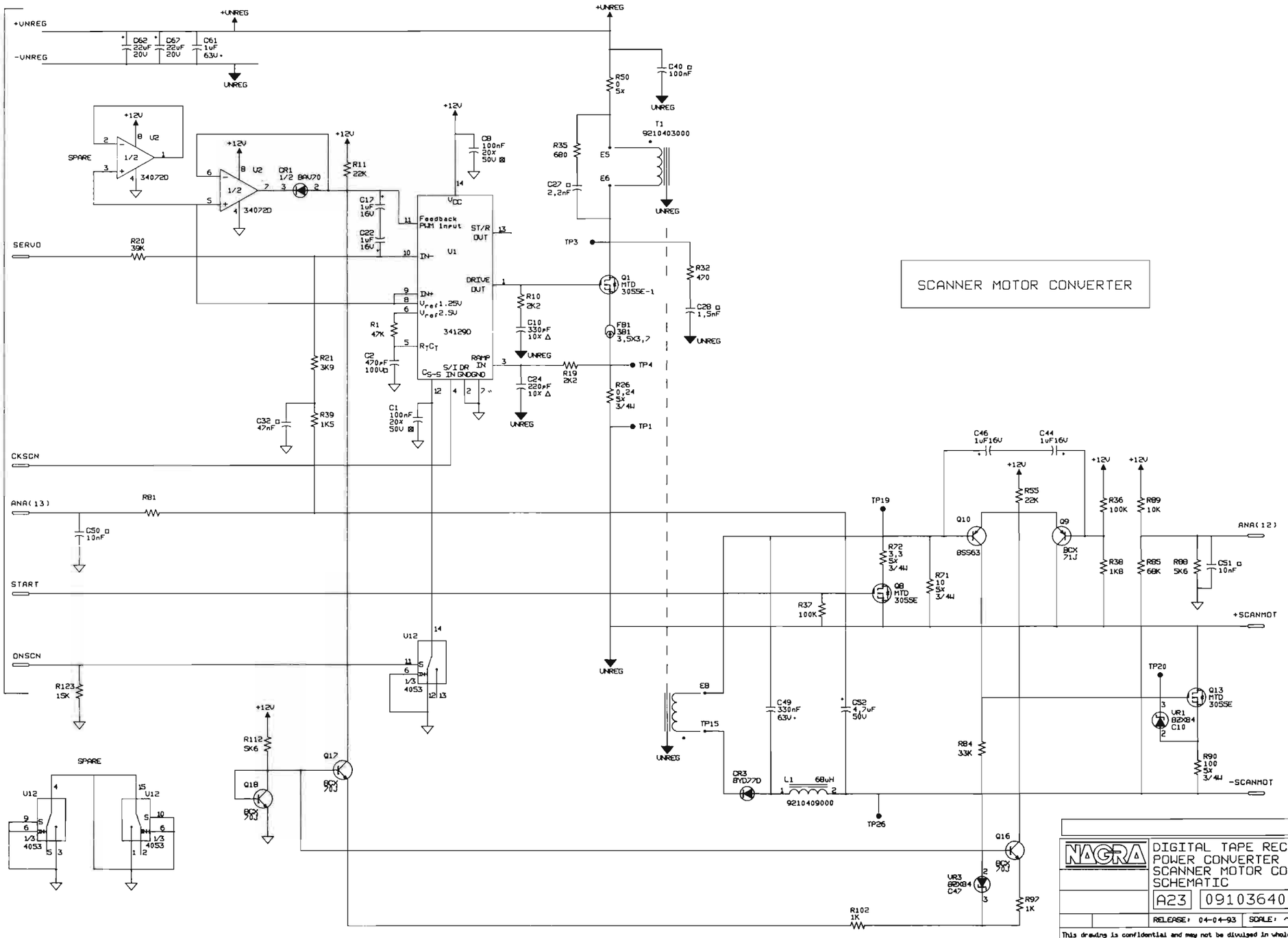
SCANNER MOTOR CONVERTER
+UNREG
-UNREG
UNREG
D62 22uF 20V
D67 22uF 20V
C61 1uF 63V
SPARE
U2 1/2 34072D
CR1 1/2 BAV70
R11 22K
C8 100nF 20x 50V
C12 1uF 16V
C22 1uF 16V
SERVO
R20 39K
Feedback PWM Input
ST/R OUT
U1
DRIVE OUT
IN-
IN+
Vref1.25V
Vref2.5V
341290
RTCT
CS-S
S/I IN
DR GND
GND
RAMP IN
R1 47K
C2 470pF 100Vo
R21 3K9
R39 1K5
C32 47nF
C1 100nF 20x 50V
R10 2K2
C10 330pF 10x
C24 220pF 10x
R19 2K2
R26 0,24 5x 3/4W
TP4
TP1
R50 0 5x
C40 100nF
R35 680
C27 2,2nF
E5
E6
T1 9210403000
TP3
Q1 MTD 3055E-1
FB1 3B1 3,5X3,7
R32 470
C28 1,5nF
CKSCN
ANA(13)
R81
C50 10nF
START
DNSCN
R123 15K
U12 1/3 4053
R112 5K6
Q18 BCX 70J
Q17 BCX 70J
C46 1uF16V
C44 1uF16V
R55 22K
TP19
Q10 BS563
Q9 BCX 71J
R36 100K
R89 10K
R38 1K8
R85 68K
R88 5K6
C51 10nF
ANA(12)
R72 5,3 5x 3/4W
Q8 MTD 3055E
R71 10 5x 3/4W
R37 100K
+SCANMOT
E8
TP15
C49 330nF 63V
C52 4,7uF 50V
D3 BYD77D
L1 68uH 9210409000
TP26
R84 33K
TP20
Q13 MTD 3055E
VR1 BZX84 C10
R90 100 5x 3/4W
-SCANMOT
Q16 BCX 70J
VR3 BZX84 C47
R97 1K
R102 1K
NAGRA
DIGITAL TAPE RECORDER NAGRA D
POWER CONVERTER
SCANNER MOTOR CONVERTER
SCHEMATIC
A23
0910364000
REV A
RELEASE: 04-04-93
SCALE: ~
SHEET: 4/7
This drawing is confidential and may not be divulged in whole or in part to a third party

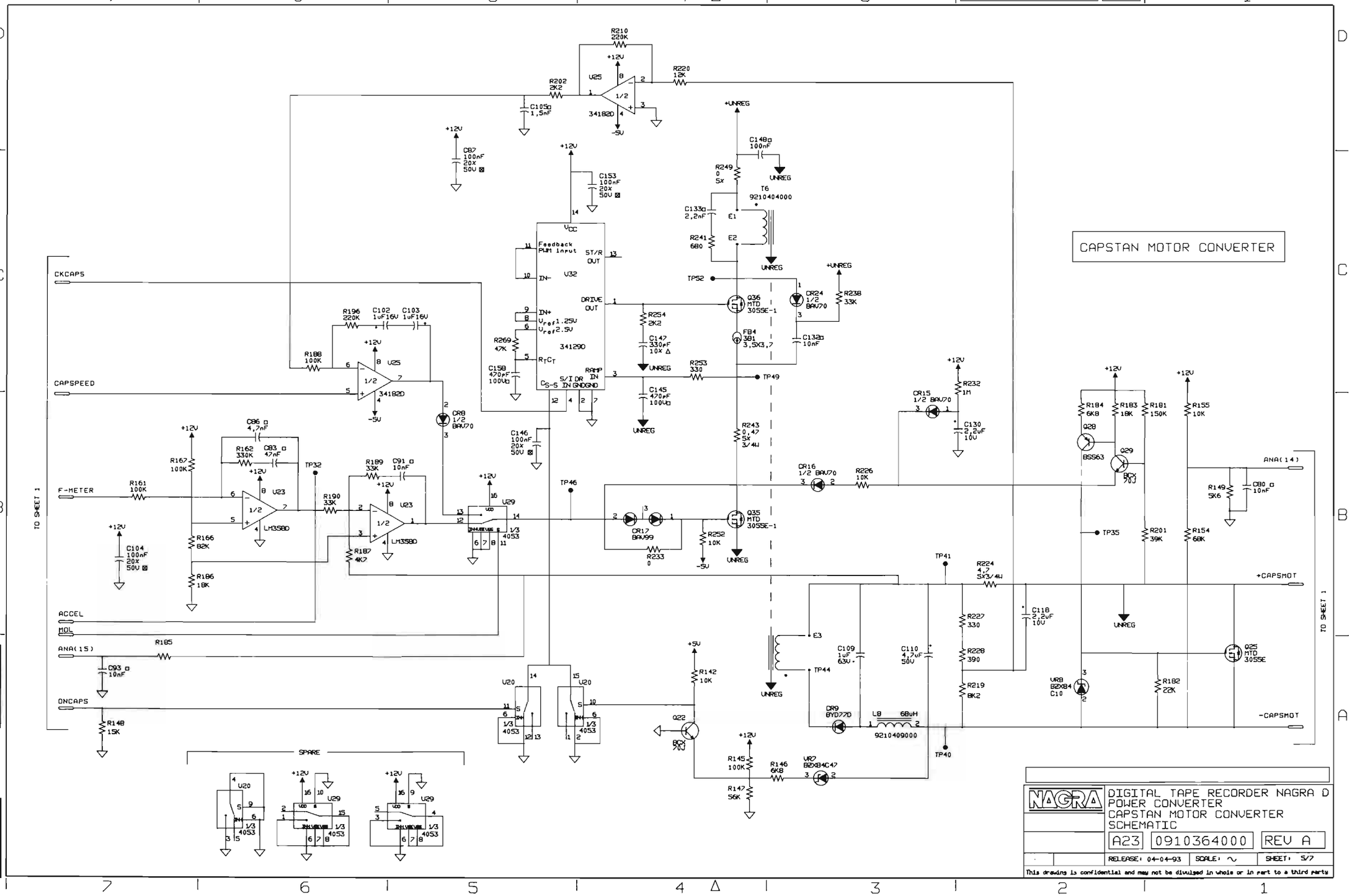

NAGRA

DIGITAL TAPE RECORDER NAGRA D
POWER CONVERTER
CAPSTAN MOTOR CONVERTER
SCHEMATIC

A23 | 0910364000 | REV A

RELEASE: 04-04-93 | SCALE: ~ | SHEET: 5/7

This drawing is confidential and may not be divulged in whole or in part to a third party

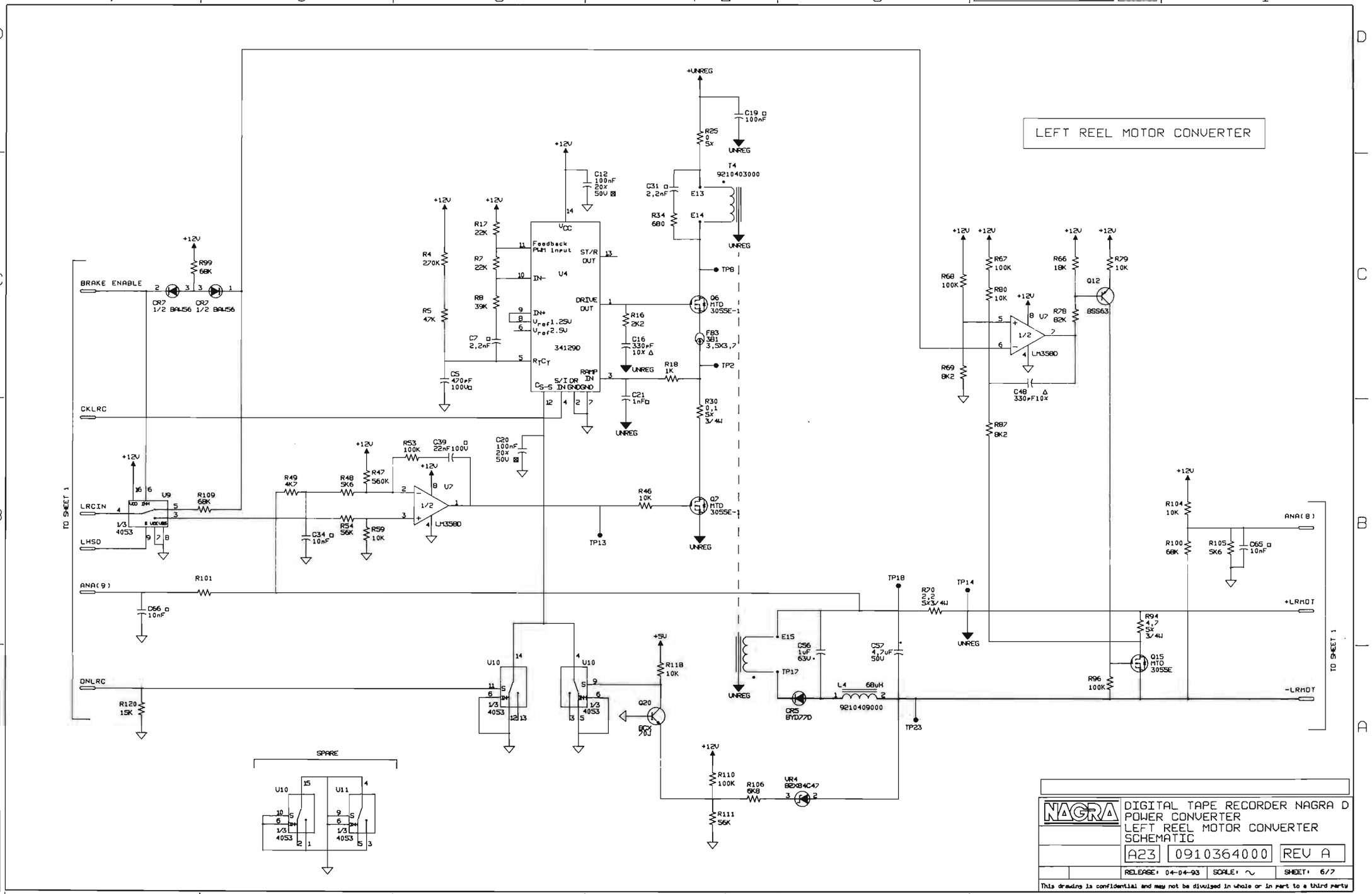

NAGRA	DIGITAL TAPE RECORDER NAGRA D POWER CONVERTER LEFT REEL MOTOR CONVERTER SCHEMATIC
A23	0910364000 REV A
RELEASE: 04-04-93	SCALE: ~ SHEET: 6/7

This drawing is confidential and may not be divulged in whole or in part to a third party

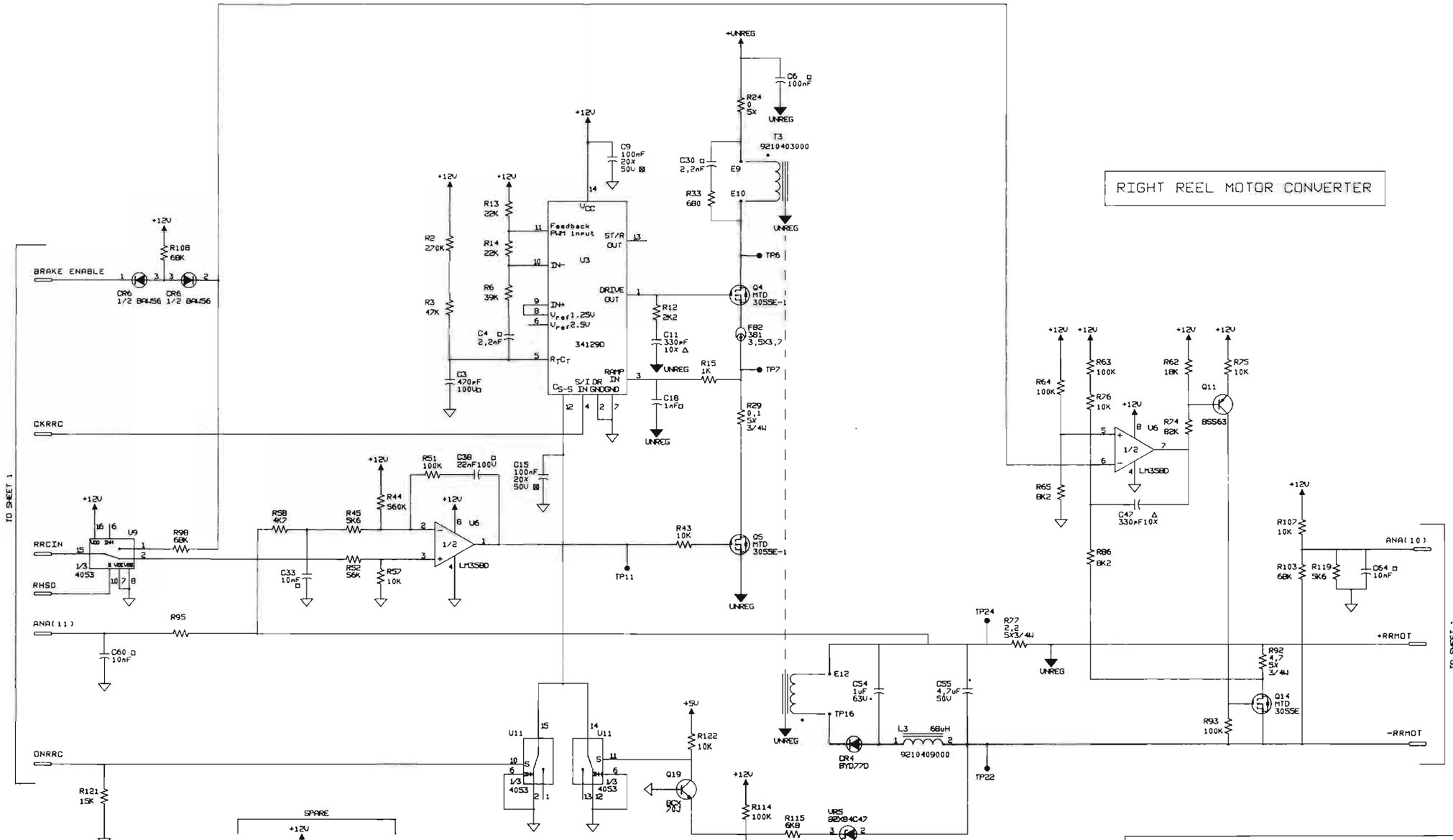

NAGRA

DIGITAL TAPE RECORDER NAGRA D
POWER CONVERTER
RIGHT REEL MOTOR CONVERTER
SCHEMATIC

A23	0910364000	REV A
RELEASE: 04-04-93	SCALE: ~	SHEET: 7/7

This drawing is confidential and may not be divulged in whole or in part to a third party

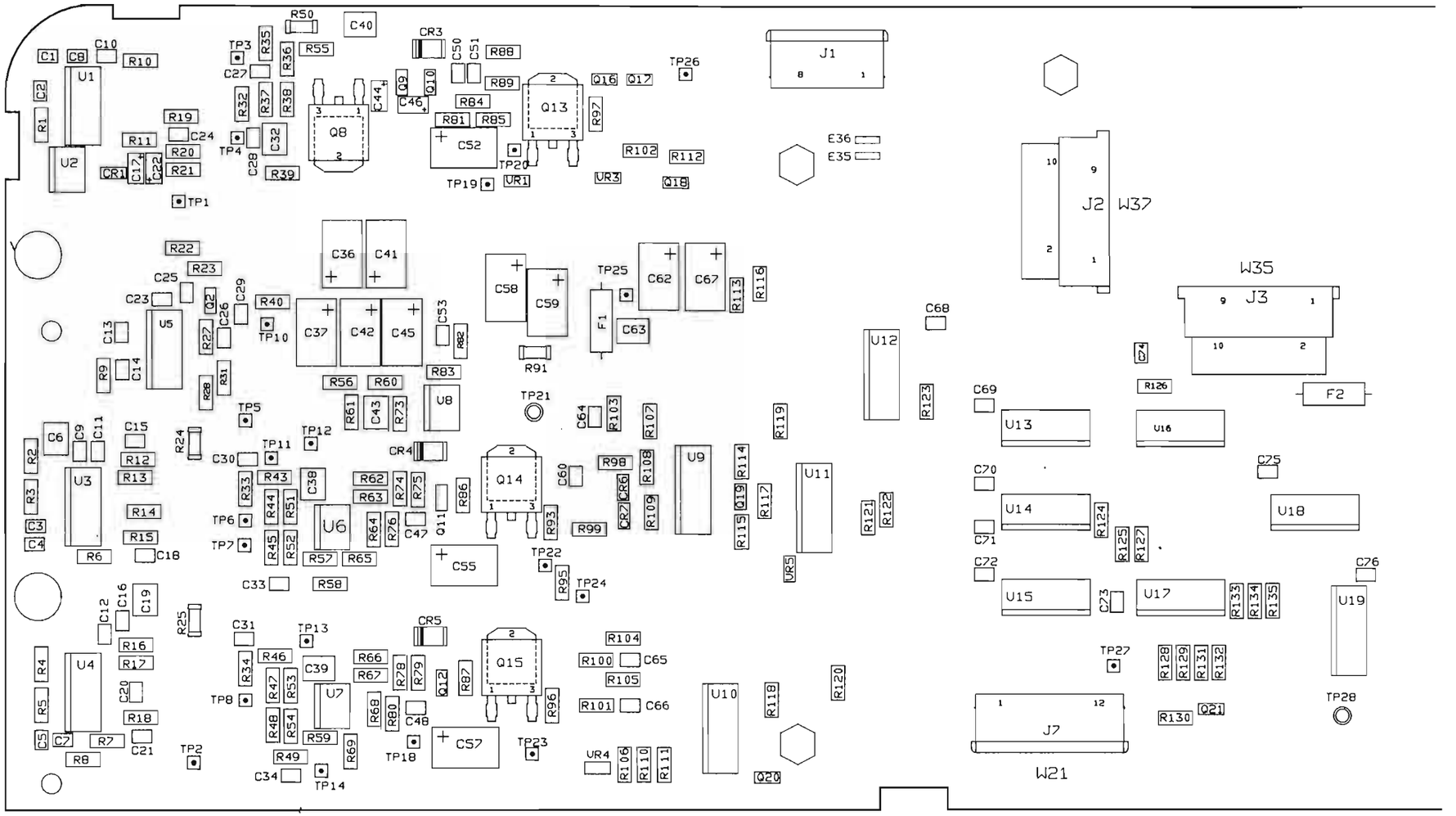

POWER CONVERTER ASSEMBLY (COMPONENTS SIDE)

WARNING: HANDLE ONLY AT STATIC SAFE WORK STATION
ATTENTION: MANIPULATION UNIQUEMENT AUTORISEE SUR POSTE DE TRAVAIL PROTEGE
ACHTUNG: HANDHABUNG DAHER NUR AN GESCHÜTZTEN ARBEITSPLÄTZEN ERLAUBT

NAGRA	AUDIO DIVISION	KUDELSKI SA CH-1033 CHESEAUX SWITZERLAND
DRAW BY: JC DATE: 04-04-93	DIGITAL TAPE RECORDER NAGRA D	
CHECK BY: DATE:	POWER CONVERTER (TOP)	
	PRINTED-WIRING ASSEMBLY	
	A23 9110364000	REV A
	RELEASE: 04-04-93 SCALE: ~	SHEET: 1/4

This drawing is confidential and may not be divulged in whole or in part to a third party

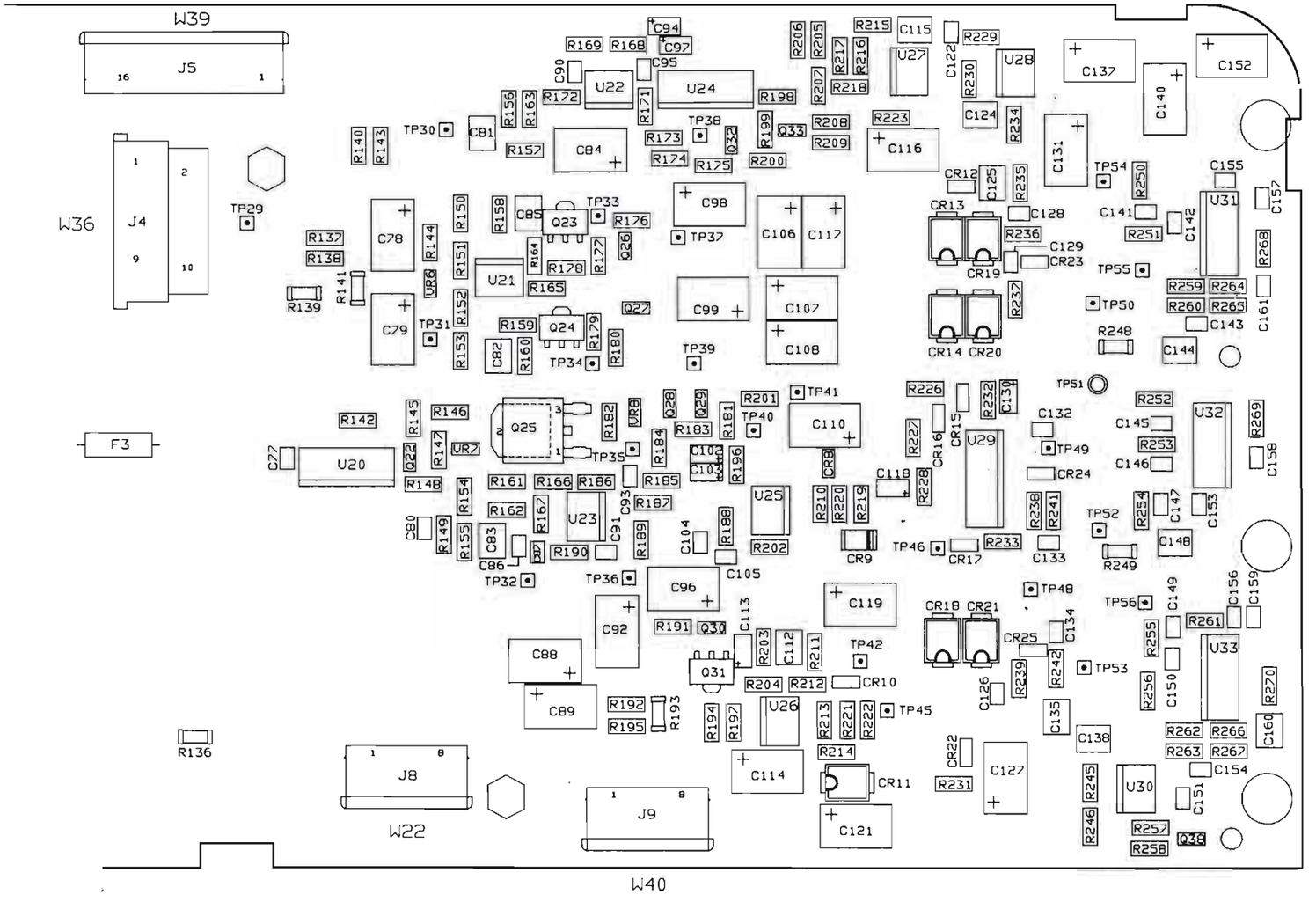

POWER CONVERTER ASSEMBLY (COMPONENTS SIDE)

WARNING: HANDLE ONLY AT STATIC SAFE WORK STATION
ATTENTION: MANIPULATION UNIQUEMENT AUTORISEE SUR POSTE DE TRAVAIL PROTEGE
ACHTUNG: HANDHABUNG DAHER NUR AN GESCHÜTZTEN ARBEITSPLÄTZEN ERLAUBT

NAGRA	AUDIO DIVISION	KUDELSKI SA CH-1033 CHESEAUX SWITZERLAND
DRAW BY: JC DATE: 04-04-93	DIGITAL TAPE RECORDER NAGRA D	
CHECK BY: DATE:	POWER CONVERTER (TOP)	
	PRINTED-WIRING ASSEMBLY	
	A23 9110264000	REV A
	RELEASE: 04-04-93 SCALE: ~	SHEET: 2 / 4

This drawing is confidential and may not be divulged in whole or in part to a third party

ASSEMBLAGE ET MONTAGE SUIVANT GAMME OPERATOIRE 9110364000[A]

(1) ASSEMBLAGE Q4,Q5,Q6,Q7

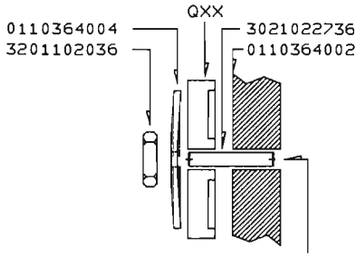

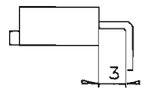

OUTIL PLIAGE
60005519

NOTA: JEU ENTRE GOUJON ET CI 0,5 MIN
ASSURER GOUJON LOCTITE 601

(2) ASSEMBLAGE CR2,Q3,Q34,Q37

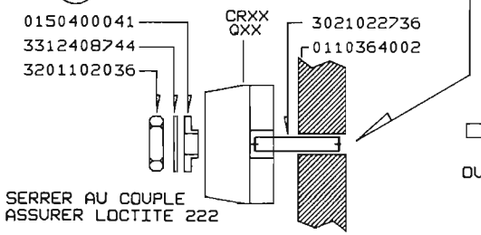

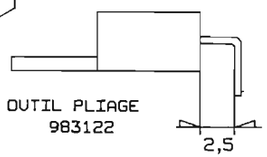

OUTIL PLIAGE
983122

SERRER AU COUPLE
ASSURER LOCTITE 222

(3) Q1 SOUDE A PLAT SUR LE RADIATEUR

(4) SELF L1,L2,L3,L4
ASSURER POSITION COLLE
DIP CLEAR 110

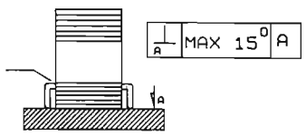

(5) CABLAGE TRANSFO T1 à T4
T1,T2,T3,T4 SURELEVES DE 0,5
T1,T3,T4 SORTIES FIL SUR LE DESSUS
T2 SORTIES FIL SUR LE DESSOUS
FIL LE PLUS COURT POSSIBLE SANS TOUCHER LA FERRITE
LE CABLAGE DES FILS NE DOIT PAS DEPASSER LE TRANSFO

(6) SERTIR ET ASSURER ARALDITE AW106

(7) MONTAGE FB1,FB2,FB3

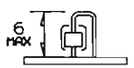

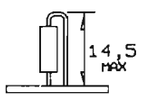

(8) MONTAGE RESISTANCES 3/4W 557052XXXX

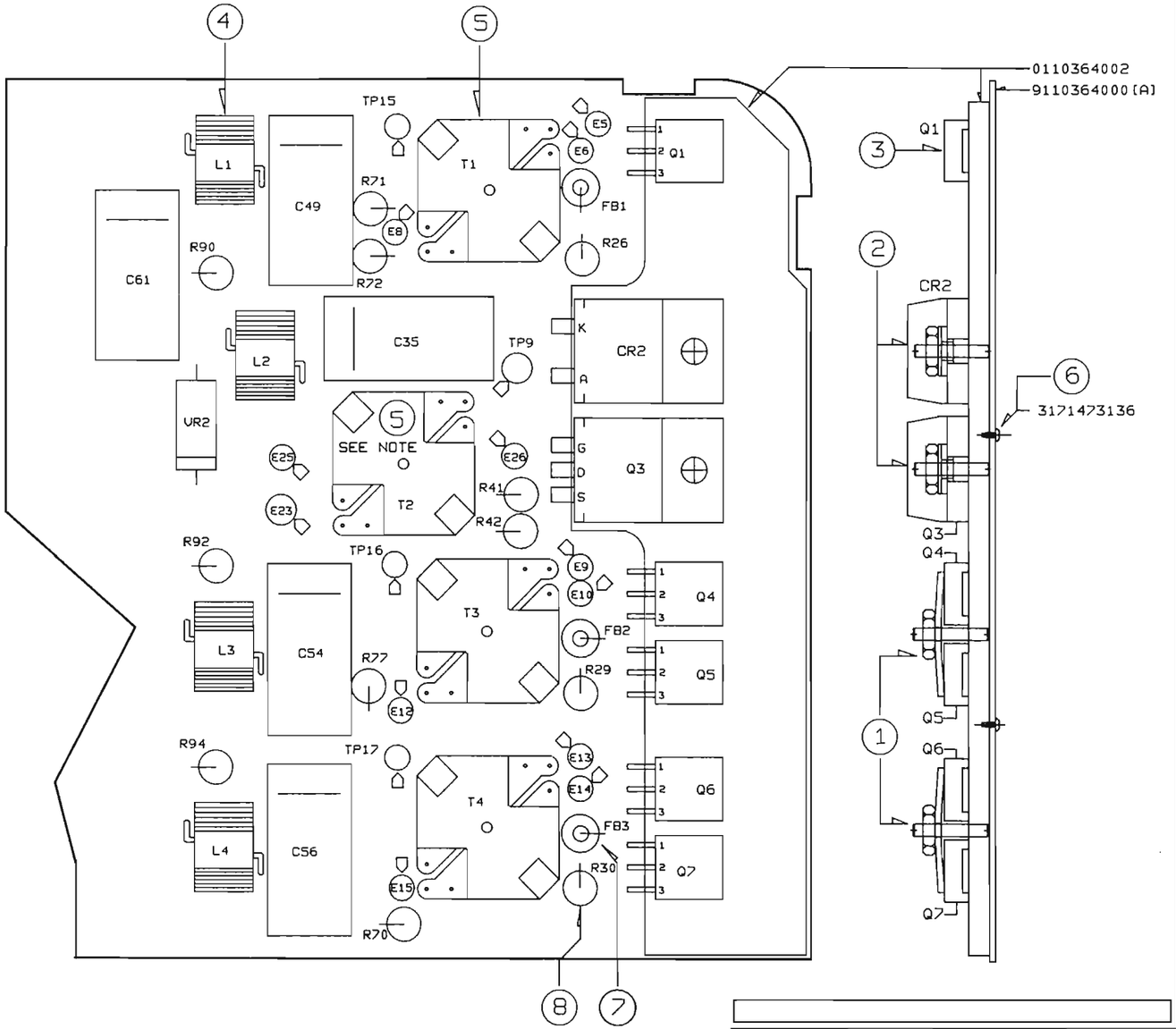

POWER CONVERTER ASSEMBLY (BOT COMPONENTS SIDE)

WARNING: HANDLE ONLY AT STATIC SAFE WORK STATION
ATTENTION: MANIPULATION UNIQUEMENT AUTORISEE SUR POSTE DE TRAVAIL PROTEGE
ACHTUNG: HANDHABUNG DAHER NUR AN GESCHÜTZTEN ARBEITSPLÄTZEN ERLAUBT

NAGRA	AUDIO DIVISION	KUDELSKI SA CH-1033 CHESEAUX SWITZERLAND
DRAW BY: JC DATE: 04-04-93	DIGITAL TAPE RECORDER NAGRA D	
CHECK BY: DATE:	POWER CONVERTER (BOT)	
	PRINTED-WIRING ASSEMBLY	
	A23 9110364000 REV A	
	RELEASE: 04-04-93 SCALE: ~ SHEET: 3/4	

This drawing is confidential and may not be divulged in whole or in part to a third party

ASSEMBLAGE ET MONTAGE SUIVANT GAMME OPERATOIRE 9110364000[A]

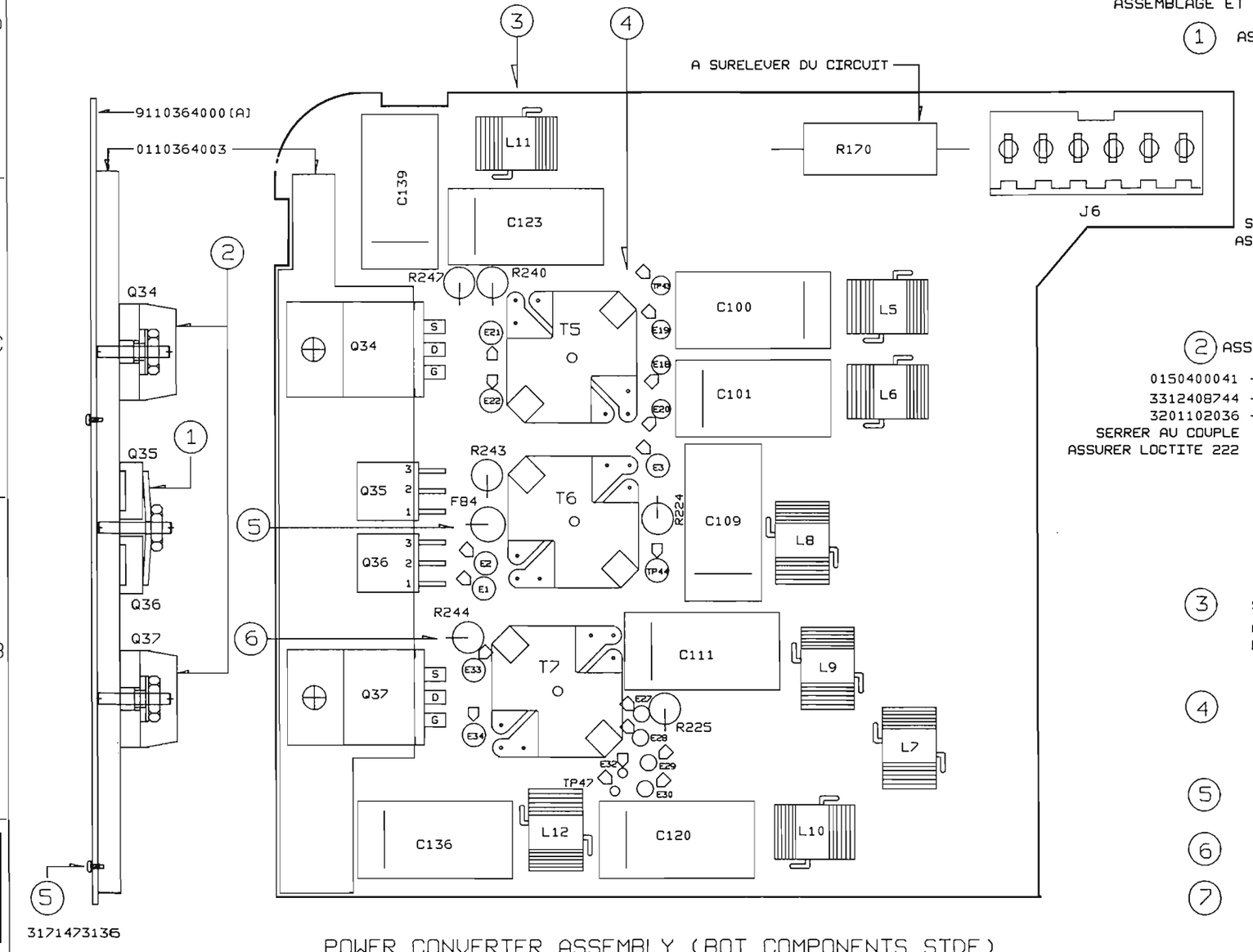

POWER CONVERTER ASSEMBLY (BOT COMPONENTS SIDE)

1 ASSEMBLAGE Q35,Q36

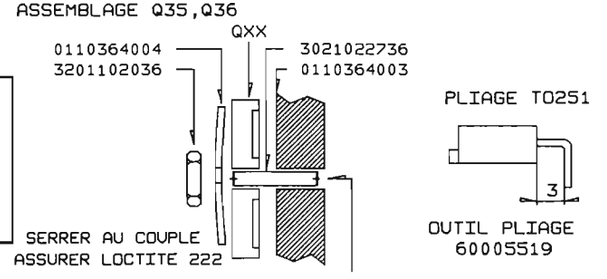

NOTA:JEU ENTRE GOUJON ET CI 0,5 MIN
ASSURER GOUJON LOCTITE 601

2 ASSEMBLAGE Q34,Q37

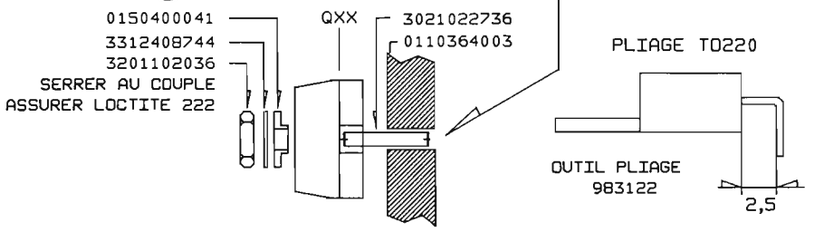

3 SELF L1,L2,L3,L4
ASSURER POSITION COLLE
DIP CLEAR 110

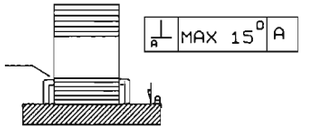

4 CABLAGE TRANSFO T5 à T7
T5,T6,T7, SURELEVES DE 0,5
FIL LE PLUS COURT POSSIBLE SANS TOUCHER LA FERRITE
LE CABLAGE DES FILS NE DOIT PAS DEPASSER LE TRANSFO

5 SERTIR ET ASSURER ARALDITE AW106

6 MONTAGE FB4

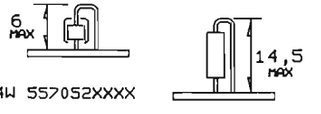

7 MONTAGE RESISTANCES 3/4W 557052XXXX

WARNING: HANDLE ONLY AT STATIC SAFE WORK STATION
ATTENTION: MANIPULATION UNIQUEMENT AUTORISEE SUR POSTE DE TRAVAIL PROTEGE
ACHTUNG: HANDHABUNG DAHER NUR AN GESCHÜTZTEN ARBEITSPLÄTZEN ERLAUBT

NAGRA	AUDIO DIVISION	KUDELSKI SA CH-1033 CHESEAUX SWITZERLAND
DRAW BY: JC DATE: 04-04-93	DIGITAL TAPE RECORDER NAGRA D POWER CONVERTER (BOT)	
CHECK BY: DATE:	PRINTED-WIRING ASSEMBLY	
	A23 9110364000	REV A
	RELEASE: 04-04-93 SCALE: ~	SHEET: 4/4

This drawing is confidential and may not be divulged in whole or in part to a third party

9110368100[B] 1/1

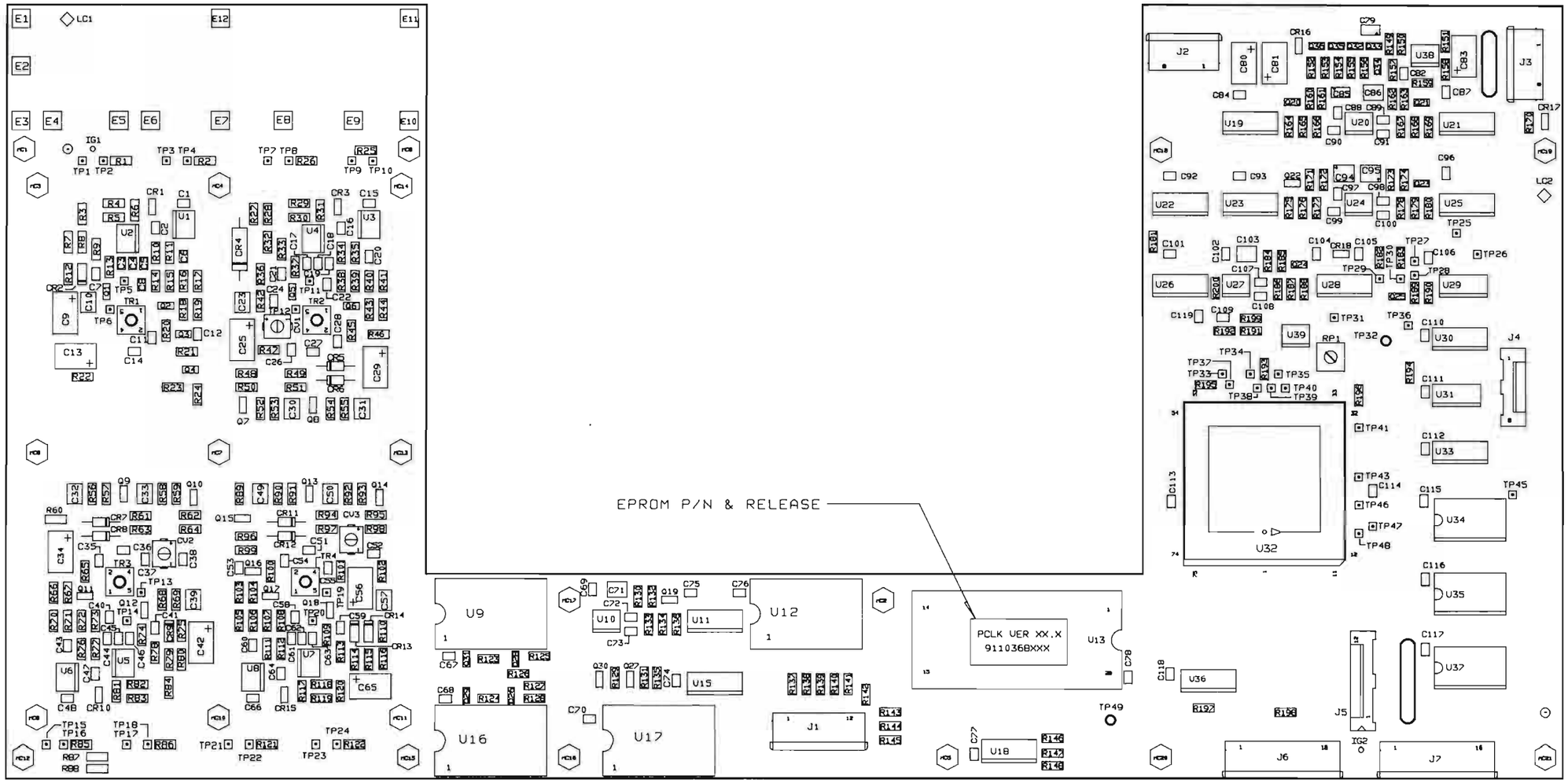

WARNING: HANDLE ONLY AT STATIC SAFE WORK STATION
ATTENTION: MANIPULATION UNIQUEMENT AUTORISEE SUR POSTE DE TRAVAIL PROTEGE
ACHTUNG: HANDHABUNG DAHER NUR AN GESCHÜTZTEN ARBEITSPLÄTZEN ERLAUBT

NAGRA	AUDIO DIVISION	KUDELSKI SA CH-1033 CHESEAUX SWITZERLAND
DRAW BY: JC DATE: 04-04-93	DIGITAL TAPE RECORDER NAGRA D	
CHECK BY: DATE:	CLOCK GENERATOR	
	PRINTED-WIRING ASSEMBLY	
	A24 9110368100	REV B
	RELEASE: 04-04-93 SCALE: ∿	SHEET: 1/1

This drawing is confidential and may not be divulged in whole or in part to a third party

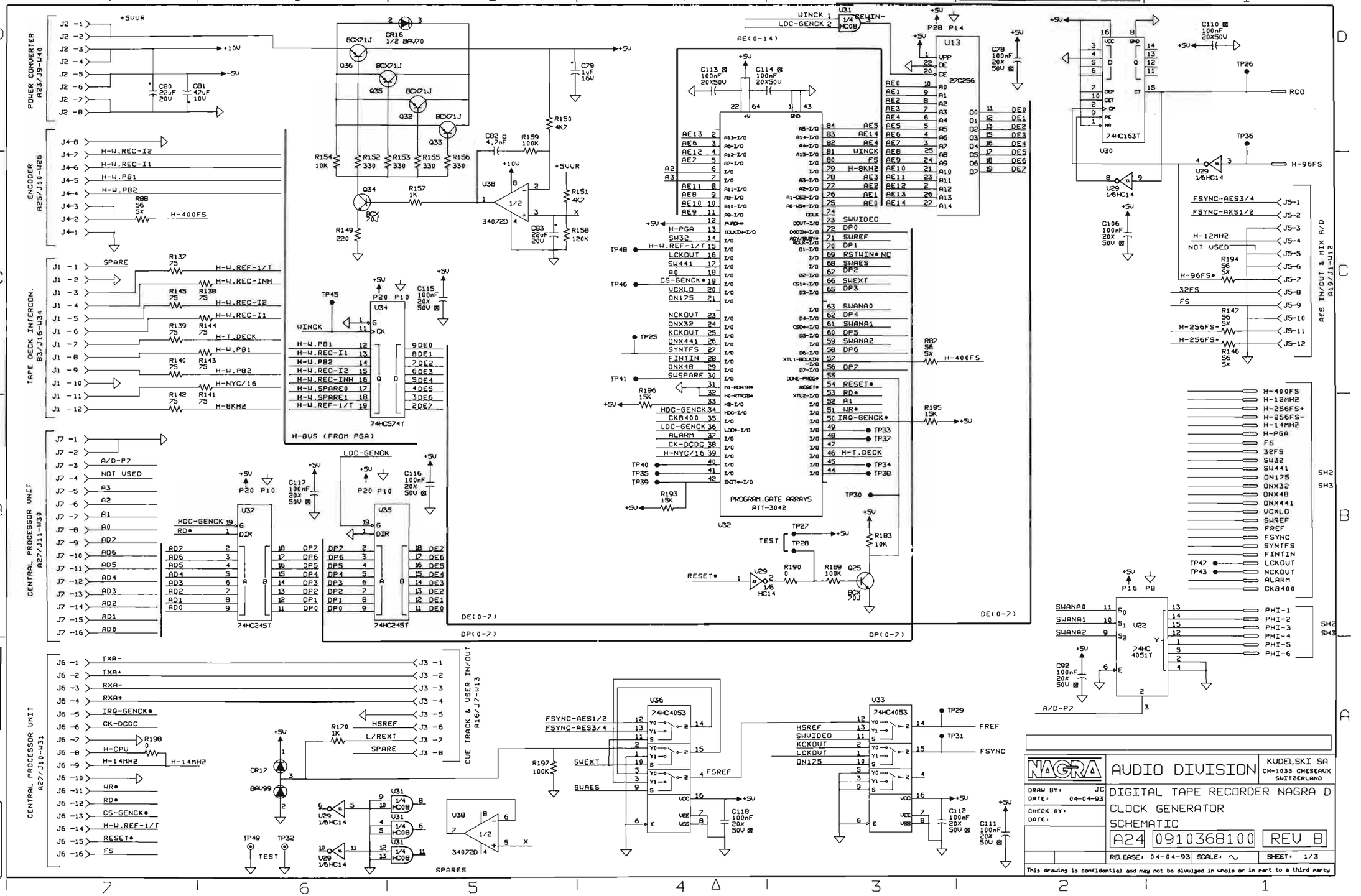
0910368100[B]
1/3
POWER CONVERTER A23/J9-U40
ENCODER A25/J10-U26
TAPE DECK INTERCON. B3/J16-U34
CENTRAL PROCESSOR UNIT A27/J11-U30
CENTRAL PROCESSOR UNIT A27/J10-U31
CUE TRACK & USER IN/OUT A16/J7-U13
AES IN/OUT & MIX A/D A19/J1-U12
H-BUS (FROM PGA)
PROGRAM.GATE ARRAYS ATT-3042
SPARES
AUDIO DIVISION
KUDELSKI SA
CH-1033 CHESEAUX SWITZERLAND
DIGITAL TAPE RECORDER NAGRA D
CLOCK GENERATOR
SCHEMATIC
A24 0910368100 REV B
RELEASE: 04-04-93
SHEET: 1/3
This drawing is confidential and may not be divulged in whole or in part to a third party

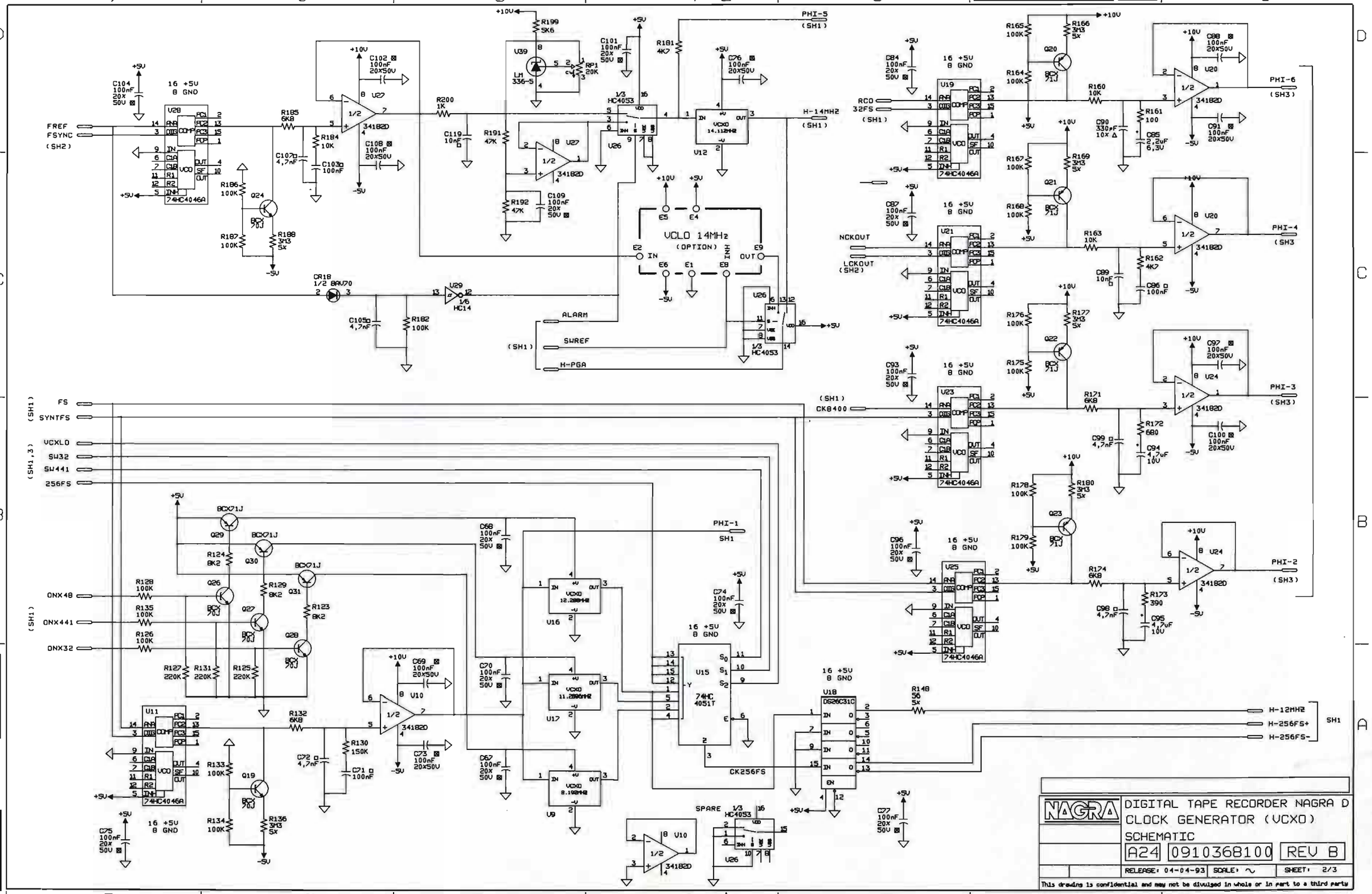

NAGRA

DIGITAL TAPE RECORDER NAGRA D
CLOCK GENERATOR (VCXO)
SCHEMATIC

A24 | 0910368100 | REV B

RELEASE: 04-04-93 | SCALE: ~ | SHEET: 2/3

This drawing is confidential and may not be divulged in whole or in part to a third party

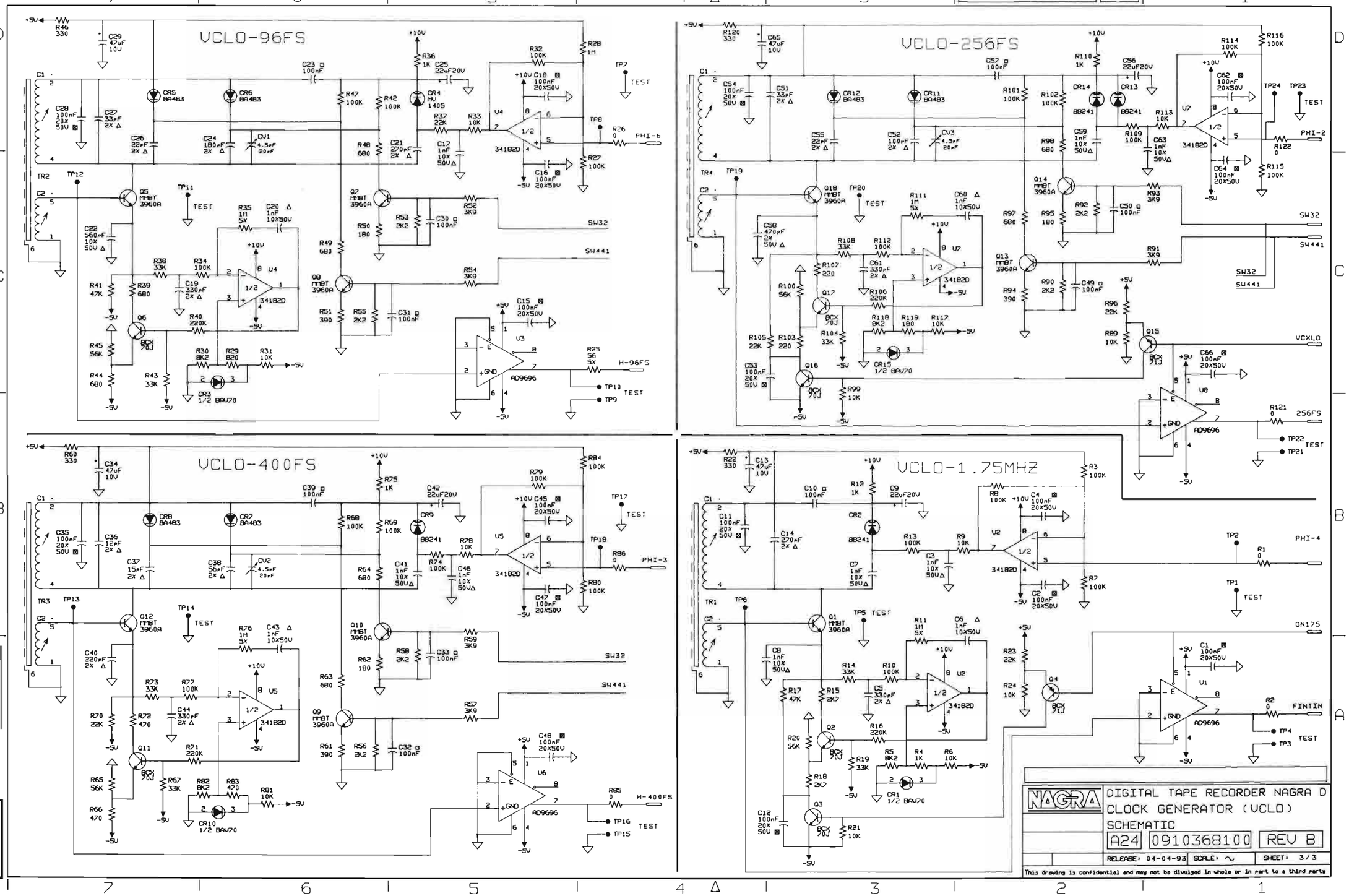
VCLO-96FS
VCLO-256FS
VCLO-400FS
VCLO-1.75MHZ
PHI-6
PHI-2
PHI-3
PHI-4
H-96FS
256FS
H-400FS
VCXLO
FINTIN
DN175
SW32
SW441
TEST
DIGITAL TAPE RECORDER NAGRA D
CLOCK GENERATOR (VCLO)
SCHEMATIC
A24 0910368100 REV B
RELEASE: 04-04-93 SCALE: ~ SHEET: 3/3
This drawing is confidential and may not be divulged in whole or in part to a third party

9110360200 [A] 1/1

WARNING: HANDLE ONLY AT STATIC SAFE WORK STATION
ATTENTION: MANIPULATION UNIQUEMENT AUTORISEE SUR POSTE DE TRAVAIL PROTEGE
ACHTUNG: HANDHABUNG DAHER NUR AN GESCHÜTZTEN ARBEITSPLÄTZEN ERLAUBT

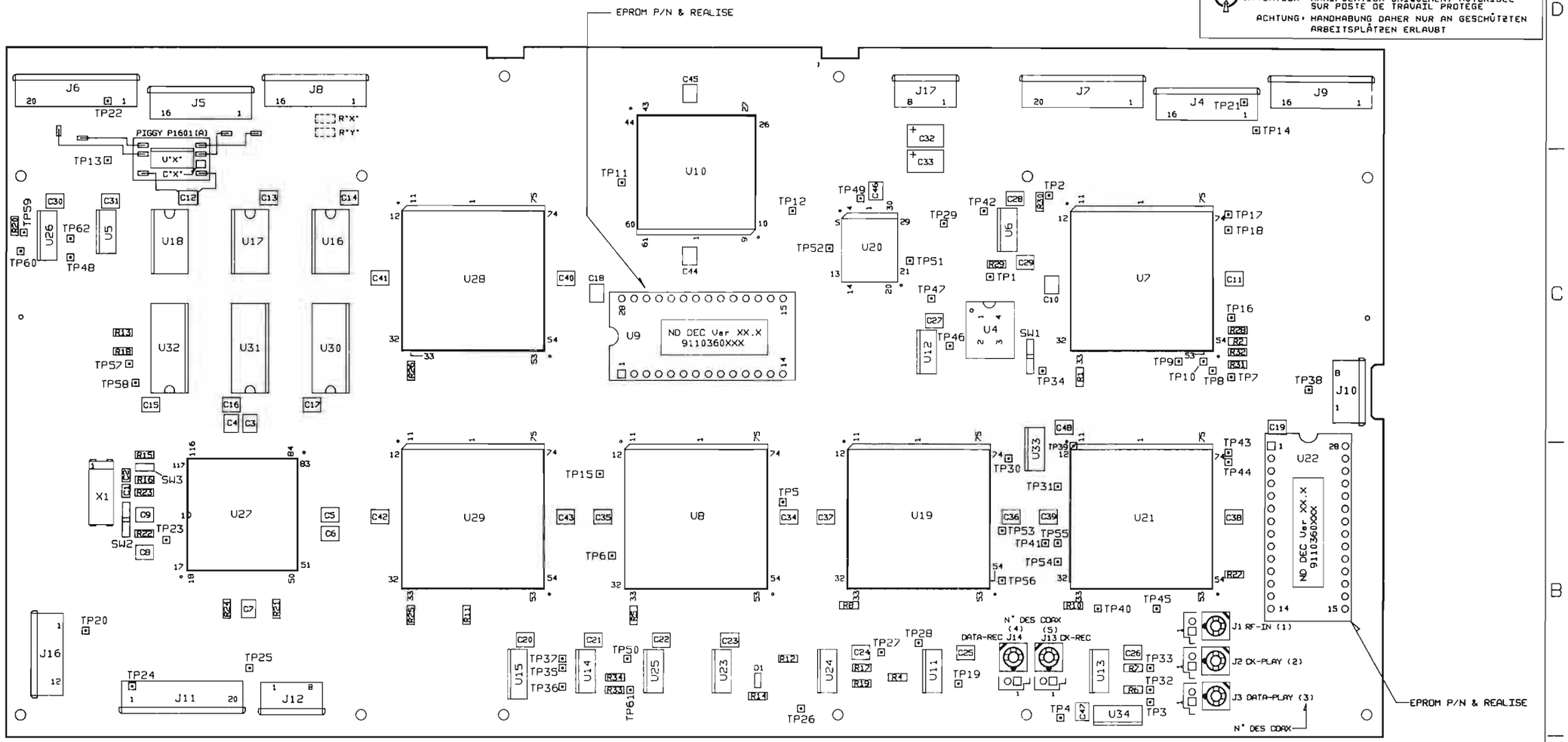

NAGRA

NAGRA	AUDIO DIVISION	KUDELSKI SA CH-1033 CHESEAUX SWITZERLAND
DRAW BY: GA DATE: 04-04-93	DIGITAL TAPE RECORDER NAGRA D ENCODER	
CHECK BY: DATE:	PRINTED-WIRING ASSEMBLY	
	A25 9110360200 REV A	
	RELEASE: 04-04-93 SCALE: ~ SHEET: 1/1	

This drawing is confidential and may not be divulged in whole or in part to a third party

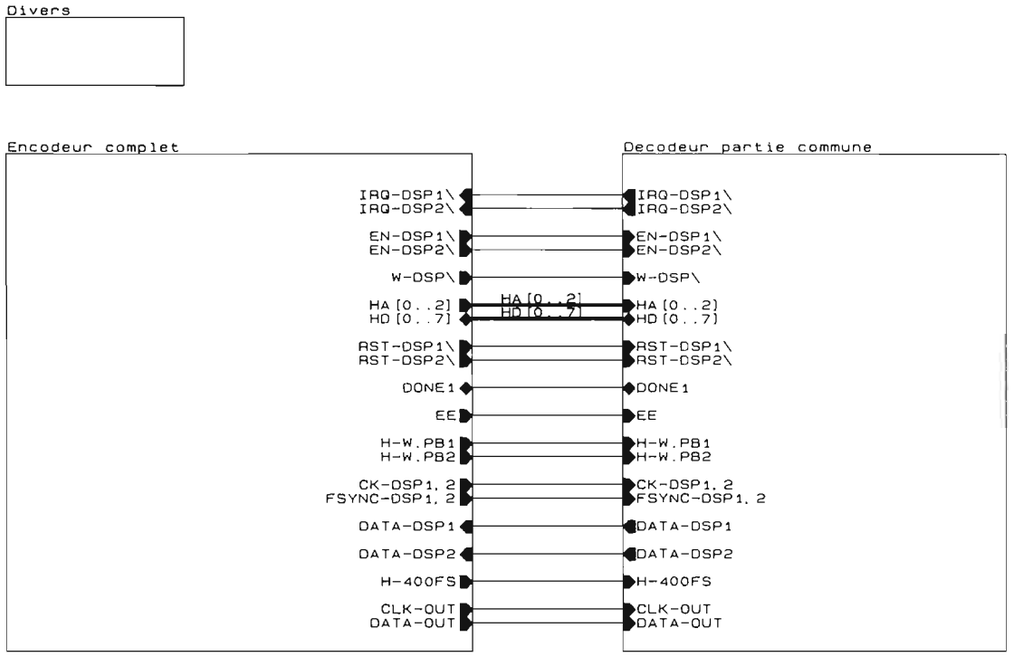

NAGRA AUDIO DIVISION
KUDELSKI SA
CH-1033 CHESEAUX
SWITZERLAND

DRAW BY: GA
DATE: 04-04-93
CHECK BY:
DATE:

DIGITAL TAPE RECORDER NAGRA D
ENCODER
SCHEMATIC

A25 | 0910360200 | REV A

RELEASE: 04-04-93 | SCALE: ~ | SHEET: 1/11

This drawing is confidential and may not be divulged in whole or in part to a third party

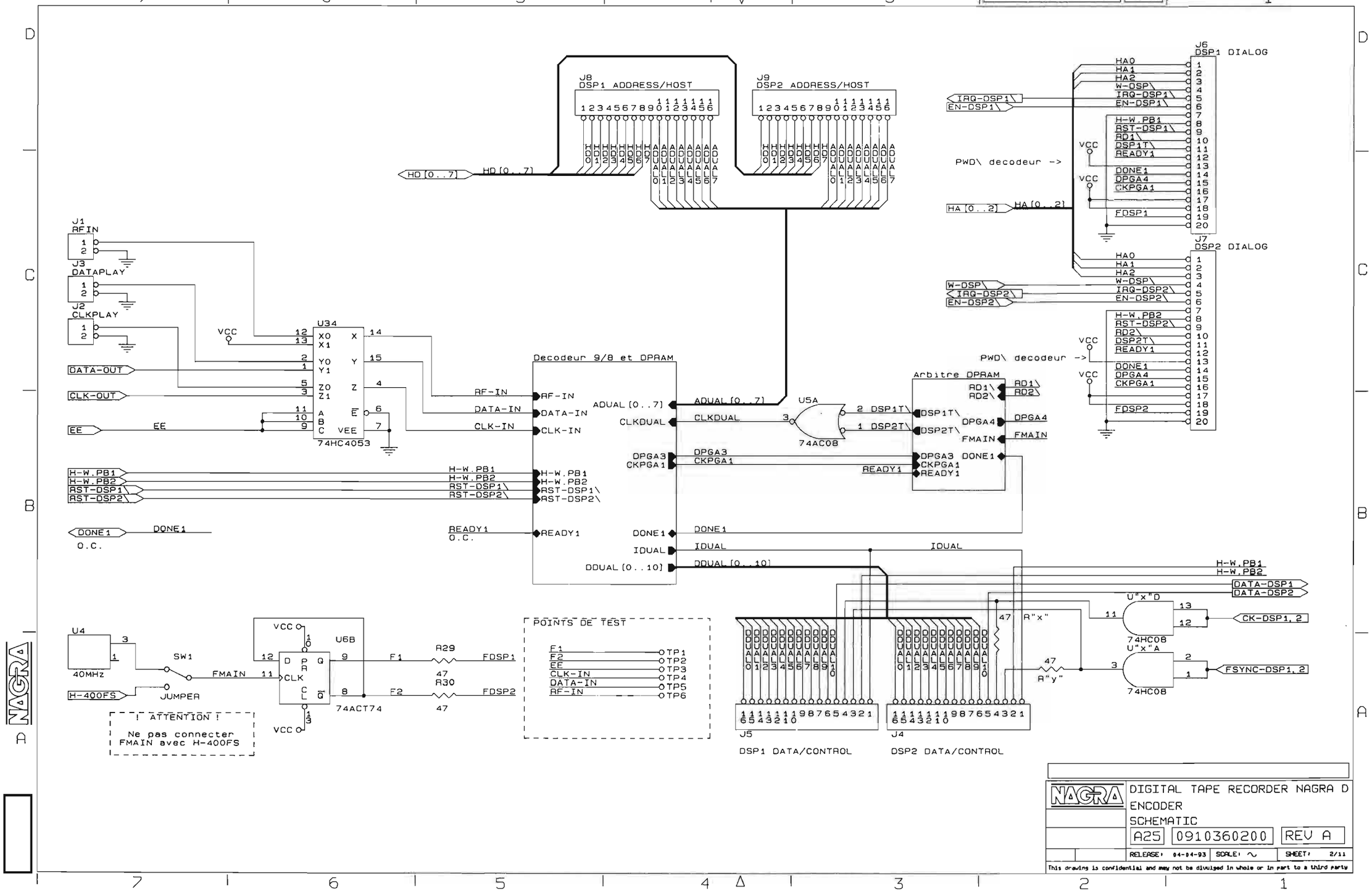

NAGRA

DIGITAL TAPE RECORDER NAGRA D
ENCODER
SCHEMATIC

A25	0910360200	REV A
RELEASE: 04-04-93	SCALE: ~	SHEET: 2/11

This drawing is confidential and may not be divulged in whole or in part to a third party

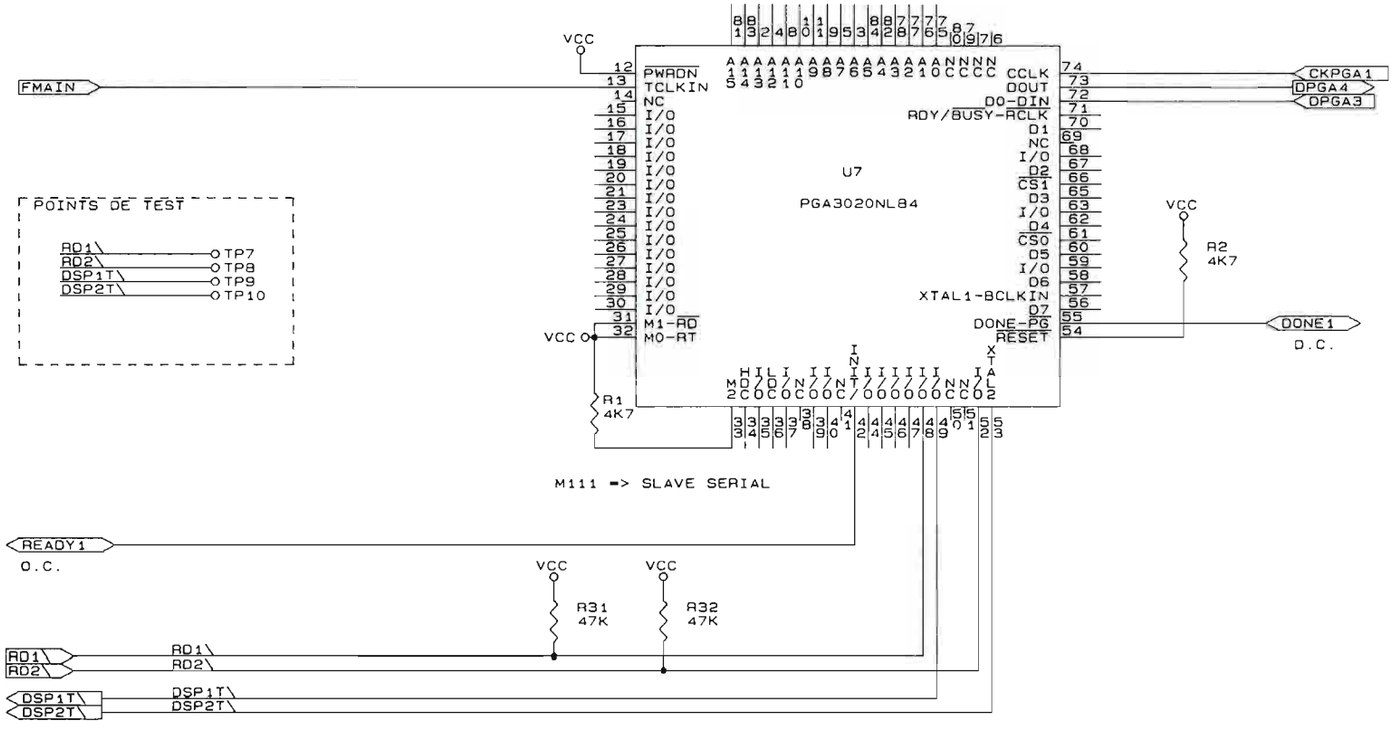

NAGRA

DIGITAL TAPE RECORDER NAGRA D
ENCODER
SCHEMATIC

A25 | 0910360200 | REV A

RELEASE: 04-04-93 | SCALE: ~ | SHEET: 3/11

This drawing is confidential and may not be divulged in whole or in part to a third party

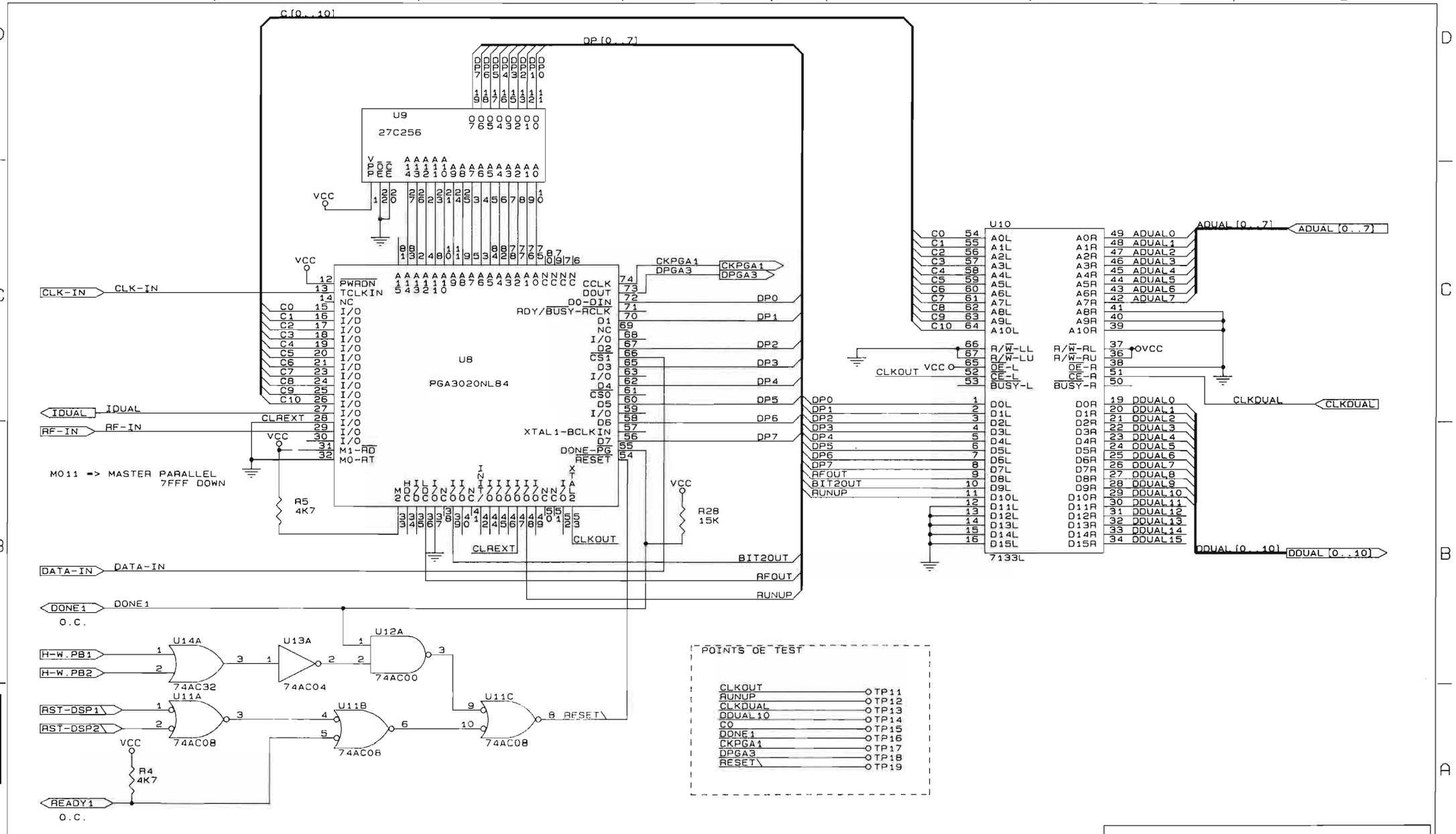

NAGRA

DIGITAL TAPE RECORDER NAGRA D
ENCODER
SCHEMATIC

A25 | 0910360200 | REV A

RELEASE: 04-04-93 | SCALE: ∿. | SHEET: 4/11

This drawing is confidential and may not be divulged in whole or in part to a third party

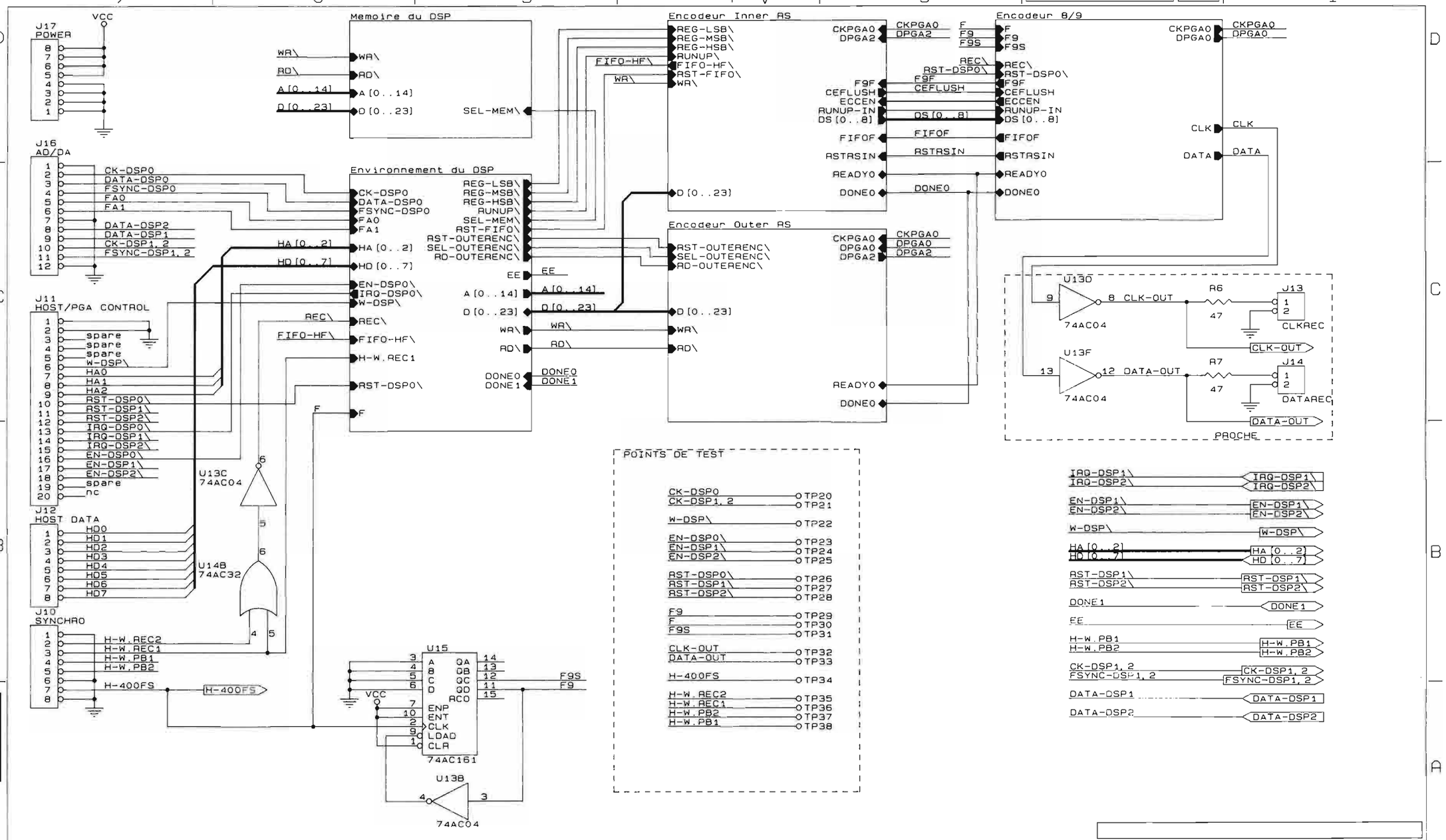

NAGRA

DIGITAL TAPE RECORDER NAGRA D
ENCODER
SCHEMATIC

A25 | 0910360200 | REV A

RELEASE: 04-04-93 | SCALE: ~ | SHEET: 5/11

This drawing is confidential and may not be divulged in whole or in part to a third party

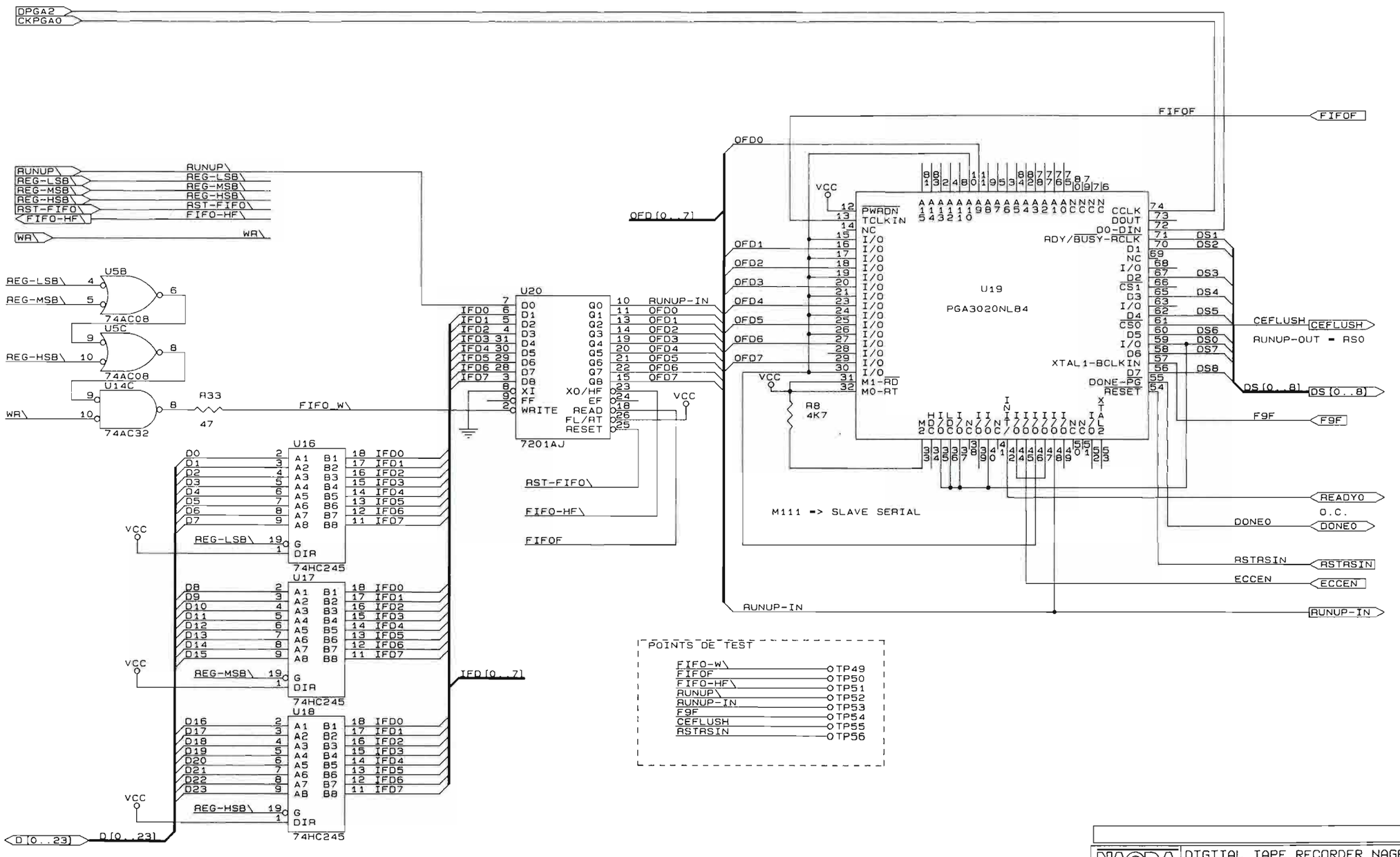

DIGITAL TAPE RECORDER NAGRA D
ENCODER
SCHEMATIC

A25 | 0910360200 | REV A

RELEASE: 04-04-93 | SCALE: ~ | SHEET: 6/11

This drawing is confidential and may not be divulged in whole or in part to a third party

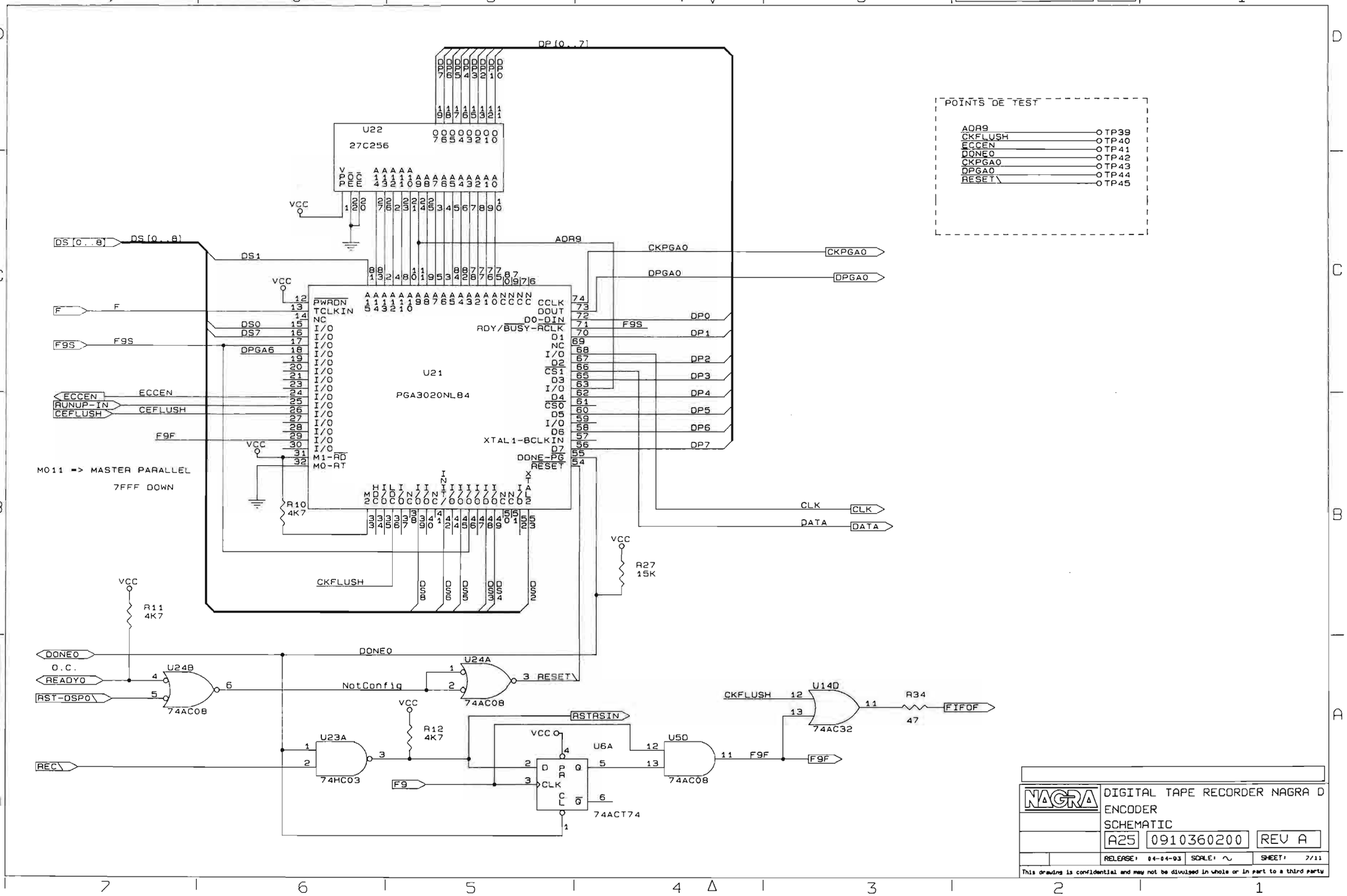
DP[0..7]
U22
27C256
VCC
DS[0..8]
DS[0..8]
DS1
ADR9
CKPGA0
DPGA0
F
F9S
DS0
DS7
DPGA6
ECCEN
RUNUP-IN
CEFLUSH
F9F
U21
PGA3020NL84
PWRDN
TCLKIN
NC
I/O
CCLK
DOUT
D0-DIN
RDY/BUSY-ACLK
D1
D2
CS1
D3
D4
CS0
D5
D6
XTAL1-BCLKIN
D7
DONE-PG
RESET
M1-RD
M0-AT
DP0
DP1
DP2
DP3
DP4
DP5
DP6
DP7
CLK
DATA
M011 => MASTER PARALLEL
7FFF DOWN
R10
4K7
R27
15K
CKFLUSH
R11
4K7
DONE0
O.C.
READY0
RST-DSP0\
U24B
74AC08
NotConfig
U24A
74AC08
RESET\
R12
4K7
U23A
74HC03
REC\
F9
ASTASIN
U6A
74ACT74
U50
74AC08
F9F
U14D
74AC32
R34
47
FIFOF
POINTS DE TEST
ADR9
CKFLUSH
ECCEN
DONE0
CKPGA0
DPGA0
RESET\
TP39
TP40
TP41
TP42
TP43
TP44
TP45
NAGRA
DIGITAL TAPE RECORDER NAGRA D
ENCODER
SCHEMATIC
A25
0910360200
REV A
RELEASE: 04-04-93
SCALE: ~
SHEET: 7/11
This drawing is confidential and may not be divulged in whole or in part to a third party

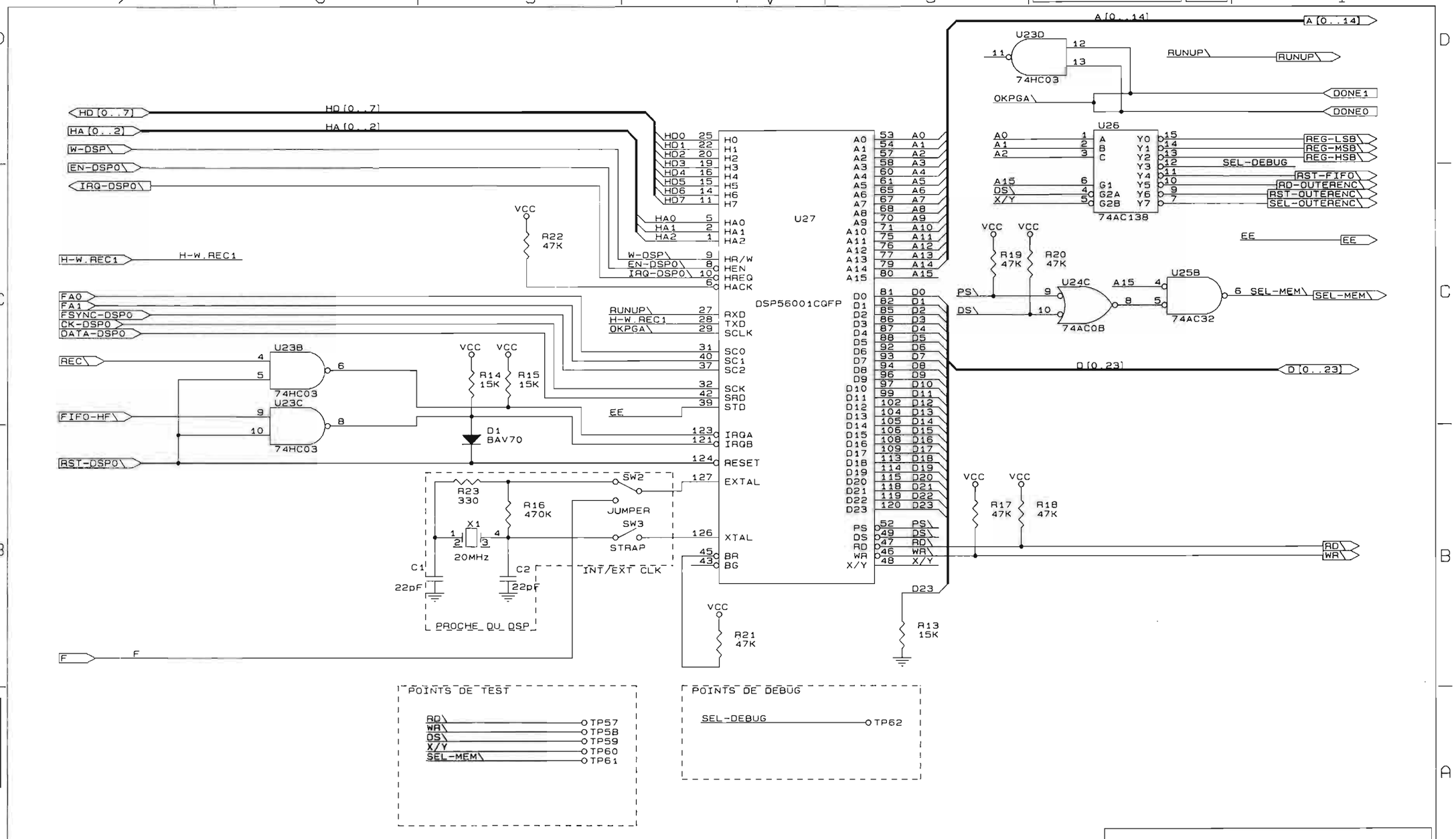

NAGRA

DIGITAL TAPE RECORDER NAGRA D
ENCODER
SCHEMATIC

A25 | 0910360200 | REV A

RELEASE: 04-04-93 | SCALE: ~ | SHEET: 8/11

This drawing is confidential and may not be divulged in whole or in part to a third party

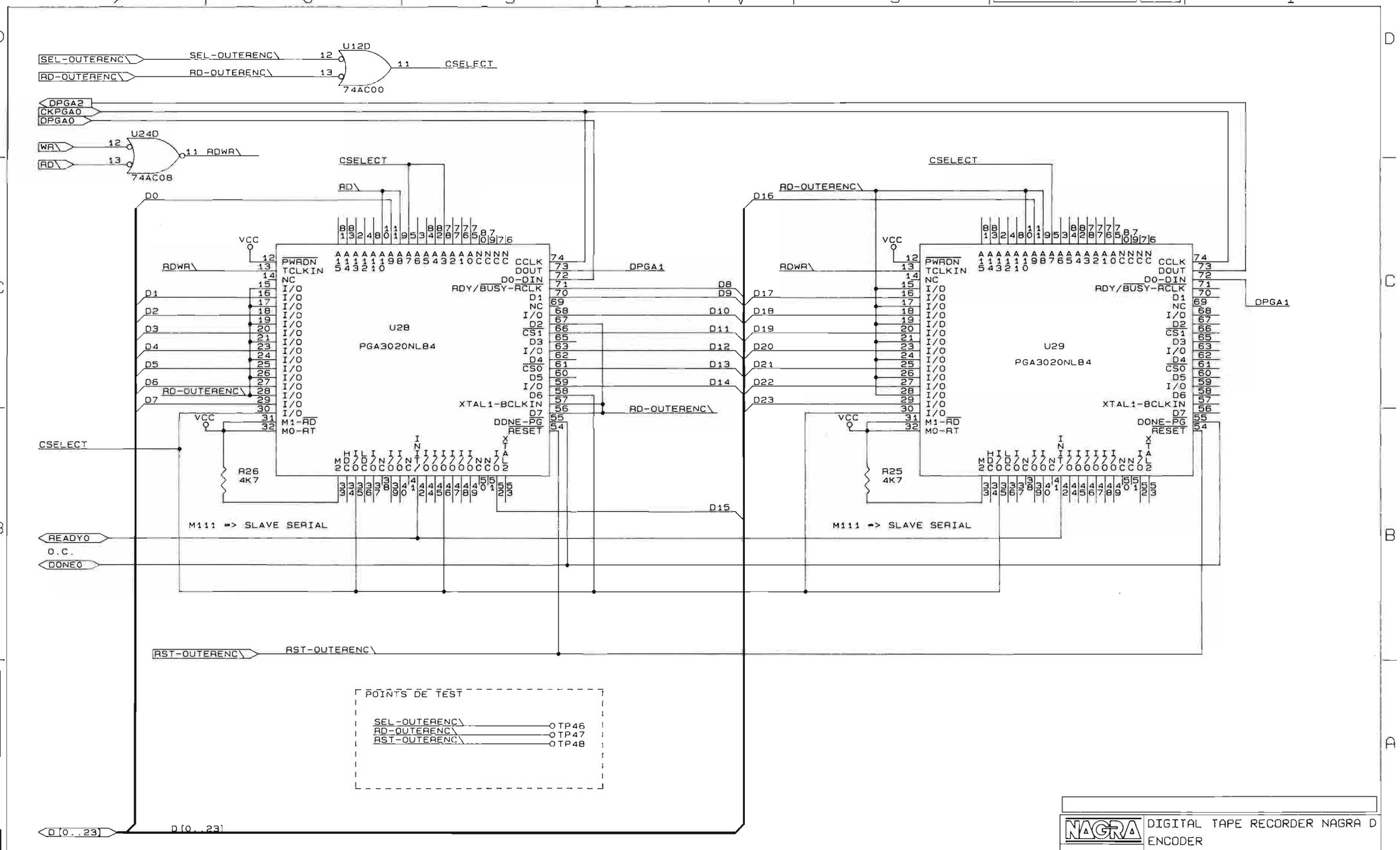

DIGITAL TAPE RECORDER NAGRA D
ENCODER
SCHEMATIC

A25 | 0910360200 | REV A

RELEASE: 04-04-93 | SCALE: ~ | SHEET: 9/11

This drawing is confidential and may not be divulged in whole or in part to a third party

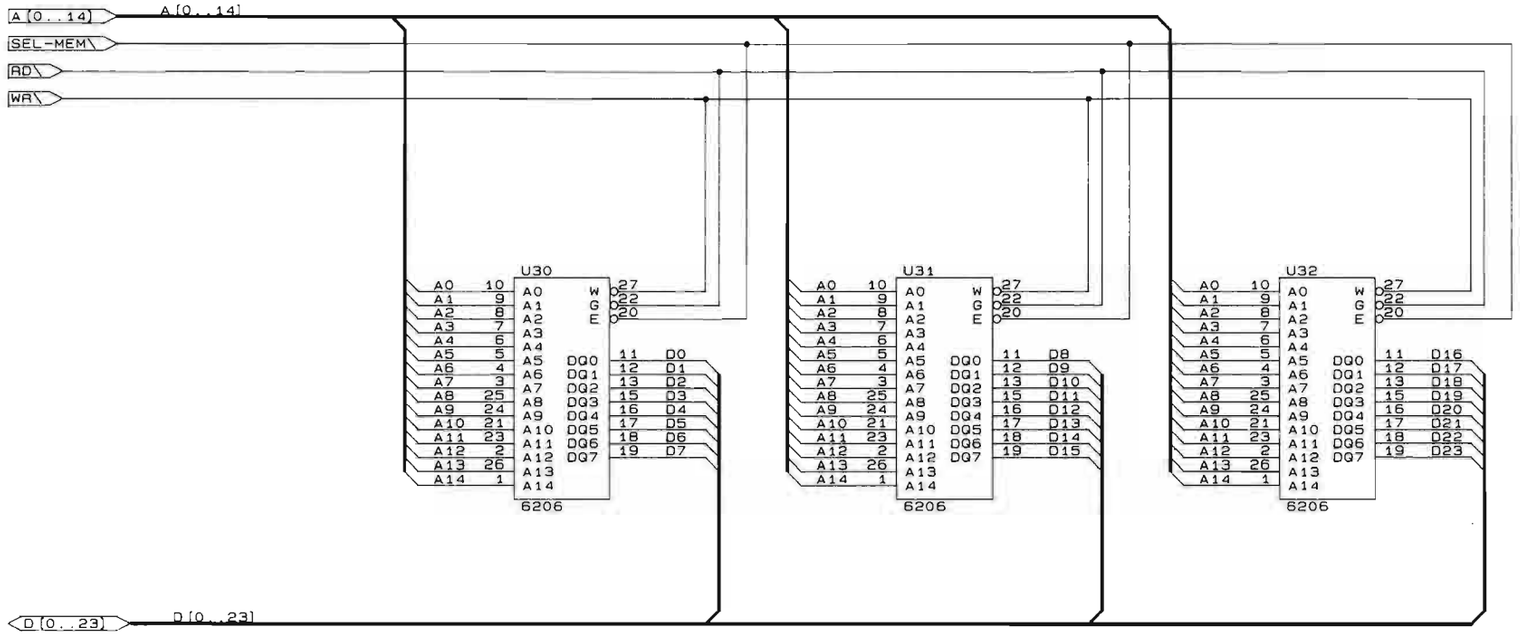

NAGRA

DIGITAL TAPE RECORDER NAGRA D
ENCODER
SCHEMATIC

A25 | 0910360200 | REV A

RELEASE: 04-04-93 | SCALE: ~ | SHEET: 10/11

This drawing is confidential and may not be divulged in whole or in part to a third party

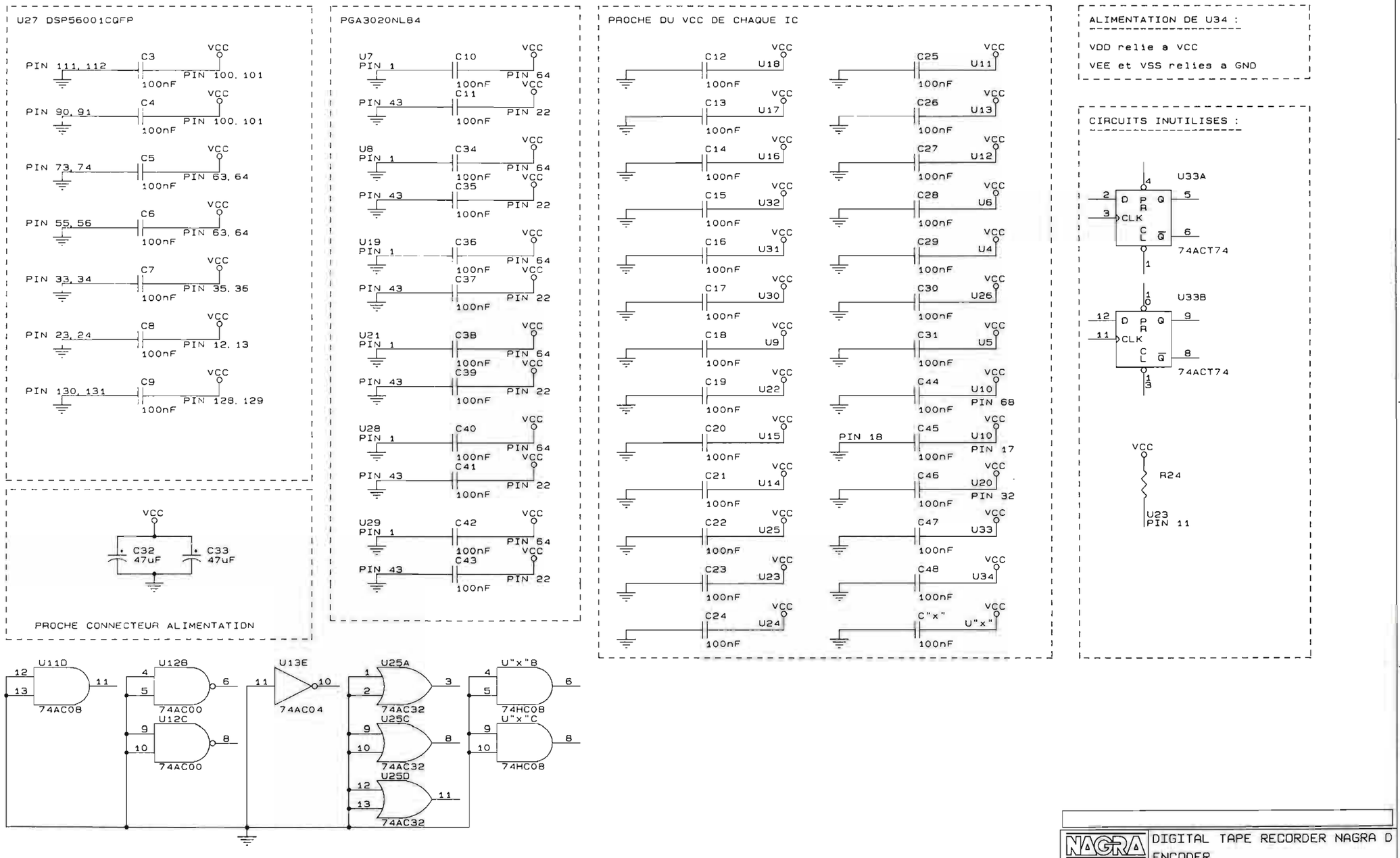

NAGRA	DIGITAL TAPE RECORDER NAGRA D
	ENCODER
	SCHEMATIC
	A25 0910360200 REV A
	RELEASE: 04-04-93 SCALE: ~ SHEET: 11/11

This drawing is confidential and may not be divulged in whole or in part to a third party

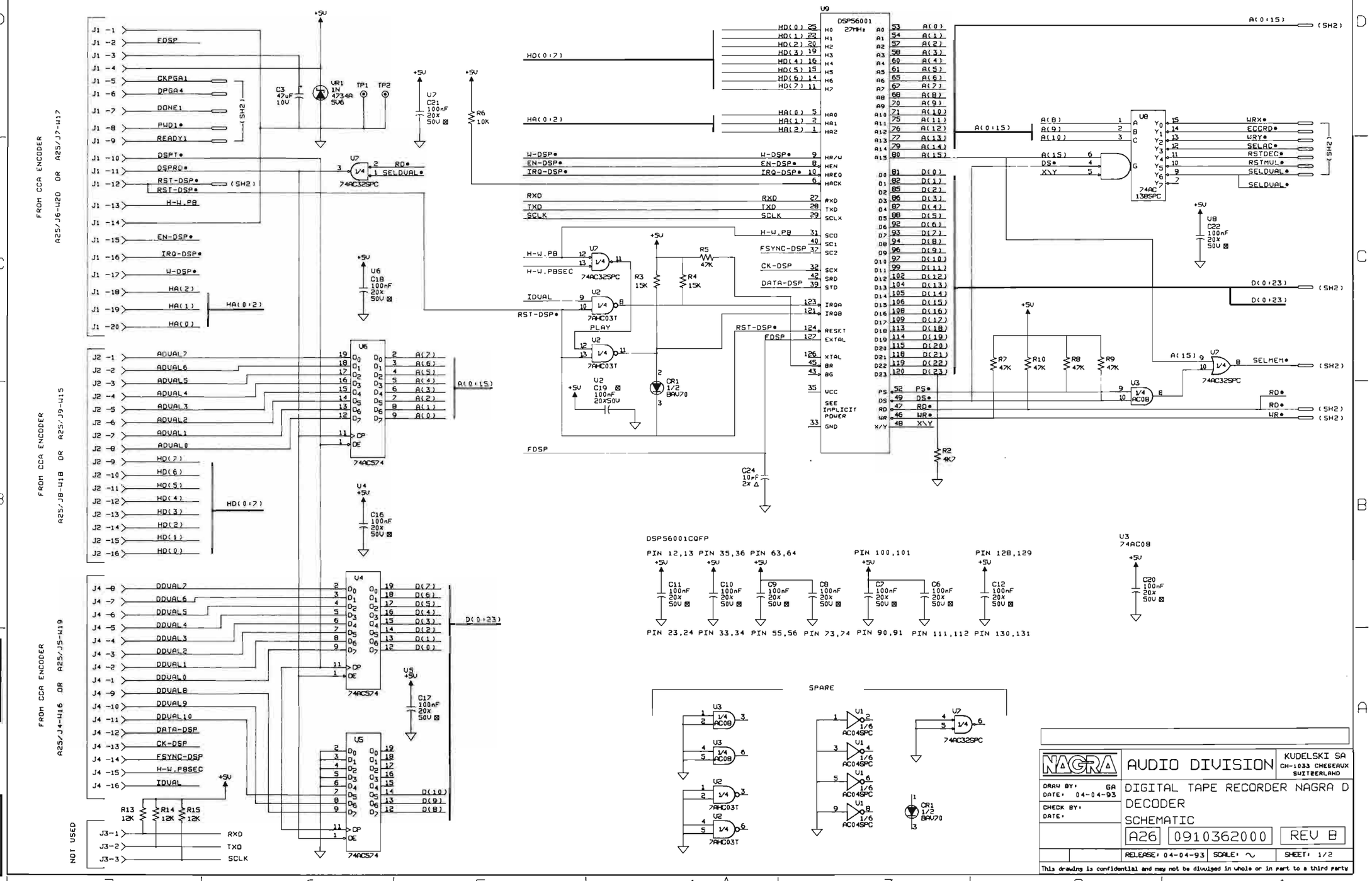
0910362000 [B]
1/2
FROM CCA ENCODER A25/J6-W20 OR A25/J7-W17
FROM CCA ENCODER A25/J8-W18 OR A25/J9-W15
FROM CCA ENCODER A25/J4-W16 OR A25/J5-W19
NOT USED
DSP56001 27MHz
DSP56001CQFP
PIN 12,13 PIN 35,36 PIN 63,64 PIN 100,101 PIN 128,129
PIN 23,24 PIN 33,34 PIN 55,56 PIN 73,74 PIN 90,91 PIN 111,112 PIN 130,131
SPARE
NAGRA
AUDIO DIVISION
KUDELSKI SA
CH-1033 CHESEAUX
SWITZERLAND
DRAW BY: GA
DATE: 04-04-93
CHECK BY:
DATE:
DIGITAL TAPE RECORDER NAGRA D
DECODER
SCHEMATIC
A26
0910362000
REV B
RELEASE: 04-04-93
SCALE: ~
SHEET: 1/2
This drawing is confidential and may not be divulged in whole or in part to a third party

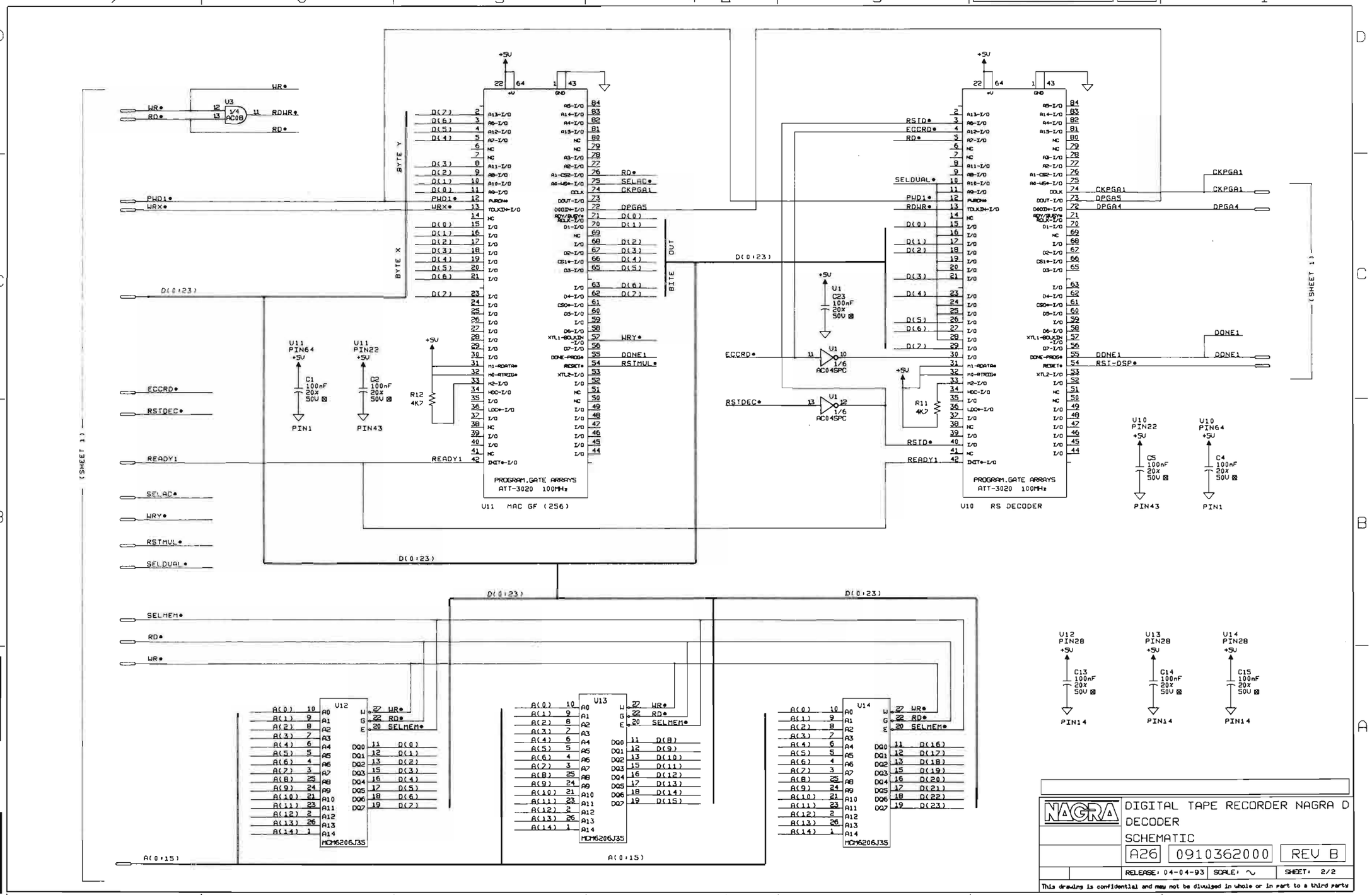

NAGRA

DIGITAL TAPE RECORDER NAGRA D
DECODER
SCHEMATIC

A26	0910362000	REV B
RELEASE: 04-04-93	SCALE: ~	SHEET: 2/2

This drawing is confidential and may not be divulged in whole or in part to a third party

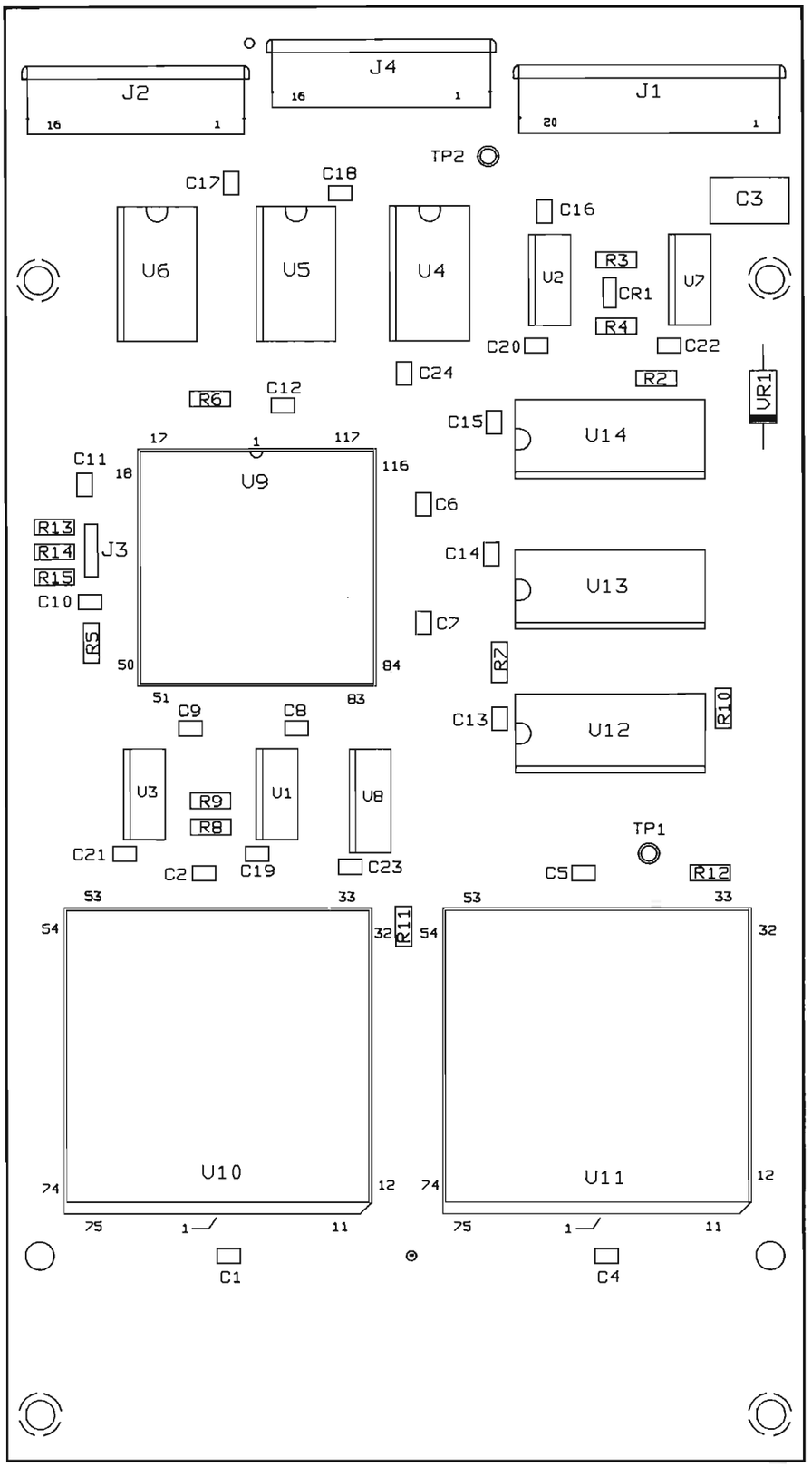

NAGRA	AUDIO DIVISION	KUDELSKI SA CH-1033 CHESEAUX SWITZERLAND
DRAW BY: GA DATE: 04-04-93	DIGITAL TAPE RECORDER NAGRA D DECODER PRINTED-WIRING ASSEMBLY	
CHECK BY: DATE:	A26 9110362000 REV B	
	RELEASE: 04-04-93 SCALE: ~	SHEET: 1 / 1

NAGRA

WARNING: HANDLE ONLY AT STATIC SAFE WORK STATION
ATTENTION: MANIPULATION UNIQUEMENT AUTORISEE SUR POSTE DE TRAVAIL PROTEGE
ACHTUNG: HANDHABUNG DANKER NUR AN BESCHÜTZTEN ARBEITSPLÄTZEN ERLAUBT

This drawing is confidential and may not be divulged in whole or in part to a third party

7

June 1994

9110366100 [A] 1/1

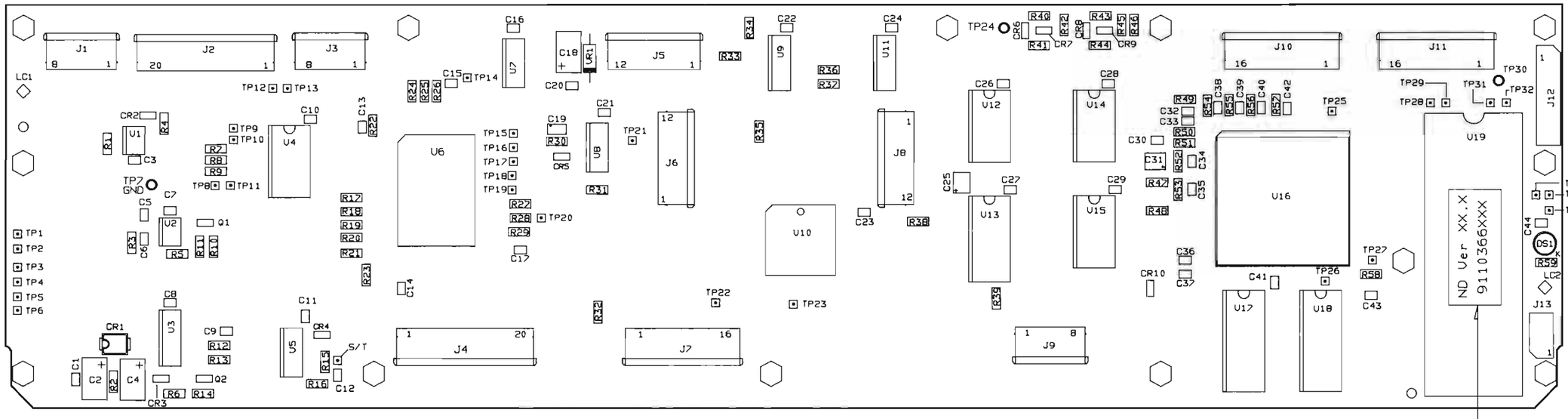

EPROM P/N & RELEASE

WARNING: HANDLE ONLY AT STATIC SAFE WORK STATION
ATTENTION: MANIPULATION UNIQUEMENT AUTORISEE SUR POSTE DE TRAVAIL PROTEGE
ACHTUNG: HANDHABUNG DAHER NUR AN GESCHÜTZTEN ARBEITSPLÄTZEN ERLAUBT

NAGRA	AUDIO DIVISION	KUDELSKI SA CH-1033 CHESEAUX SWITZERLAND
DRAW BY: JC DATE: 04-04-93	DIGITAL TAPE RECORDER NAGRA D	
CHECK BY: DATE:	CENTRAL PROCESSING UNIT	
	PRINTED-WIRING ASSEMBLY	
	A27 9110366100	REV A
	RELEASE: 04-04-93 SCALE: ~	SHEET: 1/1

This drawing is confidential and may not be divulged in whole or in part to a third party

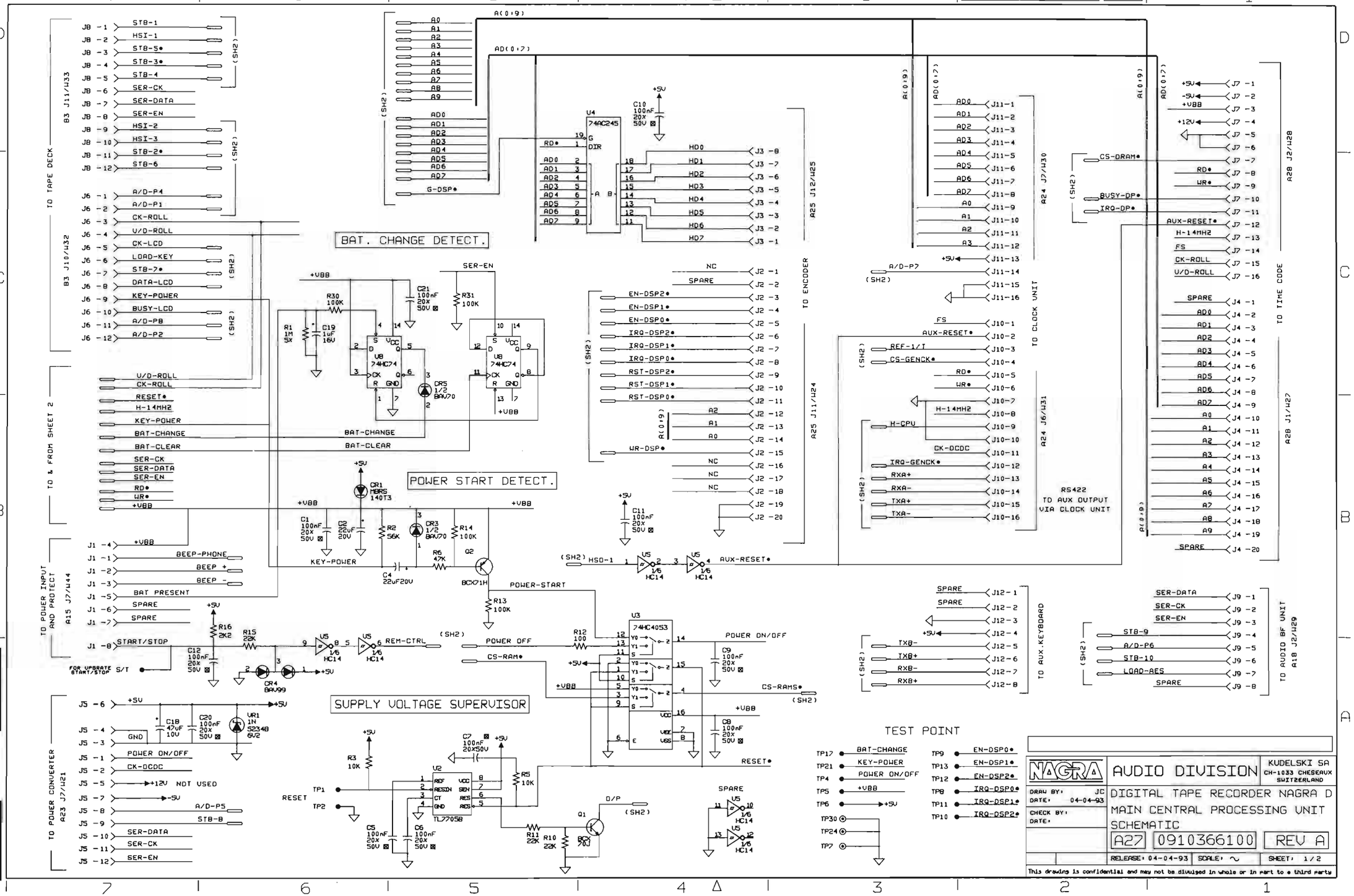
BAT. CHANGE DETECT.
POWER START DETECT.
SUPPLY VOLTAGE SUPERVISOR
TEST POINT
TO TAPE DECK
TO & FROM SHEET 2
TO POWER INPUT AND PROTECT
TO POWER CONVERTER
TO ENCODER
TO CLOCK UNIT
TO TIME CODE
TO AUX.KEYBOARD
TO AUDIO BF UNIT
RS422 TO AUX OUTPUT VIA CLOCK UNIT
NAGRA
AUDIO DIVISION
KUDELSKI SA
CH-1033 CHESEAUX SWITZERLAND
DRAW BY: JC
DATE: 04-04-93
CHECK BY:
DATE:
DIGITAL TAPE RECORDER NAGRA D
MAIN CENTRAL PROCESSING UNIT
SCHEMATIC
A27 0910366100 REV A
RELEASE: 04-04-93
SCALE: ~
SHEET: 1/2
This drawing is confidential and may not be divulged in whole or in part to a third party

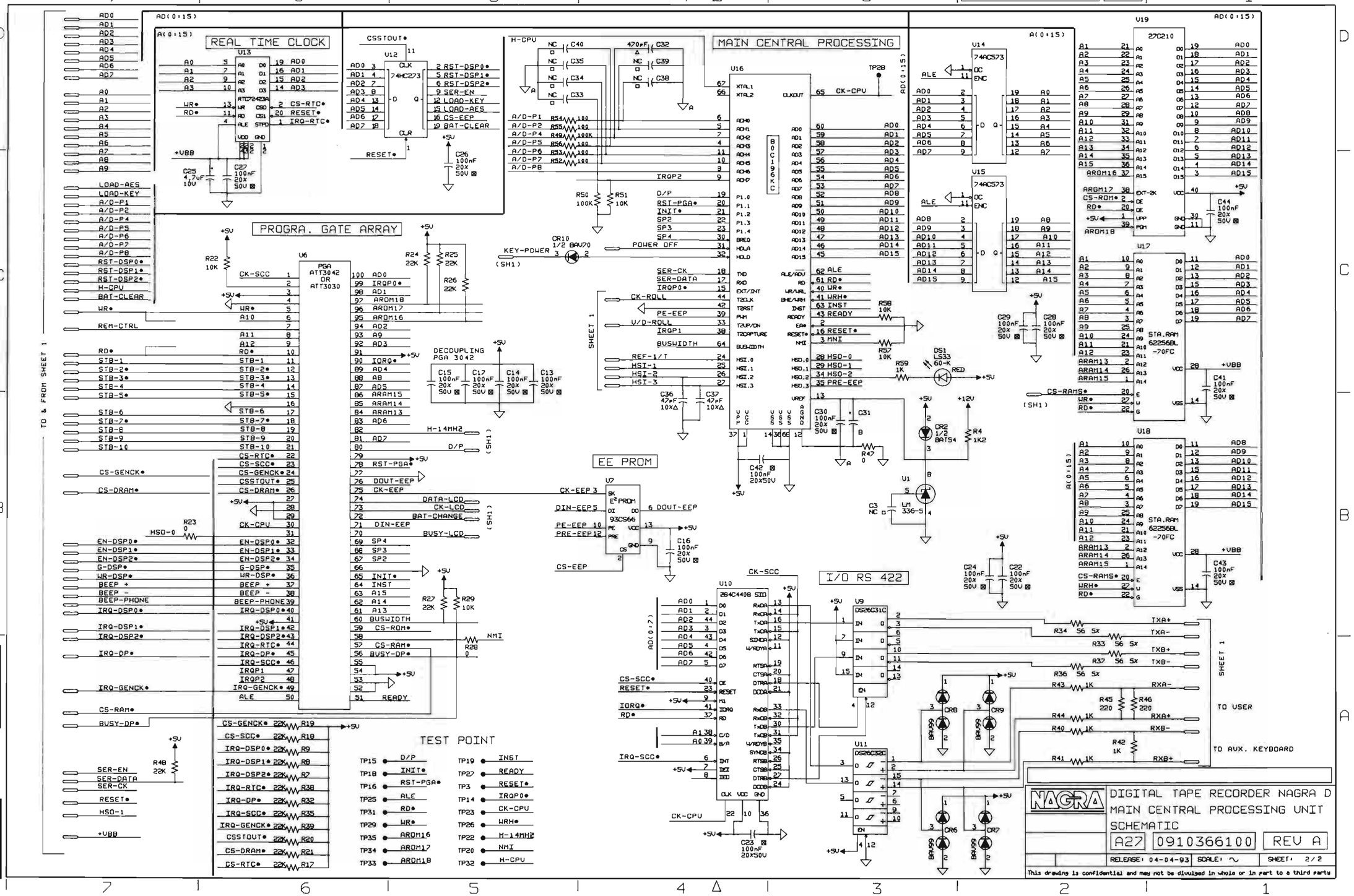
0910366100[A] 2/2
REAL TIME CLOCK
MAIN CENTRAL PROCESSING
PROGRA. GATE ARRAY
EE PROM
I/O RS 422
TEST POINT
TO & FROM SHEET 1
TO USER
TO AUX. KEYBOARD
NAGRA
DIGITAL TAPE RECORDER NAGRA D
MAIN CENTRAL PROCESSING UNIT
SCHEMATIC
A27 0910366100 REV A
RELEASE: 04-04-93 SCALE: ~ SHEET: 2/2
This drawing is confidential and may not be divulged in whole or in part to a third party

9110370000(B)

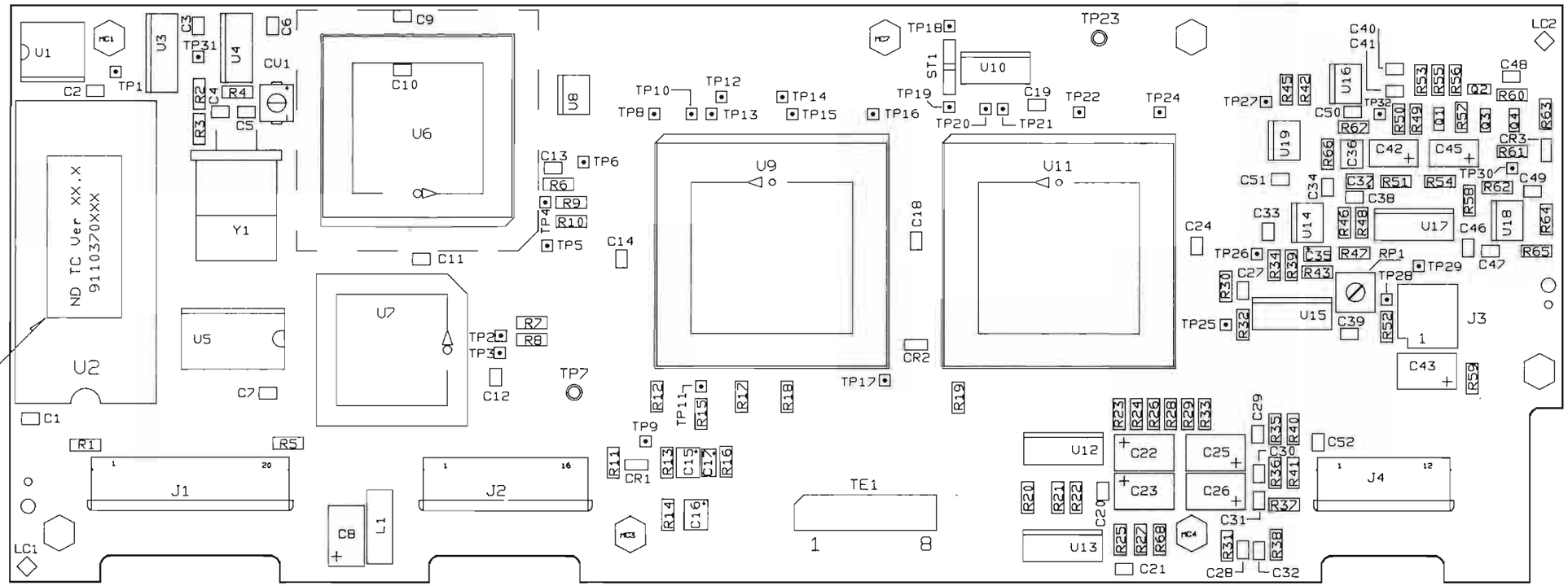

WARNING: HANDLE ONLY AT STATIC SAFE WORK STATION
ATTENTION: MANIPULATION UNIQUEMENT AUTORISEE SUR POSTE DE TRAVAIL PROTEGE
ACHTUNG: HANDHABUNG DAHER NUR AN GESCHÜTZTEN ARBEITSPLÄTZEN ERLAUBT

NAGRA	AUDIO DIVISION	KUDELSKI SA CH-1033 CHESEAUX SWITZERLAND
DRAW BY: JC DATE: 04-04-93	DIGITAL TAPE RECORDER NAGRA D	
CHECK BY: DATE:	TIME CODE UNIT	
	PRINTED-WIRING ASSEMBLY	
	A28 9110370000	REV B
	RELEASE: 04-04-93 SCALE: ~	SHEET: 1/1

This drawing is confidential and may not be divulged in whole or in part to a third party

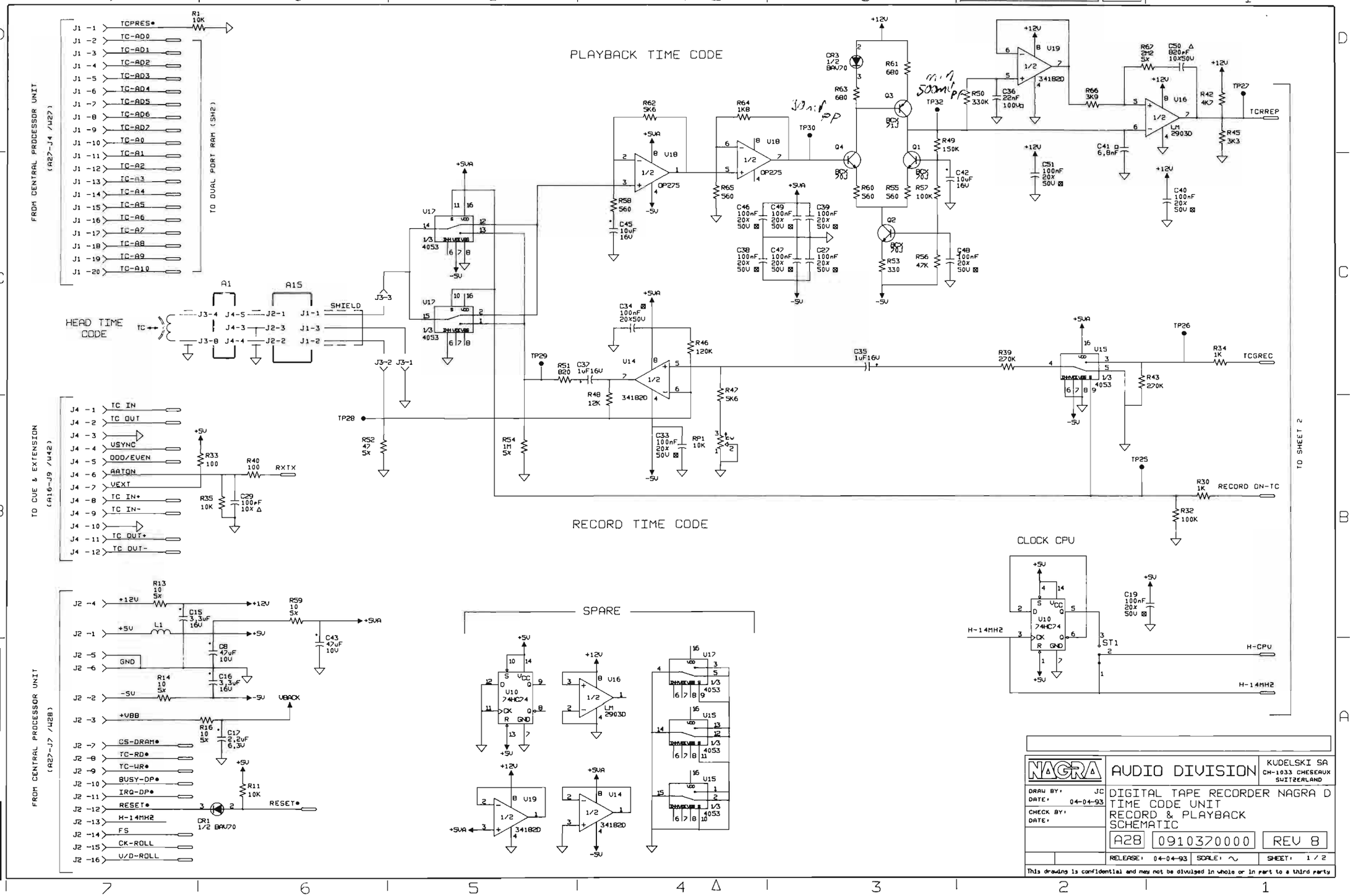

NAGRA	AUDIO DIVISION — KUDELSKI SA, CH-1033 CHESEAUX, SWITZERLAND
DRAW BY: JC DATE: 04-04-93	DIGITAL TAPE RECORDER NAGRA D TIME CODE UNIT RECORD & PLAYBACK SCHEMATIC
CHECK BY: DATE:	A28 — 0910370000 — REV B
	RELEASE: 04-04-93 — SCALE: ~ — SHEET: 1 / 2

This drawing is confidential and may not be divulged in whole or in part to a third party

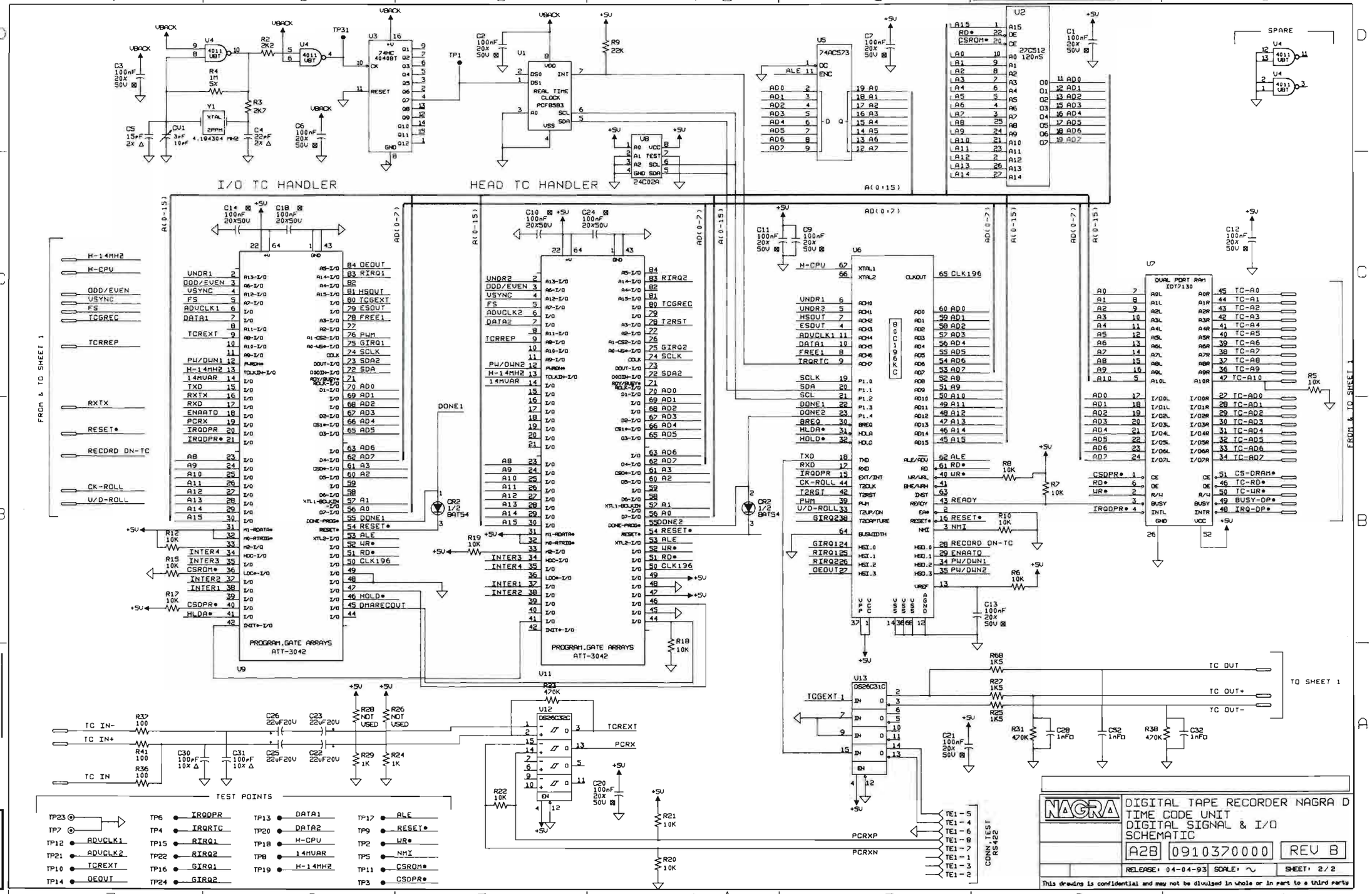
0910370000[B] 2/2
I/O TC HANDLER
HEAD TC HANDLER
SPARE
PROGRAM.GATE ARRAYS ATT-3042
DUAL PORT RAM IDT7130
REAL TIME CLOCK PCF8583
74AC573
27C512 120nS
24C02A
DS26C31C
DS26C32C
FROM & TO SHEET 1
TO SHEET 1
TEST POINTS
CONN.TEST RS422
TC OUT
TC OUT+
TC OUT-
TC IN-
TC IN+
TC IN
PCRXP
PCRXN
DONE1
NAGRA
DIGITAL TAPE RECORDER NAGRA D
TIME CODE UNIT
DIGITAL SIGNAL & I/O
SCHEMATIC
A2B 0910370000 REV B
RELEASE: 04-04-93 SCALE: ~ SHEET: 2/2
This drawing is confidential and may not be divulged in whole or in part to a third party

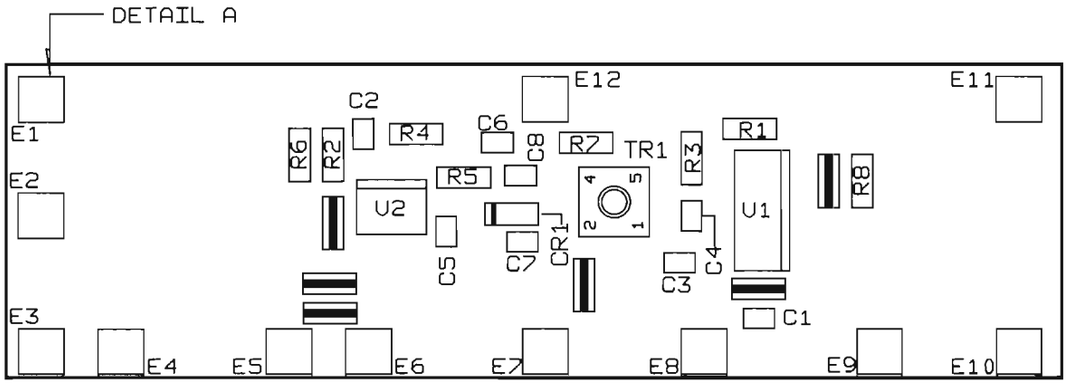

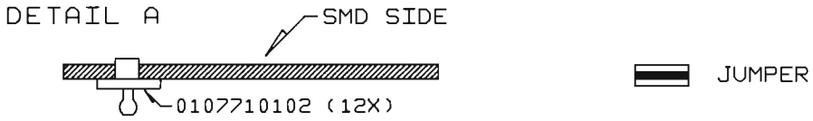

NOTES:

ASSEMBLAGE SUIVANT GAMME OPERATOIRE 9110369000(A)

SERTIR ET SOUDER LES CONTACTS (VOIR DETAIL A)

JUMPER SMD

WARNING: HANDLE ONLY AT STATIC SAFE WORK STATION
ATTENTION: MANIPULATION UNIQUEMENT AUTORISEE SUR POSTE DE TRAVAIL PROTEGE
ACHTUNG: HANDHABUNG DAHER NUR AN GESCHÜTZTEN ARBEITSPLÄTZEN ERLAUBT

NAGRA	AUDIO DIVISION	KUDELSKI SA CH-1033 CHESEAUX SWITZERLAND
DRAW BY: JC DATE: 06-04-93	DIGITAL TAPE RECORDER NAGRA D	
CHECK BY: DATE:	CLOCK GENERATOR VCLO 14MHz	
	PRINTED-WIRING ASSEMBLY	
	(A24) 9110369000	REV A
	RELEASE: 06-04-93 SCALE: ~	SHEET: 1/1

This drawing is confidential and may not be divulged in whole or in part to a third party

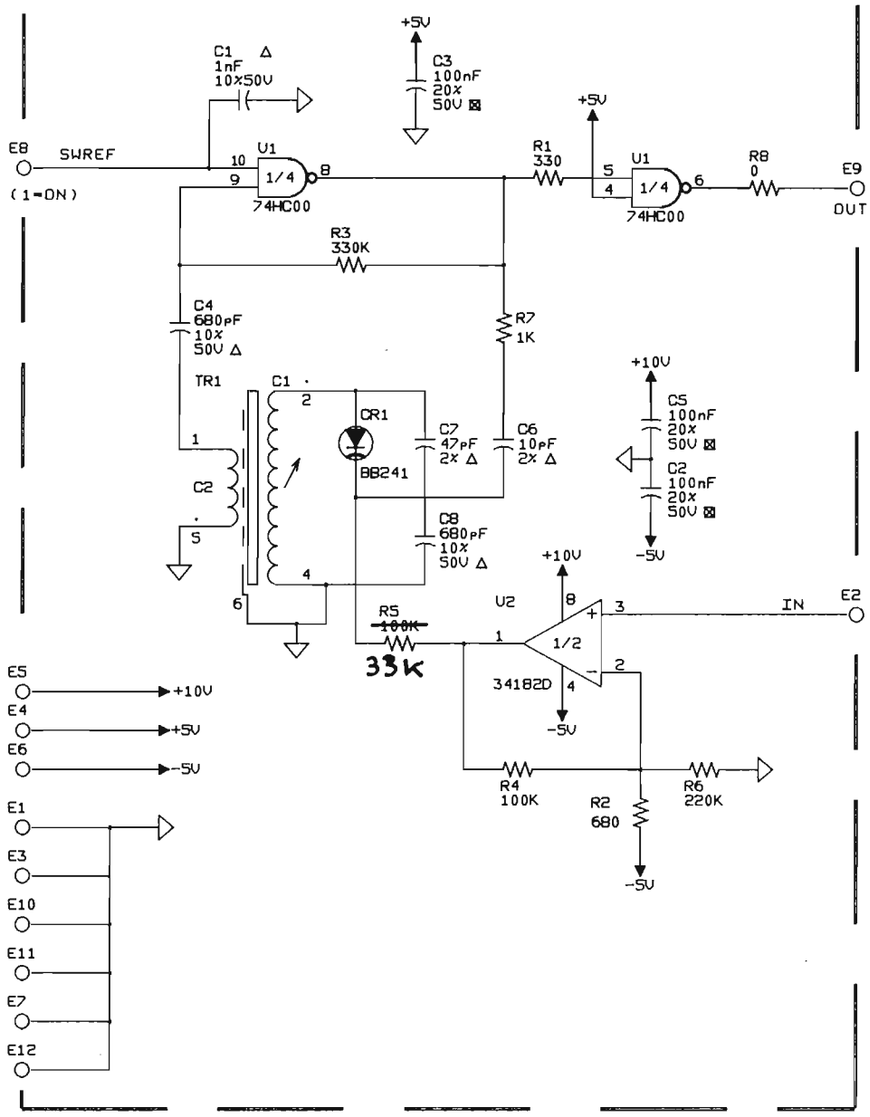

SPARE

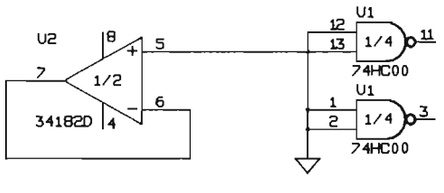

NAGRA	AUDIO DIVISION	KUDELSKI SA CH-1033 CHESEAUX SWITZERLAND
DRAW BY: JC DATE: 04-04-93	DIGITAL TAPE RECORDER NAGRA D CLOCK GENERATOR VCLO 14MHz SCHEMATIC	
CHECK BY: DATE:	(A24) 0910369000	REV A
	RELEASE: 04-04-93 SCALE: ~	SHEET: 1/2

This drawing is confidential and may not be divulged in whole or in part to a third party

8

June 1994

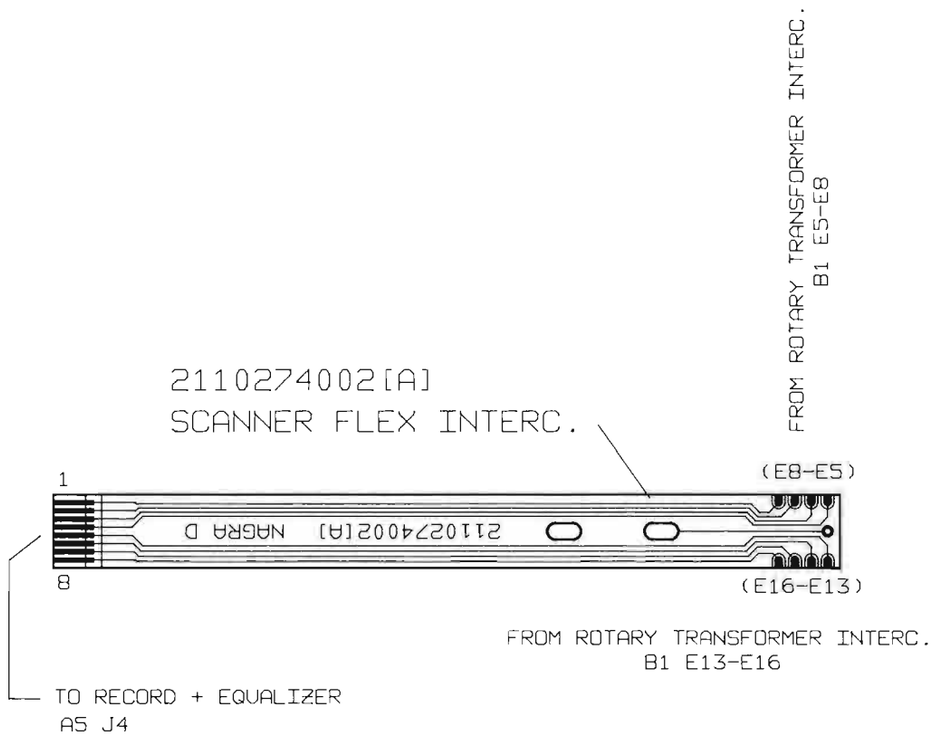

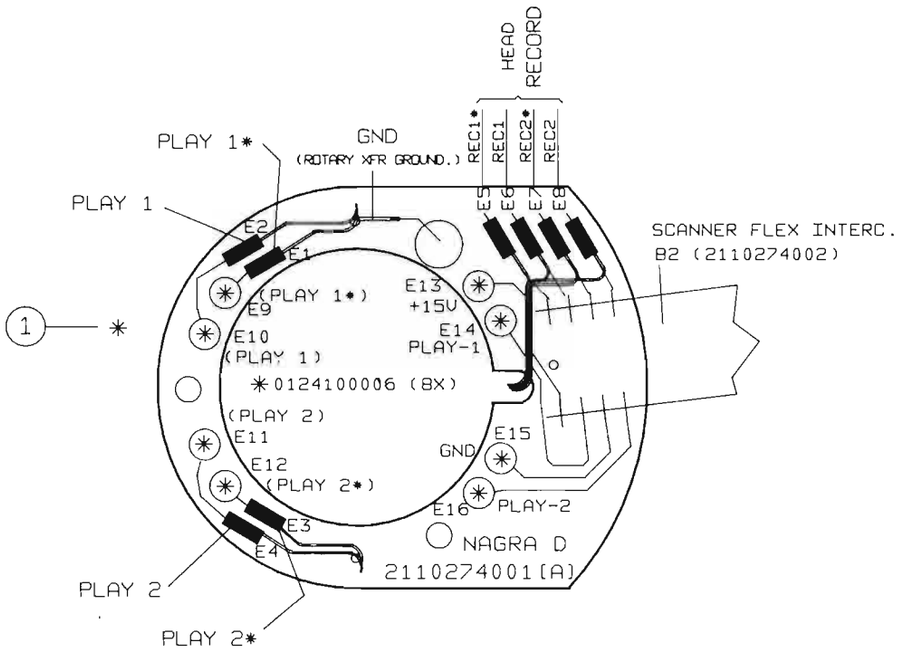

NOTES:

1. LES CONTACTS 0124100006 (8X) SONT MONTES AU GABARIT

ORDRE DES OPERATIONS DE MONTAGE:

- SERTIR LES CONTACTS ET LES SOUDER
- MONTER TRANSFO ROTATIF ET SOUDER LES FILS PLAY
- RECTIFIER LE TRANSFO
- SOUDER LE CIRCUIT SOUPLE 2110274002
- SOUDER LES FILS RECORD

WARNING: HANDLE ONLY AT STATIC SAFE WORK STATION
ATTENTION: MANIPULATION UNIQUEMENT AUTORISEE SUR POSTE DE TRAVAIL PROTEGE
ACHTUNG: HANDHABUNG DAHER NUR AN GESCHÜTZTEN ARBEITSPLÄTZEN ERLAUBT

NAGRA	AUDIO DIVISION	KUDELSKI SA CH-1033 CHESEAUX SWITZERLAND
DRAW BY: GA DATE: 04-04-93	DIGITAL TAPE RECORDER NAGRA D	
CHECK BY: DATE:	SCANNER FLEX INTERCON.	
	PRINTED-WIRING ASSEMBLY	
	B2 2110274002 REV A	
	RELEASE: 04-04-93 SCALE: ~ SHEET: 1 / 1	

This drawing is confidential and may not be divulged in whole or in part to a third party

NAGRA	AUDIO DIVISION	KUDELSKI SA CH-1033 CHESEAUX SWITZERLAND
DRAW BY: GA DATE: 04-04-93	DIGITAL TAPE RECORDER NAGRA D	
CHECK BY: DATE:	ROTARY TRANSFORMER INTERC.	
	PRINTED-WIRING ASSEMBLY	
	B1 9110274000 REV A	
	RELEASE: 04-04-93 SCALE: ~ SHEET: 1 / 1	

This drawing is confidential and may not be divulged in whole or in part to a third party

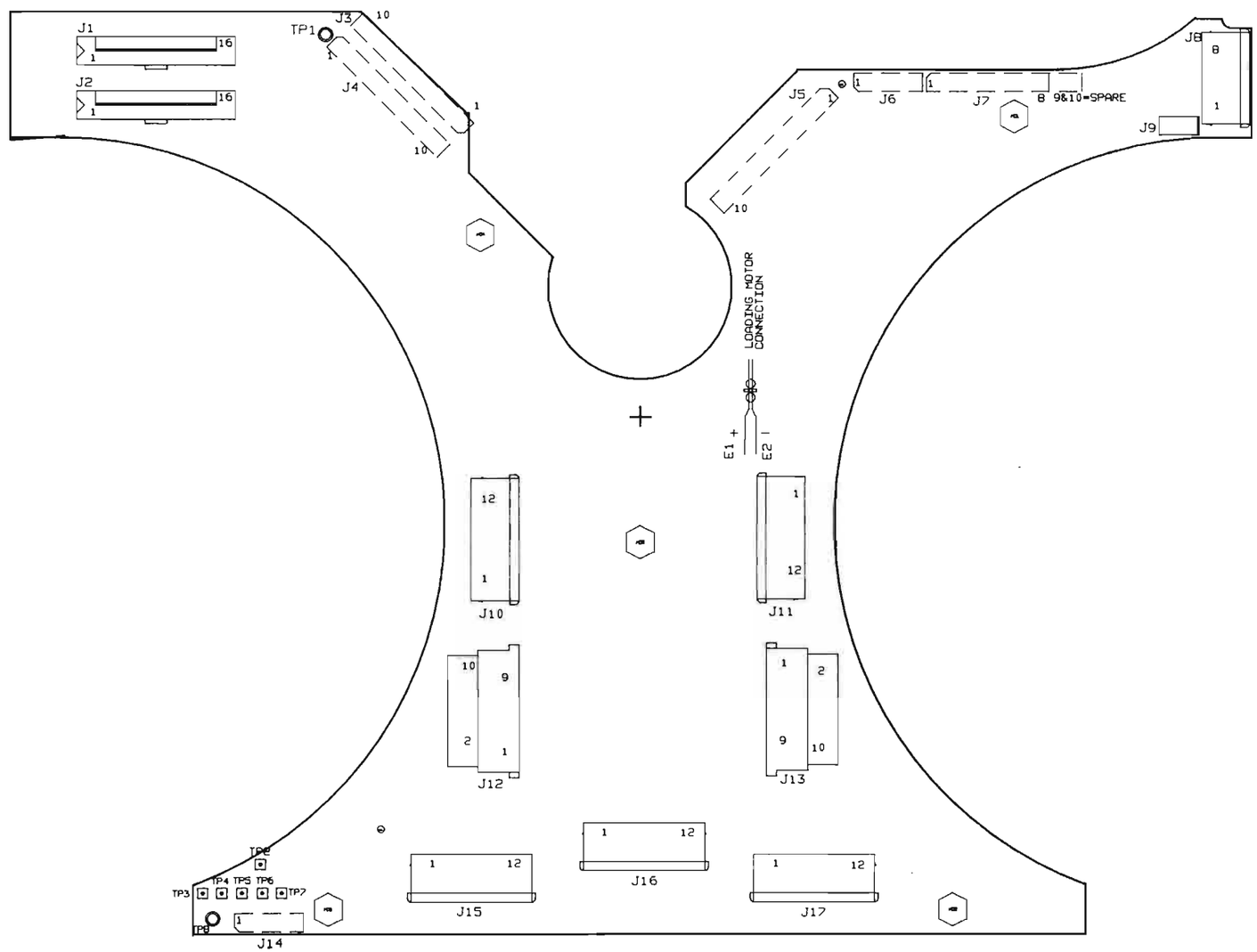

NOTA :LES CONNECTEURS J3,J4,J5,J6,J7,J14 SONT
MONTES COTE SOUDURE ET FONT PARTI DU CABLAGE 8110450000
COUPER LES PATTES DES ELEMENTS TRAVERSANTS A 0,5mm MAX

WARNING: HANDLE ONLY AT STATIC SAFE WORK STATION
ATTENTION: MANIPULATION UNIQUEMENT AUTORISEE SUR POSTE DE TRAVAIL PROTEGE
ACHTUNG: HANDHABUNG DAHER NUR AN GESCHÜTZTEN ARBEITSPLÄTZEN ERLAUBT

NAGRA	AUDIO DIVISION	KUDELSKI SA CH-1033 CHESEAUX SWITZERLAND
DRAW BY: GA DATE: 04-04-93	DIGITAL TAPE RECORDER NAGRA D INTERC. TAPE DECK	
CHECK BY: DATE:	PRINTED-WIRING ASSEMBLY	
	B3 9110257000 REV A	
	RELEASE: 04-04-93 SCALE: ~ SHEET: 1/1	

This drawing is confidential and may not be divulged in whole or in part to a third party

TO KEYBOARD
A3 J1/W56

J1 -1	KEY POWER
J1 -2	LOAD-KYBD
J1 -3	SER-CK
J1 -4	SER-DATA
J1 -5	SER-EN
J1 -6	STB-4
J1 -7	STB-7*
J1 -8	DATA-LCD
J1 -9	BUSY-LCD
J1 -10	CK-LCD
J1 -11	SPARE
J1 -12	+UNR.LIGHT
J1 -13	+5V
J1 -14	+15V
J1 -15	
J1 -16	

TO RECORD + EQUALIZER
A5 J3/W55

J2 -1	STB-3*
J2 -2	SPARE
J2 -3	SER-CK
J2 -4	SER-DATA
J2 -5	SER-EN
J2 -6	H-W.PB1
J2 -7	H-W.PB2
J2 -8	H-W.REC-INH
J2 -9	H-W.REC-I2
J2 -10	H-W.REC-I2
J2 -11	SPARE
J2 -12	-5V
J2 -13	+5V
J2 -14	+15V
J2 -15	+10V
J2 -16	GND

TO SCANNER & CAPSTAN SERVO
A7 J1/W60

J3 -10	SER-EN
J3 -9	STB-1
J3 -8	SER-CK
J3 -7	SER-DATA
J3 -6	A/D-P1
J3 -5	HSI-1
J3 -4	STB-5*
J3 -3	SPARE
J3 -2	H.8KHZ
J3 -1	H-W.REF-1/T

TO SCANNER & CAPSTAN SERVO
A7 J4/W61

TO POWER CONVERTER
A23 J2/W37

J5 -1	ACCEL	J13-1
J5 -2	F-METER	J13-2
J5 -3	-CAPSMOT	J13-3
J5 -4	+CAPSMOT	J13-4
J5 -5	CAPSPEED	J13-5
J5 -6	SPARE	J13-6
J5 -7	SERVO	J13-7
J5 -8	START	J13-8
J5 -9	+SCANMOT	J13-9
J5 -10	-SCANMOT	J13-10

TO SCANNER & CAPSTAN SERVO
A7 J6/W62

J7 -1	+5V
J7 -2	+12V
J7 -3	+12V
J7 -4	
J7 -5	
J7 -6	
J7 -7	
J7 -8	+15V

TO CLOCK GENERATOR
A6 J4/W54

J8 -8	+5V
J8 -6	+10V
J8 -5	-5V
J8 -7	GND
J8 -4	H-W.PB1
J8 -3	H-W.PB2
J8 -2	A/D-P4
J8 -1	H-NYC/16

TO CENTRAL PROCESS.UNIT
A27 J6/W32

J10-9	KEY-POWER
J10-6	LOAD-KYBD
J10-7	STB-7*
J10-8	DATA-LCD
J10-10	BUSY-LCD
J10-3	CK-ROLL
J10-4	V/D-ROLL
J10-2	A/D-P1
J10-12	A/D-P2
J10-11	NOT USED
J10-1	A/D-P4
J10-5	CK-LCD

TO CENTRAL PROCESS.UNIT
A27 J8/W33

J11-8	SER-EN
J11-6	SER-CK
J11-7	SER-DATA
J11-1	STB-1
J11-11	STB-2*
J11-4	STB-3*
J11-5	STB-4
J11-3	STB-5*
J11-12	NOT USED
J11-2	HSI-1
J11-9	HSI-2
J11-10	HSI-3

TO POWER CONVERTER
A23 J4/W36

J12-1	+12V
J12-2	+12V
J12-3	GND
J12-4	
J12-5	+UNR.LIGHT
J12-6	+5V
J12-7	-5V
J12-8	+10V
J12-9	+15V
J12-10	-15V

TO REEL MOTOR SERVO
A14 J4/W51

J15-1	+12V
J15-2	+12V
J15-3	SPARE
J15-4	GND
J15-5	
J15-6	+5V
J15-7	+15V
J15-8	SER-EN
J15-12	STB-2*
J15-10	SER-CK
J15-9	SER-DATA
J15-11	A/D-P2

TO REEL MOTOR SERVO
A14 J5/W52

J17-7	TD1
J17-8	TD4
J17-5	RTP
J17-6	LTP
J17-2	LOP
J17-4	ERASE ON
J17-3	SPARE
J17-12	HSI-2
J17-11	HSI-3
J17-1	H-T.DECK
J17-9	+MOTLOAD
J17-10	-MOTLOAD

TO CLOCK GENERATOR
A24 J1/W34

J16-12	H-8KHZ
J16-7	H-T.DECK
J16-10	
J16-11	H-NYC/16
J16-8	H-W.PB1
J16-9	H-W.PB2
J16-6	H-W.REC-I1
J16-5	H-W.REC-I2
J16-4	H-W.REC-INH
J16-3	H-W.REF-1/T
J16-2	
J16-1	SPARE

TO TAPE ROLLER & ERASE
A1 J1/W64

J4 -1	ERASE ON
J4 -2	+5V
J4 -7	CK-ROLL
J4 -8	V/D-ROLL
J4 -9	+15V
J4 -10	GND

TO SENSOR POSITION
(INTER.BOARD 10030039)

J4 TO A1 J1/W64 TO LEFT TENS.
J6 / W63 TO RIGHT TENS.
J14 / W65 TO TRANSFO DIFF. LOADING

J4 -3	TD1	LEFT TENS.
J4 -4	TD2	
J14-2		LOADING
J14-1	TD3	
J6 -4		
J6 -1	TD4	RIGHT TENS.
J4 -5		
J4 -6	LTP	LEFT TENS.
J14-3		
J14-4	LOP	LOADING
J6 -3		
J6 -2	RTP	RIGHT TENS.

TEST POINT

TP6	+5V
TP5	+12V
TP7	+15V
TP3	+10V
TP4	-5V
TP8 TP1	
TP2	+UNR LIGHT

TEST

J9 -1	W.PB1
J9 -2	W.PB2

LOADING MOTOR CONNECTION

E1	+MOTLOAD
E2	-MOTLOAD

NAGRA

AUDIO DIVISION
KUDELSKI SA
CH-1033 CHESEAUX
SWITZERLAND

DRAW BY: GA
DATE: 04-04-93
CHECK BY:
DATE:

DIGITAL TAPE RECORDER NAGRA D
INTERC. TAPE DECK
SCHEMATIC

B3 | 0910257000 | REV[A]

RELEASE: 04-04-93 | SCALE: ~ | SHEET: 1/1

This drawing is confidential and may not be divulged in whole or in part to a third party

9

June 1994

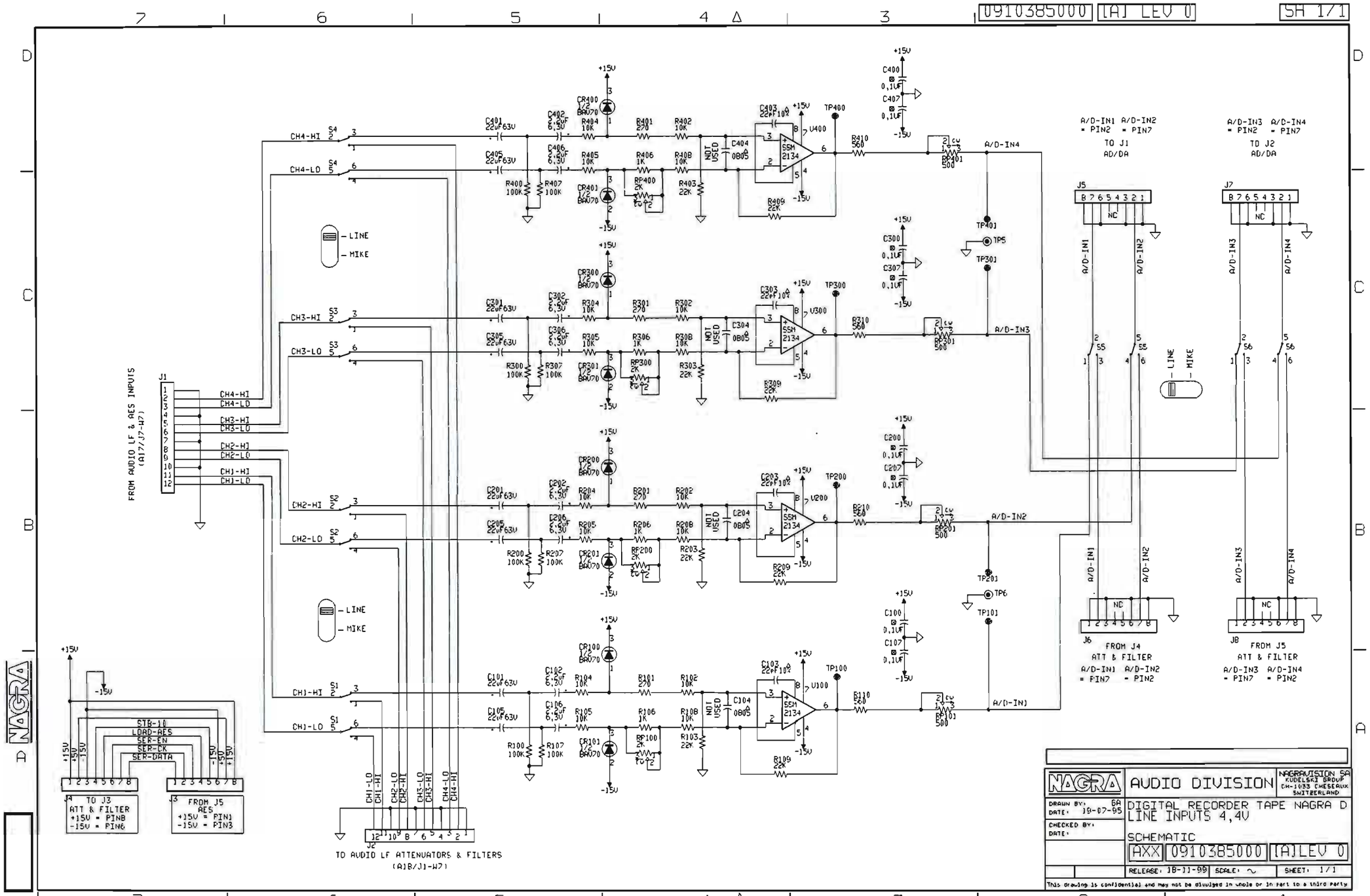
0910385000 [A] LEV 0
SH 1/1
FROM AUDIO LF & AES INPUTS (A)7/J7-W7)
J1
CH4-HI
CH4-LO
CH3-HI
CH3-LO
CH2-HI
CH2-LO
CH1-HI
CH1-LO
S4
S3
S2
S1
LINE
MIKE
C401 22uF63V
C402 2,2uF 6,3V
C404 0805
NOT USED
R400 100K
R407 100K
R404 10K
R405 10K
R401 270
R402 10K
R406 1K
R408 10K
RP400 2K
R403 22K
R409 22K
CR400 1/2 BAV70
CR401 1/2 BAV70
C403 22pF10V
V400
SSM 2134
TP400
R410 560
RP401 500
C400 0,1uF
C407 0,1uF
A/D-IN4
TP401
TP5
C301 22uF63V
C302 2,2uF 6,3V
C304 0805
R300 100K
R307 100K
R304 10K
R305 10K
R301 270
R302 10K
R306 1K
R308 10K
RP300 2K
R303 22K
R309 22K
CR300 1/2 BAV70
CR301 1/2 BAV70
C303 22pF10V
V300
TP300
R310 560
RP301 500
C300 0,1uF
C307 0,1uF
A/D-IN3
TP301
C201 22uF63V
C202 2,2uF 6,3V
C204 0805
R200 100K
R207 100K
R204 10K
R205 10K
R201 270
R202 10K
R206 1K
R208 10K
RP200 2K
R203 22K
R209 22K
CR200 1/2 BAV70
CR201 1/2 BAV70
C203 22pF10V
V200
TP200
R210 560
RP201 500
C200 0,1uF
C207 0,1uF
A/D-IN2
TP201
TP6
C101 22uF63V
C102 2,2uF 6,3V
C104 0805
R100 100K
R107 100K
R104 10K
R105 10K
R101 270
R102 10K
R106 1K
R108 10K
RP100 2K
R103 22K
R109 22K
CR100 1/2 BAV70
CR101 1/2 BAV70
C103 22pF10V
V100
TP100
R110 560
RP101 500
C100 0,1uF
C107 0,1uF
A/D-IN1
TP101
A/D-IN1 A/D-IN2
= PIN2 = PIN7
TO J1
AD/DA
A/D-IN3 A/D-IN4
= PIN2 = PIN7
TO J2
AD/DA
J5
J7
NC
J6
FROM J4
ATT & FILTER
A/D-IN1 A/D-IN2
= PIN7 = PIN2
J8
FROM J5
ATT & FILTER
A/D-IN3 A/D-IN4
= PIN7 = PIN2
+15V
-15V
STB-16
LOAD-AES
SER-EN
SER-CK
SER-DATA
J4
TO J3
ATT & FILTER
+15V = PIN8
-15V = PIN6
J3
FROM J5
AES
+15V = PIN1
-15V = PIN3
J2
TO AUDIO LF ATTENUATORS & FILTERS
(A)8/J1-W7)
NAGRA
AUDIO DIVISION
NAGRAVISION SA
KUDELSKI GROUP
CH-1033 CHESEAUX
SWITZERLAND
DRAWN BY: GA
DATE: 19-07-95
CHECKED BY:
DATE:
DIGITAL RECORDER TAPE NAGRA D
LINE INPUTS 4,4V
SCHEMATIC
AXX 0910385000 [A]LEV 0
RELEASE: 18-11-99
SCALE: ~
SHEET: 1/1
This drawing is confidential and may not be disclosed in whole or in part to a third party

9110385000[A]LEV 0 1/1

9110385000[A] | LEV 0 | SH 1/1

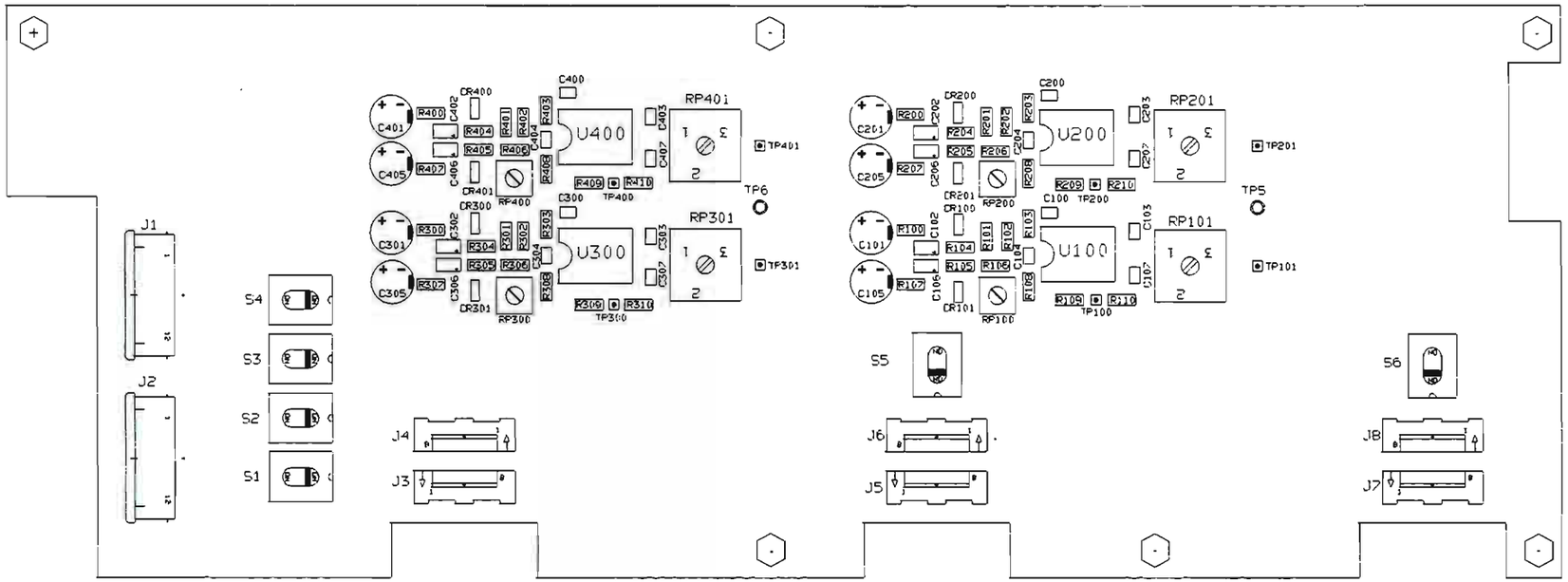

WARNING: HANDLE ONLY AT STATIC SAFE WORK STATION
ATTENTION: MANIPULATION UNIQUEMENT AUTORISEE SUR POSTE DE TRAVAIL PROTEGE
ACHTUNG: HANDHABUNG DAHER NUR AN GESCHÜTZTEN ARBEITSPLÄTZEN ERLAUBT

NAGRA

AUDIO DIVISION

NAGRAVISION SA
KUDELSKI GROUP
CH-1033 CHESEAUX
SWITZERLAND

DRAWN BY: JC
DATE: 19-11-99
CHECKED BY:
DATE:

DIGITAL TAPE RECORDER NAGRA D II
LINES INPUTS 4V4

PRINTED-WIRING ASSEMBLY

9110385000 [A]LEV 0

RELEASE: 19-11-99 | SCALE: ~ | SHEET: 1/1

This drawing is confidential and may not be divulged in whole or in part to a third party

0910755000 [B] LEV 1 1/1

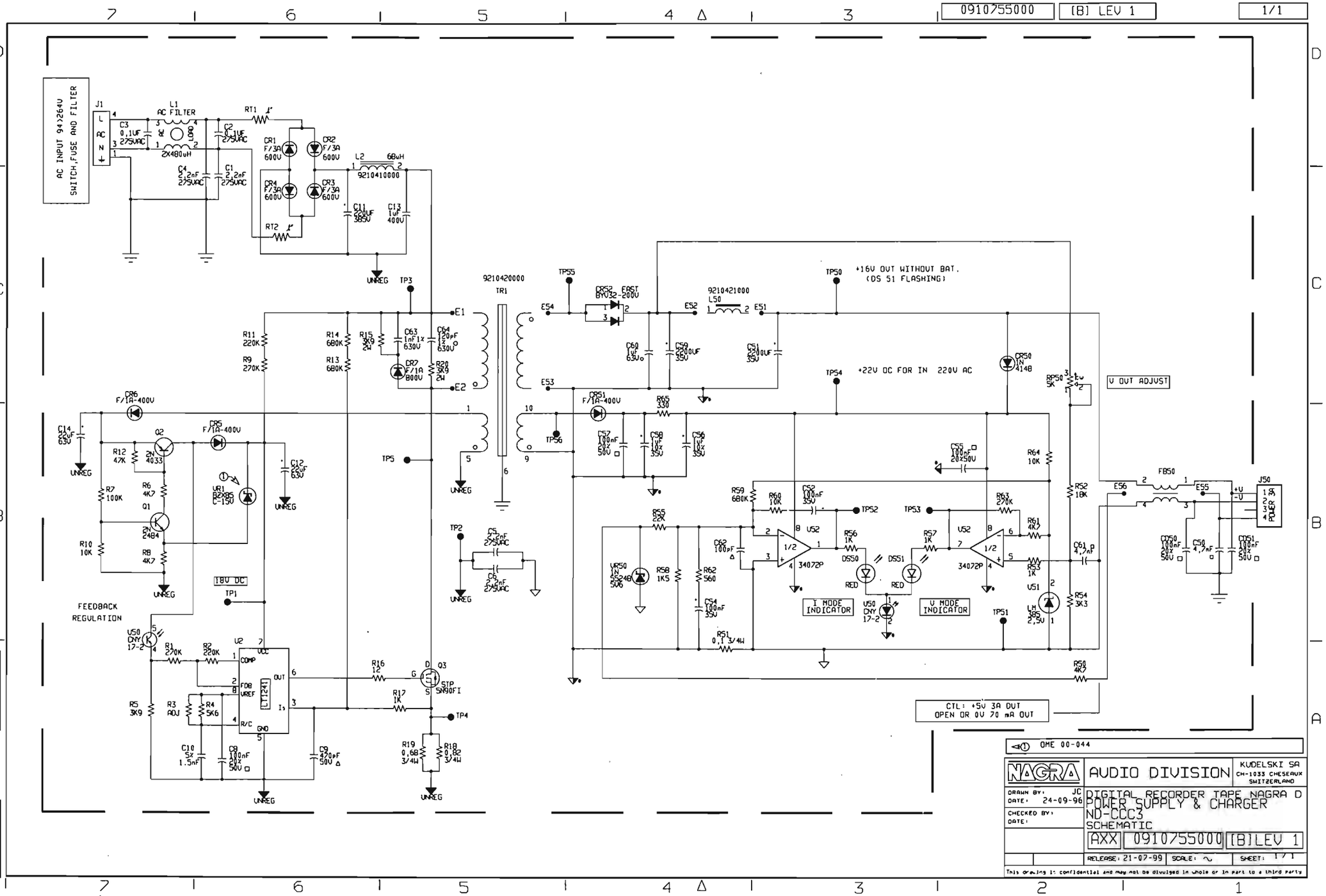

9155755000[B]LEV 1 1/1

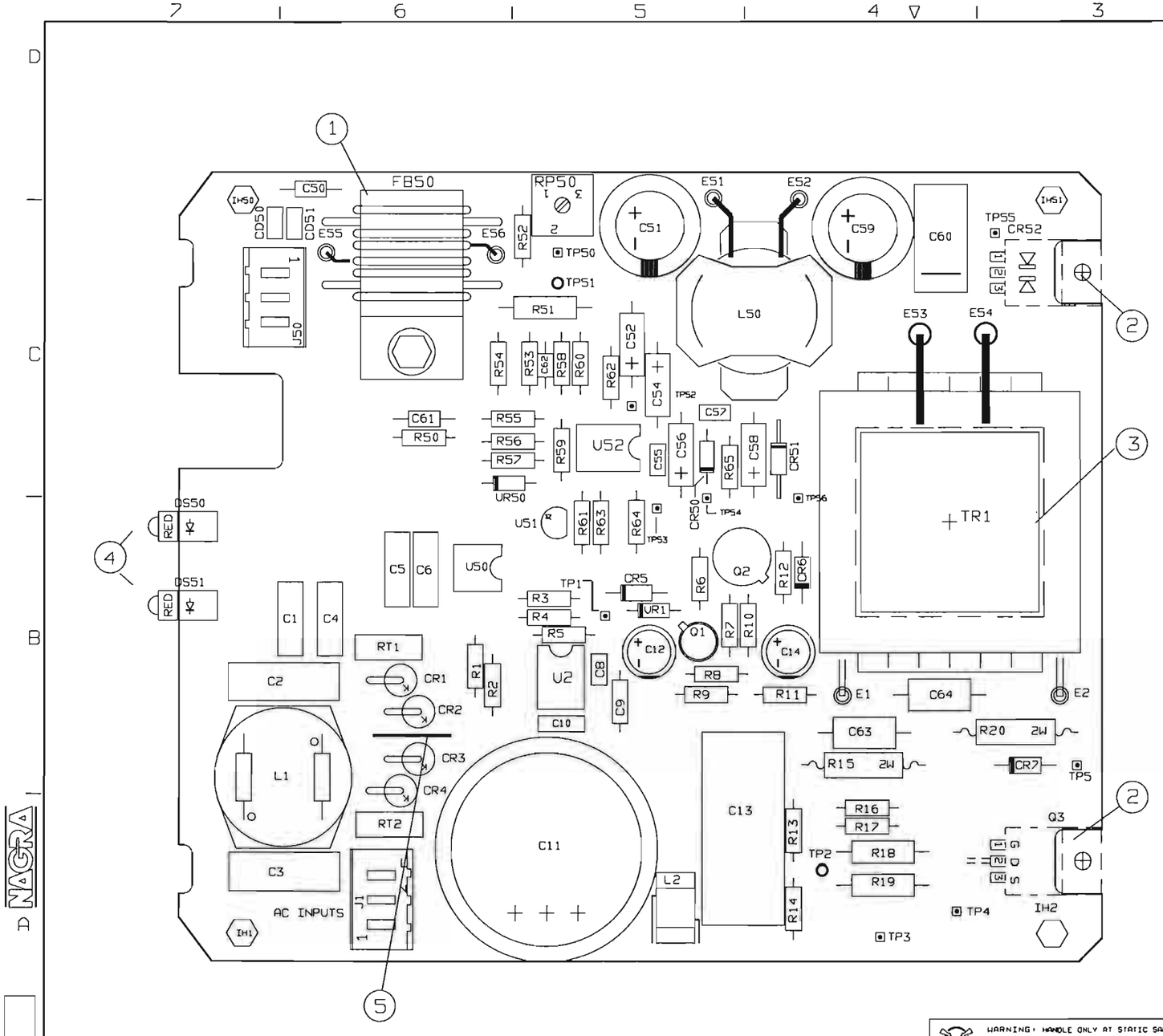

1 PERLE EMI DE SORTIE FB50

FAIRE 2,5 SPIRES AVEC FIL 0,75mm²

ROUGE 4206111122
BLANC 4200119999
BLEU 4206111166

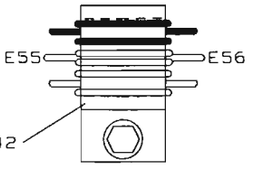

FIXATION SUR CIRCUIT (ASSURER LOCTITE)

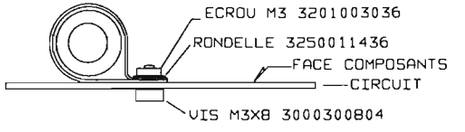

2 MONTAGE DE Q3, CR51

CES BOITIERS SONT ISOLES (PAS DE MICA)
A SOUDER DES 2 COTES AU GABARIT

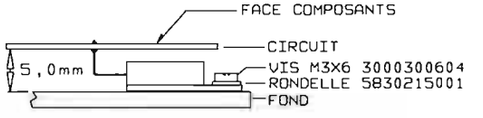

3 MONTAGE DU TRANSFO TR1 9210420000

MISE EN PLACE ET SOUDURE DES 5 PINS

- SOUDER LES FILS TORSADES (PRIMAIRE) SUR LES PYLONES A FOURCHE E1-E2
- SOUDER LES FILS TORSADES (SECONDAIRE) A TRAVERS LE CIRCUIT E53-E54

4 LED DS50,DS51 A SOUDER AU GABARIT

5 PONT EN FIL RIGIDE (0,8) 4210000080

WARNING: HANDLE ONLY AT STATIC SAFE WORK STATION
ATTENTION: MANIPULATION UNIQUEMENT AUTORISEE SUR POSTE DE TRAVAIL PROTEGE
ACHTUNG: HANDHABUNG DAHER NUR AN GESCHÜTZTEN ARBEITSPLÄTZEN ERLAUBT

OME 00-044 VR1

NAGRA AUDIO DIVISION
KUDELSKI SA
CH-1033 CHESEAUX SWITZERLAND

DRAWN BY: JC
DATE: 28-10-96
CHECKED BY:
DATE:

NAGRA DIGITAL
POWER SUPPLY & CHARGER

PRINTED-WIRING ASSEMBLY

9155755000 [B]LEV -

RELEASE: 21-07-99 SCALE: ~ SHEET: 1/1

This drawing is confidential and may not be divulged in whole or in part to a third party

ND-CCC **obsolete**

CNB electronique		
Title: CHARGEUR NAGRA AC\DC		
Size: A3	Number: CN88-AC/DC	Revision
Date: 26-JUL-1993 File: CN88-AC/1	Sheet of	Drawn By:

ND-CCC2
1ére version (sans sérigraphie)

CNB ELECTRONIQUE	
CHARGEUR NAGRA AC/DC CIRCUIT PRIMAIRE	
REF:CN88 1A NA	14-02-96

ND-CCC2
2eme version (avec sérigraphie)

CNB ELECTRONIQUE	
CHARGEUR NAGRA AC/DC CIRCUIT PRIMAIRE	
REF:CN88 1B NA	14-02-96

ND-EPC
1ére version

CNB electronique		
Title: CHARGEUR NAGRA DC/DC		
Size: A3	Number: CN88-DC/DC	Revision
Date: 26-JUL-1993 File: CN88SCH/	Sheet of	Drawn By:

ND-EPC
2eme version (Réf CN-88)

CNB ELECTRONIQUE	
CHARGEUR NAGRA DC/DC	
REF: ND — EPC	05—07—93

ELECTRONIQUE

KSA 20 10500 000

CHARGEUR NAGRA AC/DC CN88

ELECTRONIQUE

DOSSIER TECHNIQUE DU CHARGEUR NAGRA AC/DC CN88 COMPRENANT :

. SCHEMA DE PRINCIPE .....PAGE 1

. IMPLANTATION DES COMPOSANTS ..... PAGE 2

. TRACE DU CIRCUIT IMPRIME ..... PAGE 3

. LISTE DES COMPOSANTS - RESISTANCES ..... PAGE 4

. LISTE DES COMPOSANTS - CONDENSATEURS
SEMI-CONDUCTEURS ET DIVERS .....PAGE 5

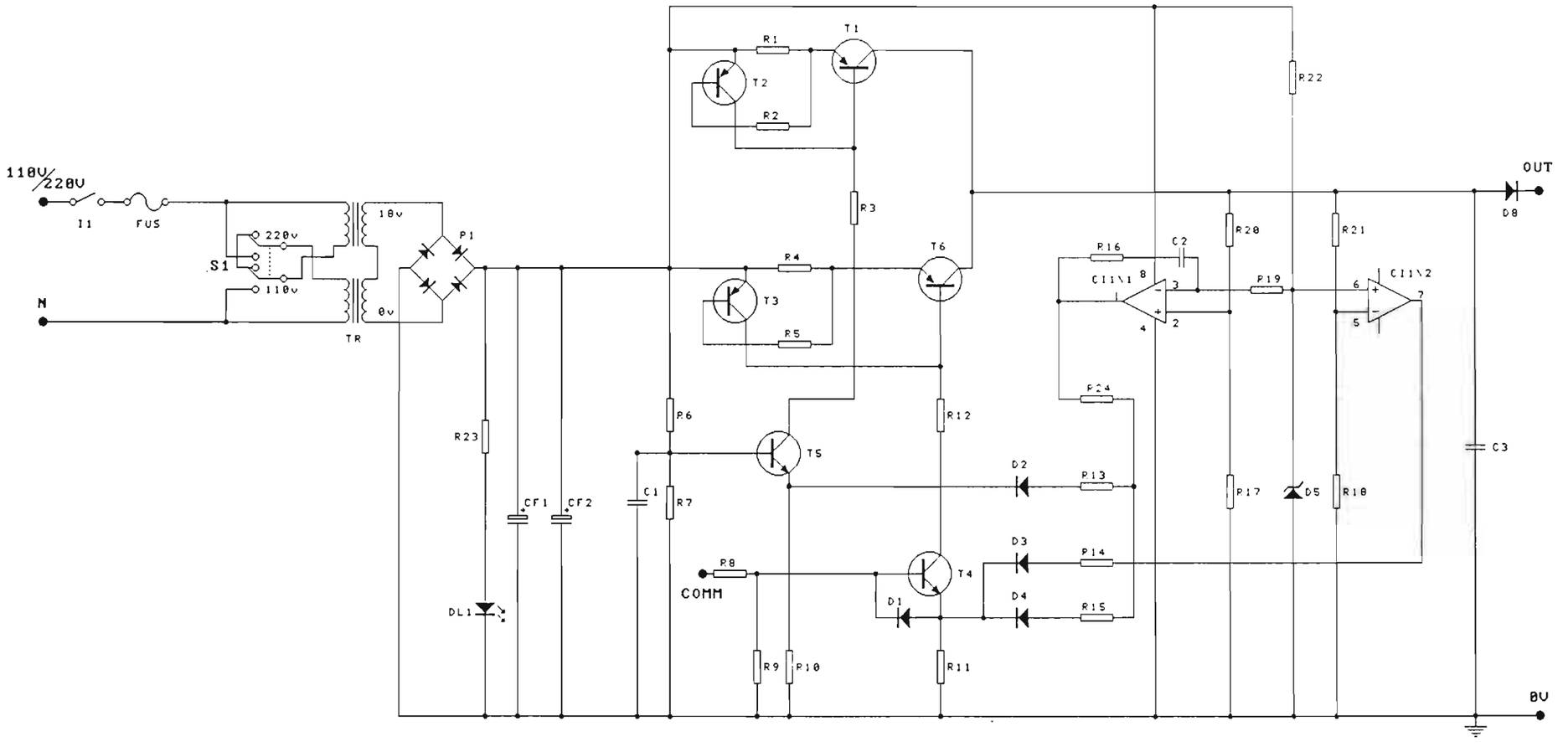

CNB electronique		
Title: CHARGEUR NAGRA AC\DC		
Size: A3	Number: CN88-AC/DC	Revision
Date: 26-JUL 1993		Sheet of
File: CN88-AC/1		Drawn By:

ELECTRONIQUE

- LISTE DES COMPOSANTS DU CHARGEUR CN88 -

- RESISTANCES :

REF.	VALEUR	TOLERANCE	PUISSANCE
R1	20 ohm	1 %	1/4 W
R2	3.3 K ohm	5 %	1/4 W
R3	33 K ohm	5 %	1/4 W
R4	0.22 ohm	5 %	3 W
R5	3.4 K ohm	1 %	1/4 W
R6	62 K ohm	5 %	1/4 W
R7	11.8 K ohm	1 %	1/4 W
R8	33 K ohm	5 %	1/4 W
R9	91 K ohm	5 %	1/4 W
R10	2.32 K ohm	1 %	1/4 W
R11	4.7 K ohm	5 %	1/4 W
R12	10 K ohm	5 %	1/4 W
R13	6.8 K ohm	5 %	1/4 W
R14	6.8 K ohm	5 %	1/4 W
R15	6.8 K ohm	5 %	1/4 W
R16	100 K ohm	5 %	1/4 W
R17	7.68 K ohm	1 %	1/4 W
R18	7.68 K ohm	10 %	1/4 W
R19	10 K ohm	5 %	1/4 W
R20	15 K ohm	1 %	1/4 W
R21	2.8 K ohm	1 %	1/4 W
R22	5.1 K ohm	5 %	1/4 W
R23	3.9 K ohm	5 %	1/4 W
R24	3.3 ohm	5 %	1/4 W

- LISTES DES COMPOSANTS CN88 SUITE -

IND.	VALEUR	TENSION SERVICE
CONDENSATEURS		
C1	22 µF	25 V
C2	0.47 µF	63 V
C3	22 µF	25 V
CF1	4700 µF	35 V
CF2	4700 µF	35 V
IND.	REFERENCE	FABRICANT
SEMI - CONDUCTEURS		
D1	BAV 21	ITT
D2	BAV 21	ITT
D3	BAV 21	ITT
D4	BAV 21	ITT
D5	ZENER 5.6 V	ITT
D8	PBYR 1045	PHILIPS
P1	BR 64. 6A 400V	RECTRON
CI1	LM 358	THOMSON
T1	TIP 30 C	TEXAS
T2	2N 2907 A	PHILIPS
T3	2N 2907 A	PHILIPS
T4	2N 2222 A	PHILIPS
T5	2N 2222 A	PHILIPS
T6	TIP 145	MOTOROLA
DIVERS		
TR	CN88TRAC	CNB EL.
S1	MT222	EEE
I1	I11185	EEE
FUS	SST26	Kautt & Bux

ELECTRONIQUE

DOSSIER TECHNIQUE DU CHARGEUR CN888 DC/DC COMPRENANT :

. SCHEMA DE PRINCIPE ..... PAGE 1

. IMPLANTATION DES COMPOSANTS ..... PAGE 2

. TRACE DU CIRCUIT IMPRIME..... PAGE 3

. LISTE DES COMPOSANTS . RESISTANCES ..... PAGE 4

. "" "" CONDENSATEURS..... PAGE 5

"" "" SEMI CONDUCTEUR + DIVERS..... PAGE 6

ELECTRONIQUE

CHARGEUR NAGRA DC/DC

ALIMENTATION : NAGRA CN88 1B NA

SEMI-CONDUCTEURS

IND	TYPE	FABRICANT
CI1	SI 9120 DJ	SILICONIX
CI2	CQY80N	TFK
CI3	LM 358 N	S/T
CI4	LM 358 N	S/T
CI5	TL 431 C	MOTO - TEXAS
TR1	BUZ 80 FI	S/T
TR2	2N2222A	ITT - PH
EC	~~VE240251K~~ VE242250K	THOMSON

DIVERS

TR1	TR1-NAG-DEC1A	CNB ELECTRONIQUE
L1	L1-NAG-DEC1A	CNB ELECTRONIQUE
L2	L2-NAG-DEC1A	CNB ELECTRONIQUE
L3	3732221340	SEEM
L4	L4-NAG-DEC1A	CNB ELECTRONIQUE
DISS	WA 420 L=42mm	SCHAFFNER

2 RUE DE LA SOURCE - 25620 MAMIROLLE - TEL : 81 55 84 81 - TELEX 361 806 - FAX : 81 55 83 03

ELECTRONIQUE

ALIMENTATION : NAGRA CN88 1B NA

CONDENSATEURS

IND	VALEUR	TENS SERV	TYPE	FABRICANT
C26	1uF	63V		
C27	NI			
C28	NI			
C29	47nF	63V		
C30	47nF	63V		
C31	47nF	63V		
C32	NI			
C33	NI			
C34	NI			
C35	.47uF	63V		

DIODES

D1			1N4007	ITT
D2			1N4007	ITT
D3			1N4007	ITT
D4			1N4007	ITT
D5			BAV21	ITT
D6			BYT11-1000	S/T
D7			BYT11-1000	S/T
D8			BYW51-200	S/T
D9			BAV21	ITT
D10			BAV21	ITT
D11			1N4007	ITT
D12			1N4007	ITT
D13			BAV21	ITT
D14			BAV21	ITT
D15			BAV21	ITT
DZ1			BZX55C13	PH
DZ2			BZX55C5.6	PH

2 RUE DE LA SOURCE 25620 MAMIROLLE - TEL 81 55 94 84 - TELEX 361 806 - FAX 81 55 83 03

ELECTRONIQUE

ALIMENTATION :NAGRA CN88 1B NA

CONDENSATEURS

IND	VALEUR	TENS SERV	TYPE	FABRICANT
C1	.22uF	250V AC	X2	
C2	.22uF	250V AC	X2	
C3	.1uF	250V AC	X2	
C4	2.2nF	250V AC	Y	
C5	2.2nF	250V AC	Y	
C6	2.2nF	250V AC	Y	
C7	220uF	200V		
C8	220uF	200V		
C9	47uF	25V		
C10	220nF	50V		
C11	.47uF-1uF	63V		
C12	470pF	100V		
C13	10nF	100V		
C14	1uF	63V		
C15	1nF	500V		
C15'	1nF	500V		
C16	1nF	500V		
C16'	1nF	500V		
C17	NI			
C17'	220pF	100V		
C18	220pF	100V		
C19	1uF	63V		
C20	NI			
C21	NI			
C22	10nF	100V		
C23	10nF	100V		
C24	NI			
C25	1000uF	25V		

2 RUE DE LA SOURCE - 25620 MAMIROLLE - TEL 81 55 84 44 - TELEX 361 805 - FAX 81 55 83 03

ALIMENTATION : NAGRA CN88 1B NA

RESISTANCES

IND	VALEUR	TOL	PUISSANCE	TYPE	FABRICANT
R29	18 K	2	.25 W	MR25	
R30	7.5 K	1	.25 W	MR25	
R31	1.8 K	5	.25 W	SFR25	
R32	2.2 M	5	.25 W	SFR25	
R33	10 K	5	.25 W	SFR25	
R34	2.61 K	1	.25 W	MR25	
R35	5.1 K	5	.25 W	SFR25	
R36	5.1 K	5	.25 W	SFR25	
R37	NI				
R38	33 R	5	.25 W	SFR25	
R39	NI				
R40	NI				
RCL	.1 R	1	3W	LVR3-15	

102 RUE DE LA SOURCE - 25620 MAMIROLLE - TEL: 81.55.84.84 - TELEX 361 806 - FAX: 81.55.83.03

ALIMENTATION : NAGRA CN88 1B NA

RESISTANCES

IND	VALEUR	TOL	PUISSANCE	TYPE	FABRICANT
R1	.47 R	5	3 W	RB59	
R2	.47 R	5	3 W	RB59	
R3	27.4 K	1	.25 W	MR25	
R4	NI				
R5	390 K	5	.25 W	SFR25	
R6	523 R	1	.25 W	MR25	
R7	1.5 R	5	1 W	PR01	
R8	AJH 2.2R 7.5R	5			
R9	~~120 R~~ 3Ω3	5	.25 W	SFR25	
R10	27.4 K	1	.25 W	MR25	
R11	220 R	5	.25 W	SFR25	
R12	680 R	5	2 W	PR02	
R13	150 K	5	.25 W	SFR25	
R14	150 K	5	.25 W	SFR25	
R15	15 K	5	2 W	PR02	
R16	154 K	1	.25 W	MR25	
R17	AJH 470K-2.2M	5	.25 W	SFR25	
R18	1.6 K	5	.25 W	SFR25	
R19	27.4 K	1	.25 W	MR25	
R20	22 K	5	.25 W	SFR25	
R21	5.1 K	5	.25 W	SFR25	
R22	523 R	1	.25 W	MR25	
R23	1 K	5	.25 W	SFR25	
R24	330 R	5	.25 W	SFR25	
R25	1.6K	5	.25 W	SFR25	
R26	27.4 K	1	.25 W	MR25	
R27	5.1 K	5	.25 W	SFR25	
R28	3.4 K	1	.25 W	SFR25	

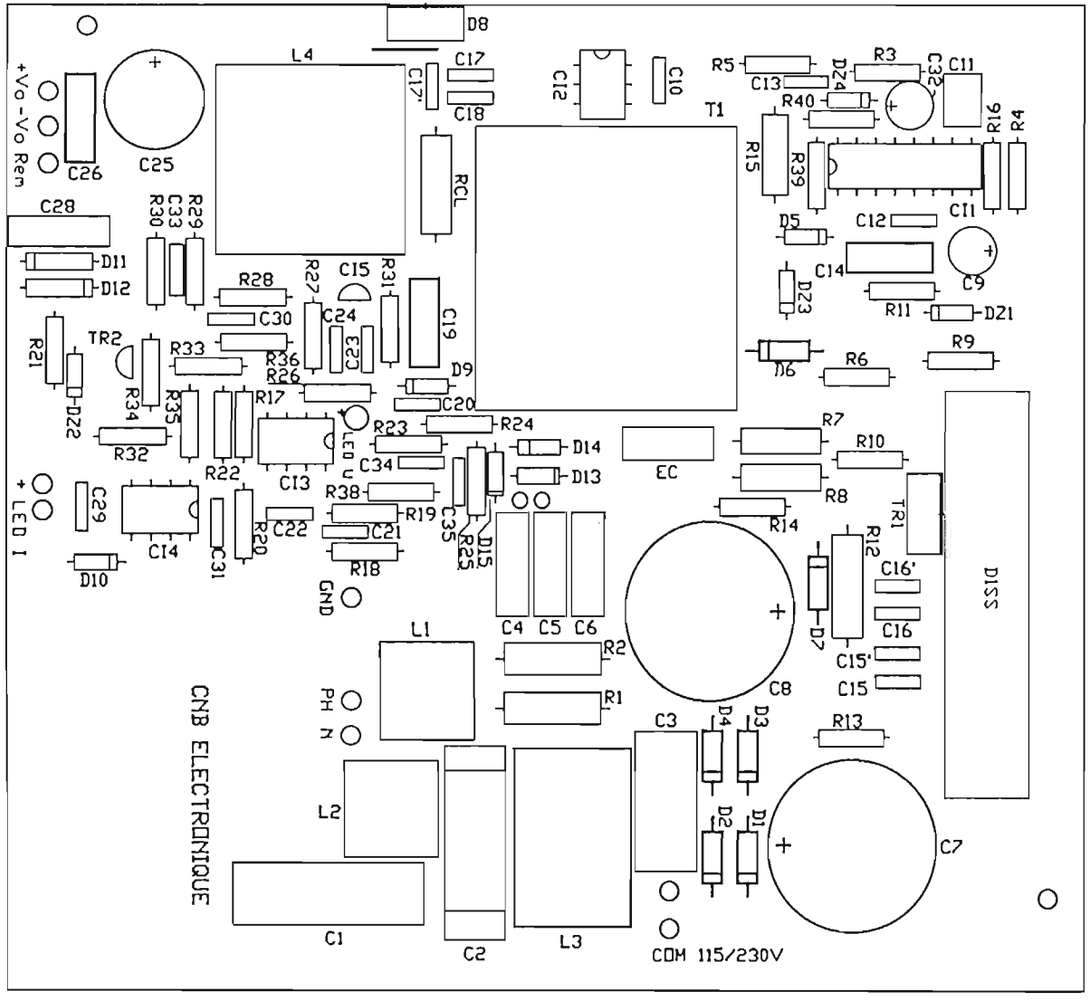

REPRODUCTION INTERDITE SANS NOTRE AUTORISATION

CNB ELECTRONIQUE

CHARGEUR NAGRA AC/DC
SERIGRAPHIE COMPOSANTS

REF: CN88 1B NA	ECH : 1
	DATE : 14-02-96

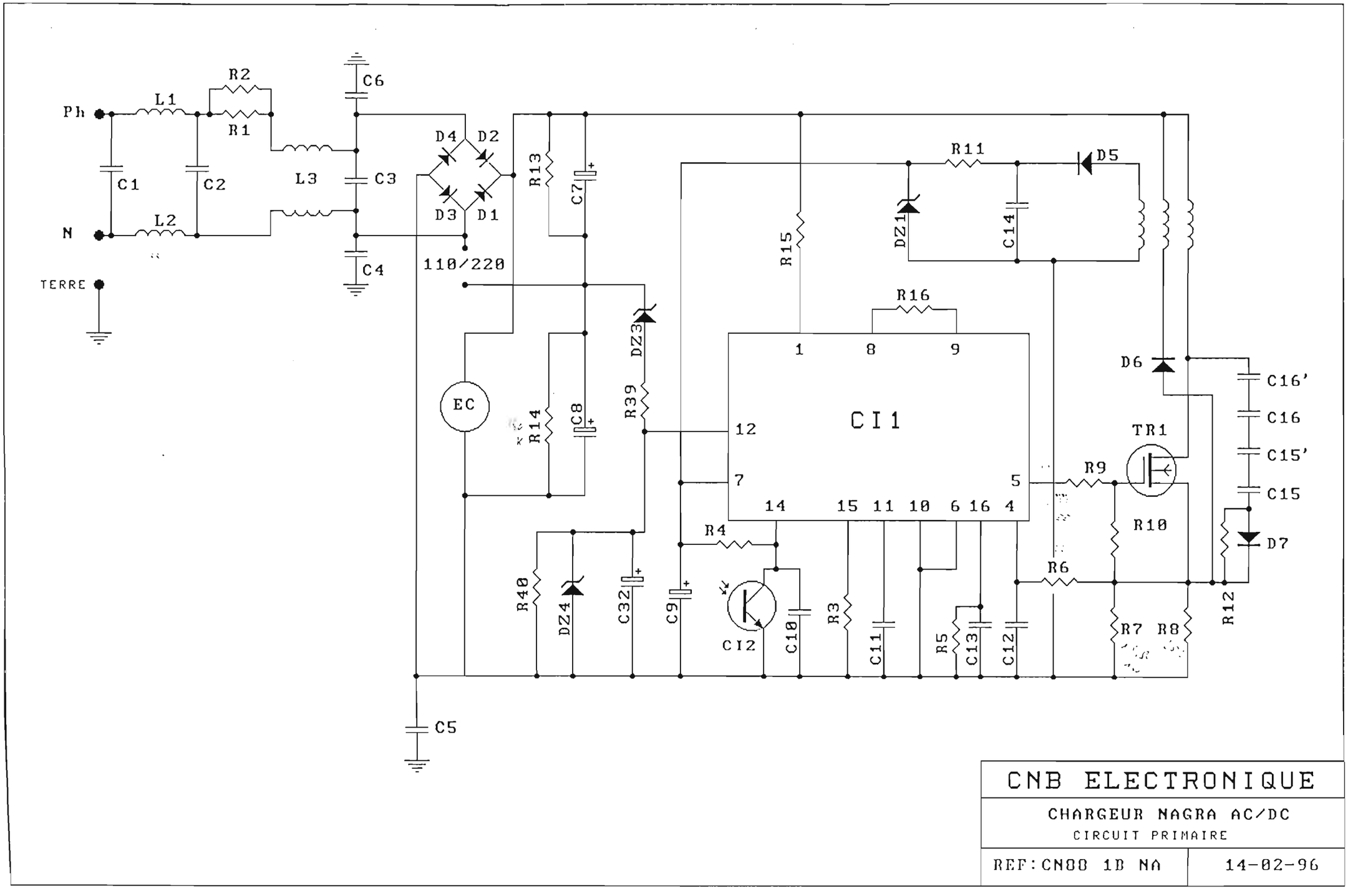

CNB ELECTRONIQUE	
CHARGEUR NAGRA AC/DC CIRCUIT PRIMAIRE	
REF:CN08 1B NA	14-02-96

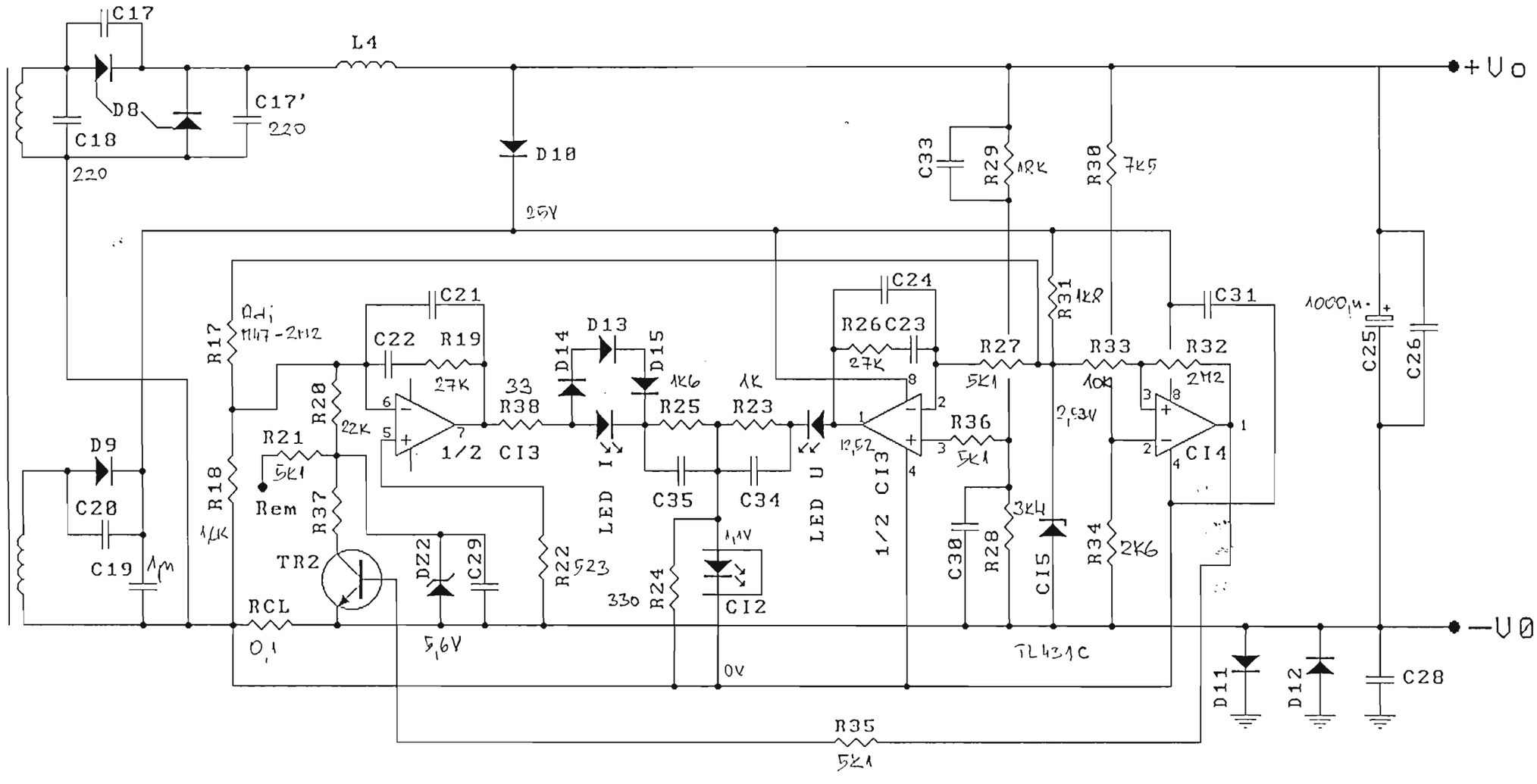

CNB ELECTRONIQUE	
CHARGEUR NAGRA AC/DC CIRCUIT SECONDAIRE	
REF: CN88 1B NA	14-02-96

ALIMENTATION : NAGRA CN88 1A NA

SEMI-CONDUCTEURS

IND	TYPE	FABRICANT
CI1	SI 9120 DJ	SILICONIX
CI2	CQY80N	TFK
CI3	LM 358 N	S/T
CI4	LM 358 N	S/T
CI5	TL 431 C	MOTO - TEXAS
TR1	BUZ 80 FI	S/T
TR2	2N2222A	ITT - PH
EC	VE240251K	THOMSON

DIVERS

TR1	TR1-NAG-DEC1A	CNB ELECTRONIQUE
L1	L1-NAG-DEC1A	CNB ELECTRONIQUE
L2	L2-NAG-DEC1A	CNB ELECTRONIQUE
L3	3732221340	SEEM
L4	L4-NAG-DEC1A	CNB ELECTRONIQUE
DISS	WA 420 L=42mm	SCHAFFNER

2 RUE DE LA SOURCE - 25620 MAMIROLLE - TEL 81 55 04 04 - TELEX 361 806 - FAX 81 55 83 03

ALIMENTATION : NAGRA CN88 1A NA

CONDENSATEURS

IND	VALEUR	TENS SERV	TYPE	FABRICANT
C26	1uF	63V		
C27	NI			
C28	NI			
C29	47nF	63V		
C30	47nF	63V		
C31	47nF	63V		

DIODES

D1			1N4007	ITT
D2			1N4007	ITT
D3			1N4007	ITT
D4			1N4007	ITT
D5			BAV21	ITT
D6			BYT11-1000	S/T
D7			BYT11-1000	S/T
D8			BYW51-200	S/T
D9			BAV21	ITT
D10			BAV21	ITT
D11			1N4007	ITT
D12			1N4007	ITT
DZ1			BZX55C13	PH
DZ2			BZX55C5.6	PH

2 RUE DE LA SOURCE - 25620 MAMIROLLE - TEL. 81 55 84 84 - TELEX 361 806 - FAX. 81 55 83 03

ALIMENTATION :NAGRA CN88 1A NA

CONDENSATEURS

IND	VALEUR	TENS SERV	TYPE	FABRICANT
C1	.22uF	250V AC	X2	
C2	.22uF	250V AC	X2	
C3	.1uF	250V AC	X2	
C4	2.2nF	250V AC	Y	
C5	2.2nF	250V AC	Y	
C6	2.2nF	250V AC	Y	
C7	220uF	200V		
C8	220uF	200V		
C9	47uF	25V		
C10	220nF	50V		
C11	.47uF-1uF	63V		
C12	470pF	100V		
C13	10nF	100V		
C14	1uF	63V		
C15	1nF	500V		
C15'	1nF	500V		
C16	1nF	500V		
C16'	1nF	500V		
C17	220pF	100V		
C17'	NI			
C18	220pF	100V		
C19	1uF	63V		
C20	NI			
C21	NI			
C22	10nF	100V		
C23	10nF	100V		
C24	NI			
C25	1000uF	25V		

ALIMENTATION : NAGRA CN88 1A NA

RESISTANCES

IND	VALEUR	TOL	PUISSANCE	TYPE	FABRICANT
R29	18 K	2	.25 W	MR25	
R30	7.5 K	1	.25 W	MR25	
R31	1.8 K	5	.25 W	SFR25	
R32	2.2 M	5	.25 W	SFR25	
R33	10 K	5	.25 W	SFR25	
R34	2.61 K	1	.25 W	MR25	
R35	5.1 K	5	.25 W	SFR25	
R36	5.1 K	5	.25 W	SFR25	
R37	NI				
R38	33 R	5	.25 W	SFR25	
RCL	.1 R	1	3W	LVR3-15	

2 RUE DE LA SOURCE - 25620 MAMIROLLE - TEL. 81 55 84 84 - TELEX 361 806 - FAX. 81 55 83 03

ALIMENTATION : NAGRA CN88 1A NA

RESISTANCES

IND	VALEUR	TOL	PUISSANCE	TYPE	FABRICANT
R1	.47 R	5	3 W	RB59	
R2	.47 R	5	3 W	RB59	
R3	27.4 K	1	25 W	MR25	
R4	7.5 K	1	25W	MR25	
R5	390 K	5	.25 W	SFR25	
R6	523 R	1	.25 W	MR25	
R7	1.5 R	5	1 W	PR01	
R8	AJH 2.2R 7.5R	5			
R9	120 R	5	.25 W	SFR25	
R10	27.4 K	1	.25 W	MR25	
R11	220 R	5	.25 W	SFR25	
R12	680 R	5	2 W	PR02	
R13	150 K	5	.25 W	SFR25	
R14	150 K	5	.25 W	SFR25	
R15	15 K	5	2 W	PR02	
R16	154 K	1	.25 W	MR25	
R17	AJH 470K-2.2M	5	.25 W	SFR25	
R18	1.6 K	5	.25 W	SFR25	
R19	27.4 K	1	.25 W	MR25	
R20	22 K	5	.25 W	SFR25	
R21	5.1 K	5	.25 W	SFR25	
R22	523 R	1	.25 W	MR25	
R23	1 K	5	.25 W	SFR25	
R24	330 R	5	.25 W	SFR25	
R25	750 R	5	.25 W	SFR25	
R26	27.4 K	1	.25 W	MR25	
R27	5.1 K	5	.25 W	SFR25	
R28	3.4 K	1	.25 W	SFR25	

2 RUE DE LA SOURCE - 25820 MAMIROLLE - TEL : 81 55 84 84 - TELEX 361 806 - FAX : 81 55 83 03

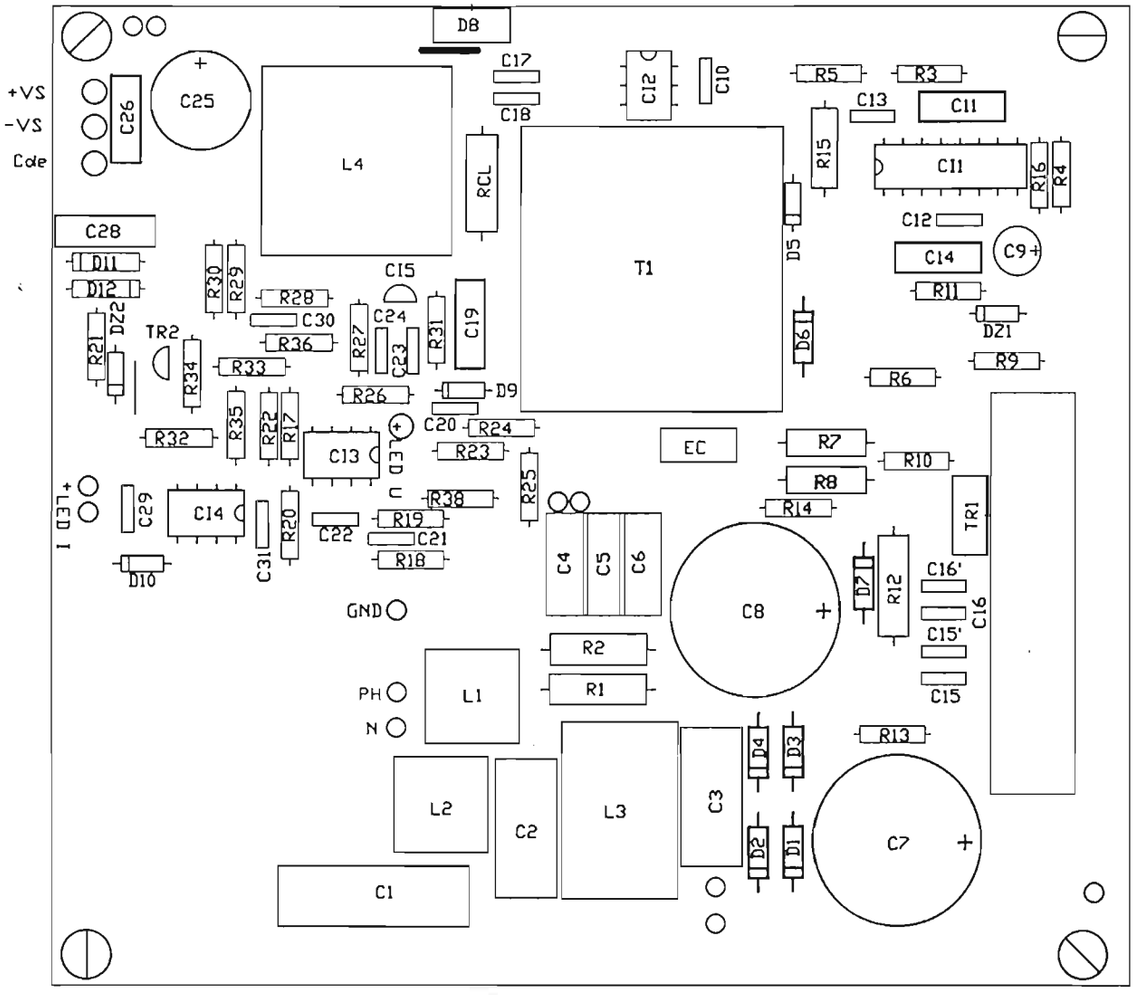

REPRODUCTION INTERDITE SANS NOTRE AUTORISATION

CNB ELECTRONIQUE

CHARGEUR NAGRA AC/DC
SERIGRAPHIE COMPOSANTS

REF: CN88 1A NA	ECH : 1
	DATE : 14-02-96

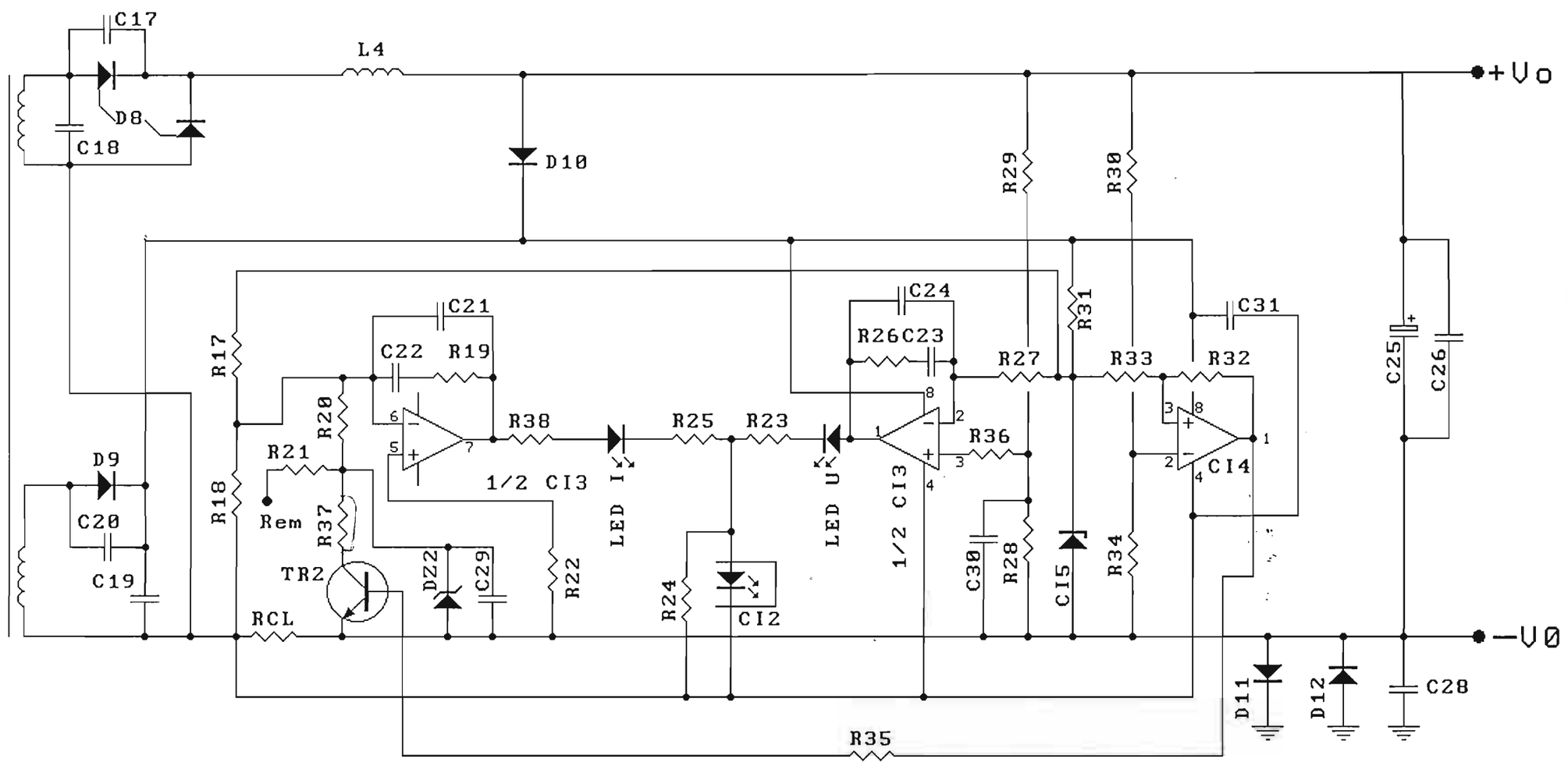

CNB ELECTRONIQUE	
CHARGEUR NAGRA AC/DC CIRCUIT SECONDAIRE	
REF:CN88 1A NA	14-02-96

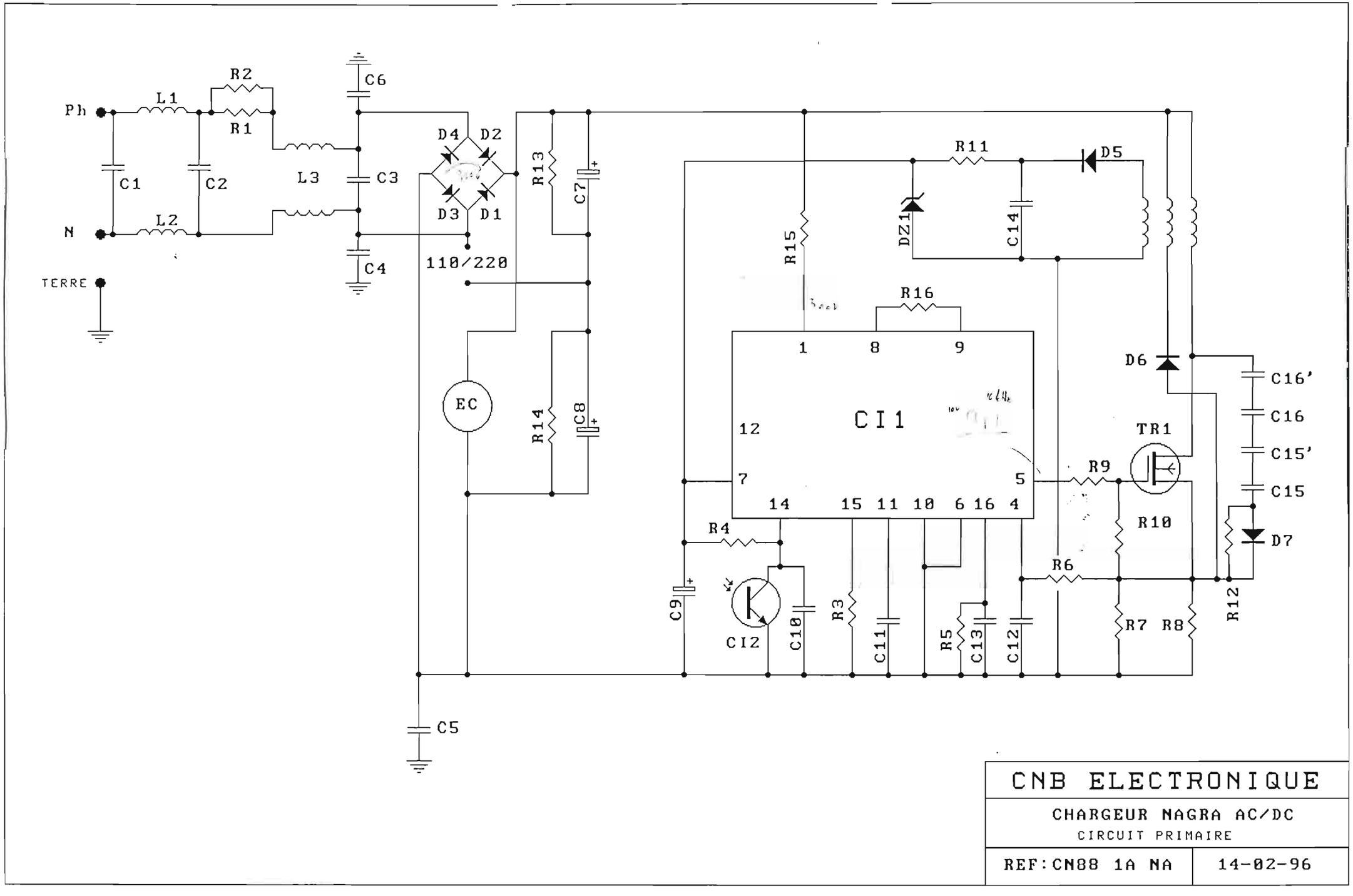
Ph
N
TERRE
L1
L2
L3
R1
R2
C1
C2
C3
C4
C5
C6
C7
C8
C9
C10
C11
C12
C13
C14
C15
C15'
C16
C16'
D1
D2
D3
D4
D5
D6
D7
DZ1
R3
R4
R5
R6
R7
R8
R9
R10
R11
R12
R13
R14
R15
R16
110/220
EC
CI1
CI2
TR1
1
8
9
12
7
5
14
15
11
10
6
16
4
CNB ELECTRONIQUE
CHARGEUR NAGRA AC/DC
CIRCUIT PRIMAIRE
REF:CN88 1A NA
14-02-96

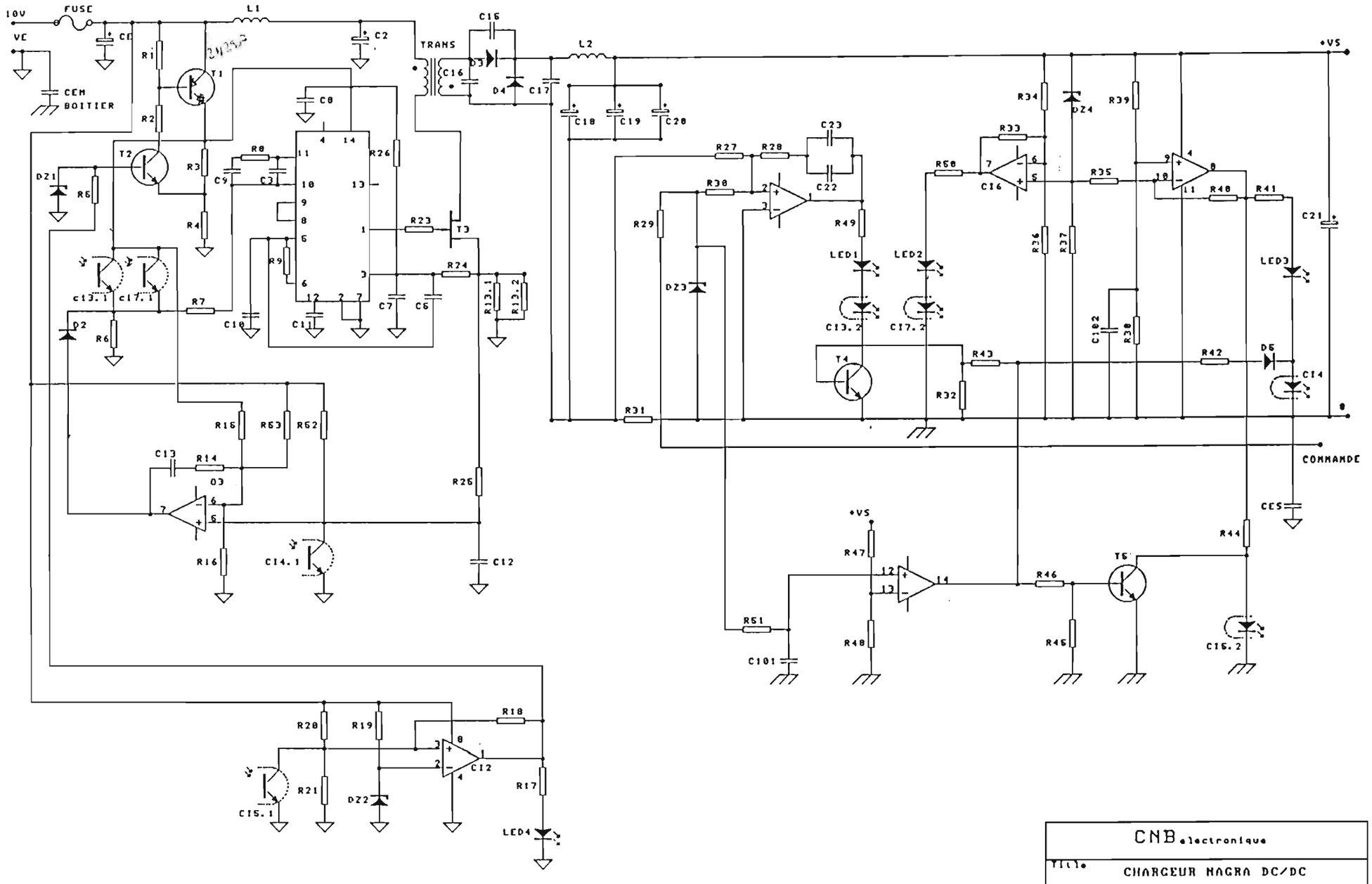

CNB electronique		
Title	CHARGEUR NAGRA DC/DC	
Size A3	Number CN88-DC/DC	Revision
Date: 26-JUL 1993		Sheet of
File: CN88SCH/1		Drawn By:

ELECTRONIQUE

NOMENCLATURE DES COMPOSANTS DU CHARGEUR DC/DC NAGRA D CN88B(suite)

- SEMI-CONDUCTEURS :

IND.	REFERENCE	FABRICANT	OBSERVATIONS
DZ1	BZX 55C 5.6V	ITT	
DZ2	BZX 55C 5.6V	ITT	
DZ3	BZX 55C 5.6V	ITT	
DZ4	BZX 55C 5.6V	ITT	
D1	N C		
D2	1N 4148/BAV21	ITT	
D3	MUR 860	MOTOROLA	
D4	MUR 860	MOTOROLA	
D5	1N 4148	ITT	
LED4	DIAM 3MM	TFK	EN FACE AVANT:Ve SUP à10%
LED1	DIAM 3MM	TFK	EN FACE AVANT: REGUL I
LED2	DIAM 3MM	TFK	SUR CIRCUIT
LED3	DIAM 3MM	TFK	SUR CIRCUIT
T1	2N 2907 A	MOTOROLA	
T2	2N 2222 A	MOTOROLA	
T3	IRF 44	IR	
T4	2N 2222 A	MOTOROLA	
T5	2N 2222 A	MOTOROLA	
CI1	MC 34129 D	MOTOROLA	
CI2	LM 358	MOTOROLA	
CI3	SL 5500	PHILIPS	
CI4	SL 5500	PHILIPS	
CI5	SL 5500	PHILIPS	
CI6	LP 324 N	N S	
CI7	SL 5500	PHILIPS	

DIVERS :

L1	CN88L1DC	CNB EL.	SELF D'ENTREE
L2	CN88L2DC	CNB EL.	SELF DE SORTIE
TR	CN88TRDC	CNB EL.	TRANSFO.
FUS 1	FAU00313577	SCHURTER	SUPPORT FUSIBLE
	FEK00311663	SCHURTER	ADAPT. 5 x 20
	FED00311661	SCHURTER	ADAPT. 6.3 x 32

2, RUE DE LA SOURCE - 25620 MAMIROLLE - TÉL. 81 55 84 84 - TÉLEX 361 006 - FAX. 81 55 83 03

ELECTRONIQUE

NOMENCLATURE DES COMPOSANTS CHARGEUR DC/DC NAGRA CN88B(SUITE)

- CONDENSATEURS

IND	VALEUR	TENSION SERVICE	TYPE	FABRICANT
C1	100 µF	35 VDC	C135	PHILIPS
C2	2200 µF	35 VDC	C135	PHILIPS
C3	1 nF	63 VDC	CERAM	
C4	N I			
C5	N I			
C6	N I			
C7	1 nF	63 VDC	CERAM	
C8	1 µF	63 VDC	PM	PHILIPS
C9	4700 pF	63 VDC	CERAM	PHILIPS
C10	470 pF	63 VDC	CERAM	PHILIPS
C11	0.68 µF	63 VDC	PM	THOMSON
C12	4700 pF	63 VDC	CERAM	THOMSON
C13	47 nF	63 VDC	CERAM	THOMSON
C14	NI			
C15	N I			
C16	N I			
C17	470 pF	63 VDC	CERAM	
C18	220 µF	35 VDC	C135	PHILIPS
C19	220 µF	35 VDC	C135	PHILIPS
C20	220 µF	35 VDC	C135	PHILIPS
C21	1 µF	35 VDC	TANTAL	AVX
C22	NI			
C23	220nF	63 VDC		
C24	220 µF	35 VDC	C135	PHILIPS
CEB	10 nF	63 VDC	CERAM	AVX
CES	N I			
CSB	STRAP			
C101	1 µF	63 VDC	PM	
C102	10 nF	63 VDC	CERAM	AVX
C103	10 nF	63 VDC	CERAM	AVX

2, RUE DE LA SOURCE - 25620 MAMIROLLE - TÉL. 81 55 84 84 - TÉLEX 361 806 - FAX. 81 55 83 03

- RESISTANCES :

IND.	VALEUR	TOLERANCE	PUISSANCE
R1	30 K	1 %	
R2	30 K	1 %	
R3	4.7 K	5 %	
R4	4.7 K	5 %	
R5	33 K	5%	
R6	3.9 K	5 %	
R7	240 K	1 %	
R8	3 K	1 %	
R9	46.4 K	1 %	
R10	N I		
R11	N I		
R12	N I		
R13	0.1E	5 %	3 W
R13'	0.1E	5 %	3 W
R13"	0.1E	5 %	3 W
R14	56 K	5 %	
R15	100 K	5 %	
R16	220E	5 %	
R17	1.8 K	5 %	
R18	430 K	1 %	
R19	33 K	1 %	
R20	46.4 K	1 %	
R21	46,4 K	5 %	
R22	N I		
R23	10 E	5 %	
R24	1.8 K	5 %	
R25	8.2 K	1 %	
R26	15 K	5 %	
R27	3.24 K	1 %	
R28	49,9 K	1 %	
R29	4.7 K	5 %	
R30	46.4 K	5 %	
R31	0.1E	5 %	
R32	56 K	1 %	
R33	46,4 K	1 %	
R34	12 K	5 %	
R35	33 K	5 %	
R36	27 K	5 %	
R37	22 K	5 %	
R38	46.4 K	1 %	
R39	38.3/40.2 K	A AJUSTER	
R40	560 K	5 %	
R41	10 K	5 %	
R42	3.3 K	5 %	
R43	10 K	1 %	
R44	10 K	1 %	
R45	56 K	1 %	
R46	4 3 K	1 %	
R47	100 K	5 %	
R48	4.7 K	5 %	
R49	620E	5 %	
R50	3.9 K	5 %	
R51	110 K	5 %	
R52	10 M	5 %	
R53	560 K	5 %	

2 RUE DE LA SOURCE - 25620 MAMIROLLE - TEL. 81 55 84 84 - TELEX 361 806 - FAX. 81 55 83 03

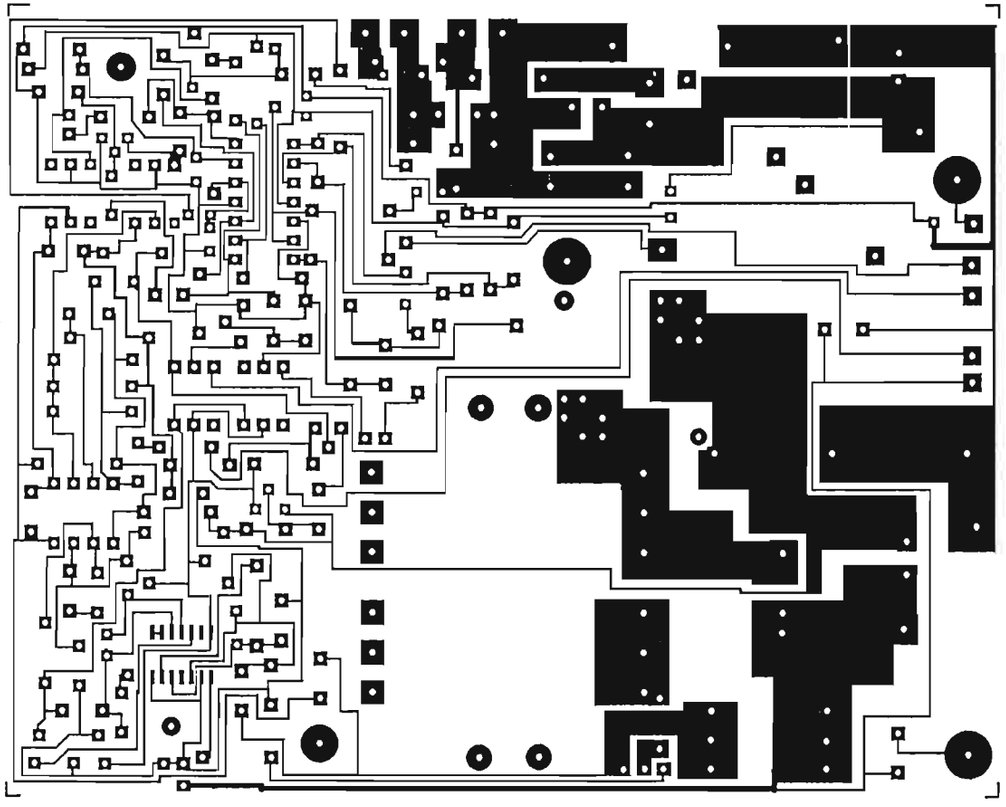

REPRODUCTION INTERDITE SANS NOTRE AUTORISATION

CNB ELECTRONIQUE

NAGRA ND - EPC B
CI COUCHE INFERIEURE

N PLAN :	ECH : 1
N DOSSIER :	DATE :

ELECTRONIQUE

DOSSIER TECHNIQUE DU CHARGEUR CN888 DC/DC COMPRENANT :

. SCHEMA DE PRINCIPE .....

. IMPLANTATION DES COMPOSANTS .....

. TRACE DU CIRCUIT IMPRIME.....

. LISTE DES COMPOSANTS . RESISTANCES .....

. "" "" CONDENSATEURS.....

. "" "" SEMI CONDUCTEUR + DIVERS.....

2, RUE DE LA SOURCE - 25620 MAMIROLLE - TÉL. 81 55 84 84 - TÉLEX 361 806 - FAX. 81 55 83 03

ELECTRONIQUE

ND-EPC B

CHARGEUR NAGRA DC/DC CN88

2, RUE DE LA SOURCE - 25620 MAMIROLLE - TÉL. 81 55 84 84 - TÉLEX 361 806 - FAX. 81 55 83 03

ELECTRONIQUE

NOMENCLATURE DES COMPOSANTS DU CHARGEUR DC/DC NAGRA D CN88 (suite)

- SEMI-CONDUCTEURS :

IND.	REFERENCE	FABRICANT	OBSERVATIONS
DZ1	BZX 55C 5.6V	ITT	
DZ2	BZX 55C 5.6V	ITT	
DZ3	BZX 55C 5.6V	ITT	
DZ4	BZX 55C 5.6V	ITT	
D1	N C		
D2	1N 4148/BAV21	ITT	
D3	MUR 860	MOTOROLA	
D4	MUR 860	MOTOROLA	
D5	1N 4148	ITT	
LED4	DIAM 3MM	TFK	EN FACE AVANT:Ve SUP à10%
LED1	DIAM 3MM	TFK	EN FACE AVANT: REGUL I
LED2	DIAM 3MM	TFK	SUR CIRCUIT
LED3	DIAM 3MM	TFK	SUR CIRCUIT
T1	2N 2907 A	MOTOROLA	
T2	2N 2222 A	MOTOROLA	
T3	IRFZ 44	IR	
T4	2N 2222 A	MOTOROLA	
T5	2N 2222 A	MOTOROLA	
CI1	MC 34129 D	MOTOROLA	
CI2	LM 358	MOTOROLA	
CI3	SL 5500	PHILIPS	
CI4	SL 5500	PHILIPS	
CI5	SL 5500	PHILIPS	
CI6	LP 324 N	N S	
CI7	SL 5500	PHILIPS	

DIVERS :

L1	CN88L1DC	CNB EL.	SELF D'ENTREE
L2	CN88L2DC	CNB EL.	SELF DE SORTIE
TR	CN88TRDC	CNB EL.	TRANSFO.
FUS 1	FAU00313577	SCHURTER	SUPPORT FUSIBLE
	FEK00311663	SCHURTER	ADAPT. 5 x 20
	FED00311661	SCHURTER	ADAPT. 6.3 x 32

NOMENCLATURE DES COMPOSANTS CHARGEUR DC/DC NAGRA CN88 (SUITE)

- CONDENSATEURS

IND	VALEUR	TENSION SERVICE	TYPE	FABRICANT
C1	100 µF	35 VDC	C135	PHILIPS
C2	2200 µF	35 VDC	C135	PHILIPS
C3	1 nF	63 VDC	CERAM	
C4	N I			
C5	N I			
C6	N I			
C7	1 nF	63 VDC	CERAM	
C8	1 µF	63 VDC	PM	PHILIPS
C9	4700 pF	63 VDC	CERAM	PHILIPS
C10	470 pF	63 VDC	CERAM	PHILIPS
C11	0.68 µF	63 VDC	PM	THOMSON
C12	4700 pF	63 VDC	CERAM	THOMSON
C13	47 nF	63 VDC	CERAM	THOMSON
C14				
C15	N I			
C16	N I			
C17	470 pF	63 VDC	CERAM	
C18	220 µF	35 VDC	C135	PHILIPS
C19	220 µF	35 VDC	C135	PHILIPS
C20	220 µF	35 VDC	C135	PHILIPS
C21	1 µF	35 VDC	TANTAL	AVX
C22	0.22µF	63 VDC	PM	
C23	N I			
C24	220 µF	35 VDC	C135	PHILIPS
CEB	2,2 nF	63 VDC	CERAM	AVX
CES	N I			
CSB	2,2 nF	63 VDC	CERAM	AVX
C101	1 µF	63 VDC	PM	
C102	22 nF	63 VDC	CERAM	AVX
C103	22 nF	63 VDC	CERAM	AVX

2, RUE DE LA SOURCE - 25620 MAMIROLLE - TEL. 81 55 84 84 - TELEX 361 806 - FAX. 81 55 83 03

NOMENCLATURE COMPOSANT CHARGEUR DC/DC - NAGRA - CN88

RESISTANCES :

IND.	VALEUR	TOLERANCE	PUISSANCE
R1	30 K	1 %	
R2	30 K	1 %	
R3	4.7 K	5 %	
R4	4.7 K	5 %	
R5	33 K	5%	
R6	3.9 K	5 %	
R7	240 K	1 %	
R8	80,2 K	1 %	
R9	46.4 K	1 %	
R10	N I		
R11	N I		
R12	N I		
R13	0.1E	5 %	3 W
R13'	0.1E	5 %	3 W
R13"	0.1E	5 %	3 W
R14	56 K	5 %	
R15	100 K	5 %	
R16	2 0	5 %	
R17	1.8 K	5 %	
R18	430 K	1 %	
R19	33 K	1 %	
R20	46.4 K	1 %	
R21	15 K	5 %	
R22	N I		
R23	10 E	5 %	
R24	1.8 K	5 %	
R25	8.2 K	1 %	
R26	15 K	5 %	
R27	3.24 K	1 %	
R28	62 K	1 %	
R29	4.7 K	5 %	
R30	46.4 K	5 %	
R31	0.1E	5 %	
R32	56 K	1 %	
R33	4 K	1 %	
R34	12 K	5 %	
R35	33 K	5 %	
R36	27 K	5 %	
R37	22 K	5 %	
R38	46.4 K	1 %	
R39	38.3/40.2 K	A AJUSTER	
R40	560 K	5 %	
R41	10 K	5 %	
R42	3.3 K	5 %	
R43	10 K	1 %	
R44	10 K	1 %	
R45	56 K	1 %	
R46	4 3 K	1 %	
R47	100 K	5 %	
R48	4.7 K	5 %	
R49	1,69K	5 %	
R50	3.9 K	5 %	
R51	110 K	5 %	
R52		5 %	
R53	560 K	5 %	

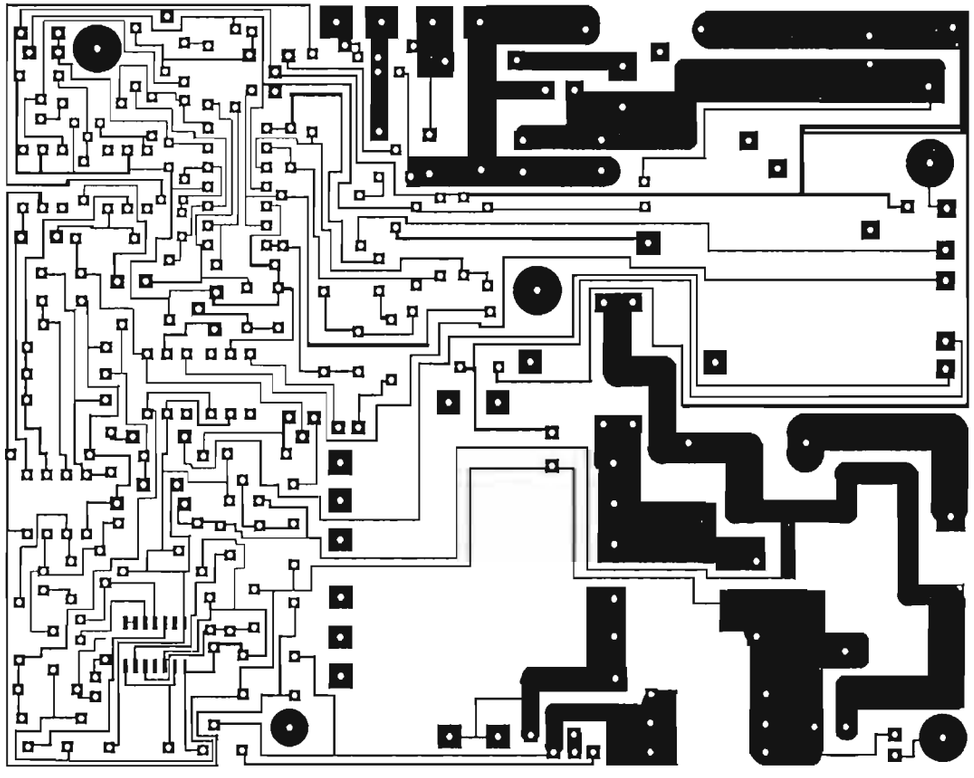

REPRODUCTION INTERDITE SANS NOTRE AUTORISATION

CNB ELECTRONIQUE

NAGRA ND - EPC
CI COUCHE INFERIEURE

N PLAN :	ECH : 1
N DOSSIER :	DATE :

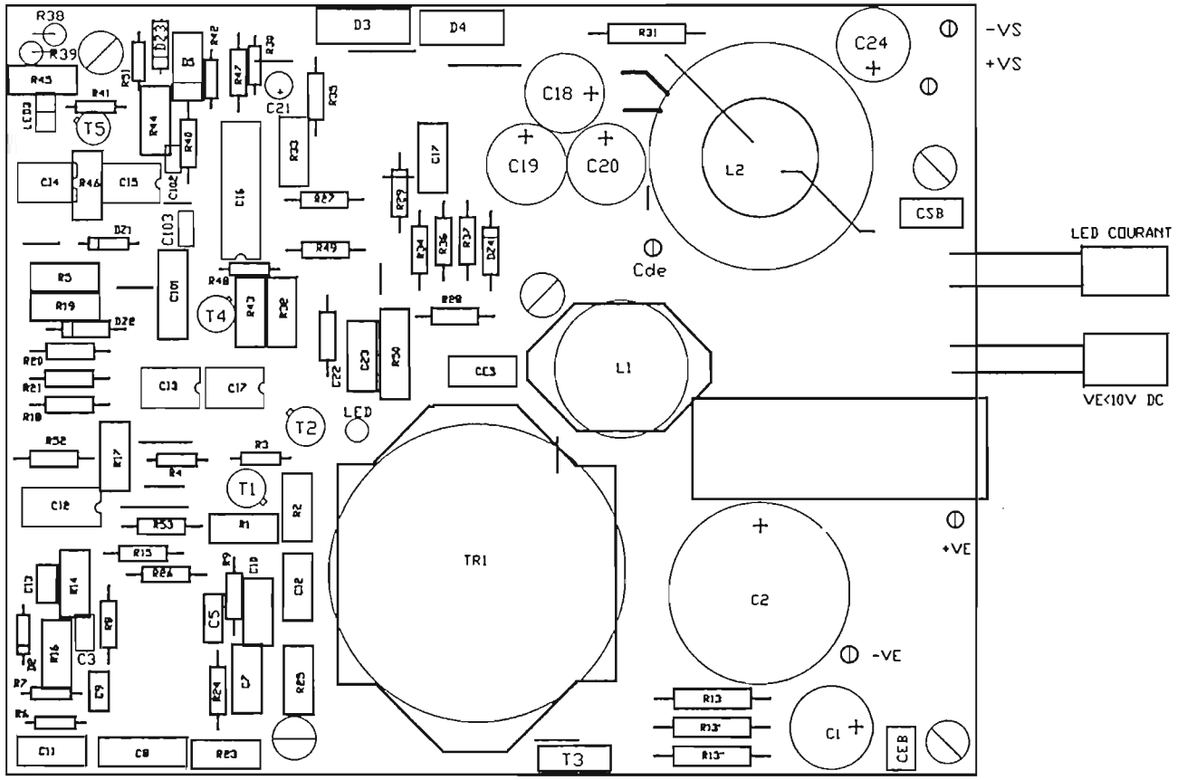

REPRODUCTION INTERDITE SANS NOTRE AUTORISATION

CNB ELECTRONIQUE

NAGRA ND - EPC
SERIGRAPHIE COMPOSANTS

N PLAN :	ECH : 1
N DOSSIER :	DATE :

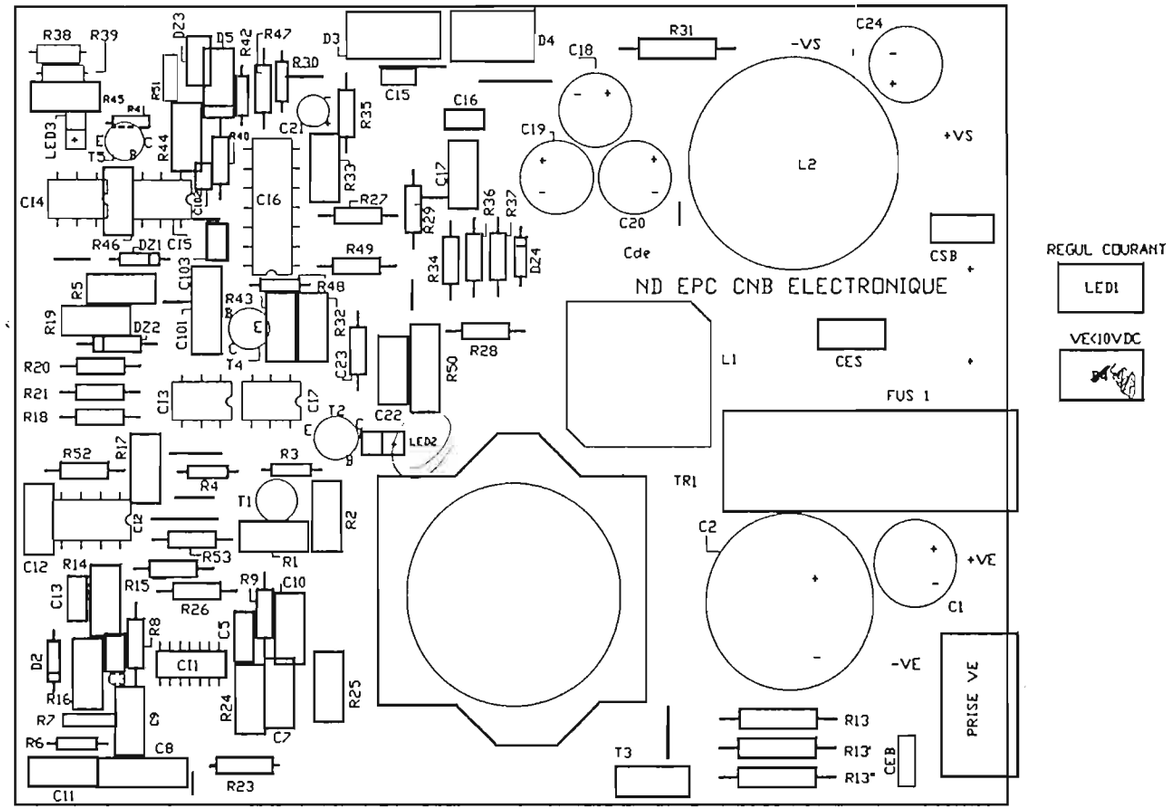

REPRODUCTION INTERDITE SANS NOTRE AUTORISATION

CNB ELECTRONIQUE

NAGRA ND - EPC B
SERIGRAPHIE COMPOSANTS

N PLAN :	ECH : 1
N DOSSIER :	DATE :

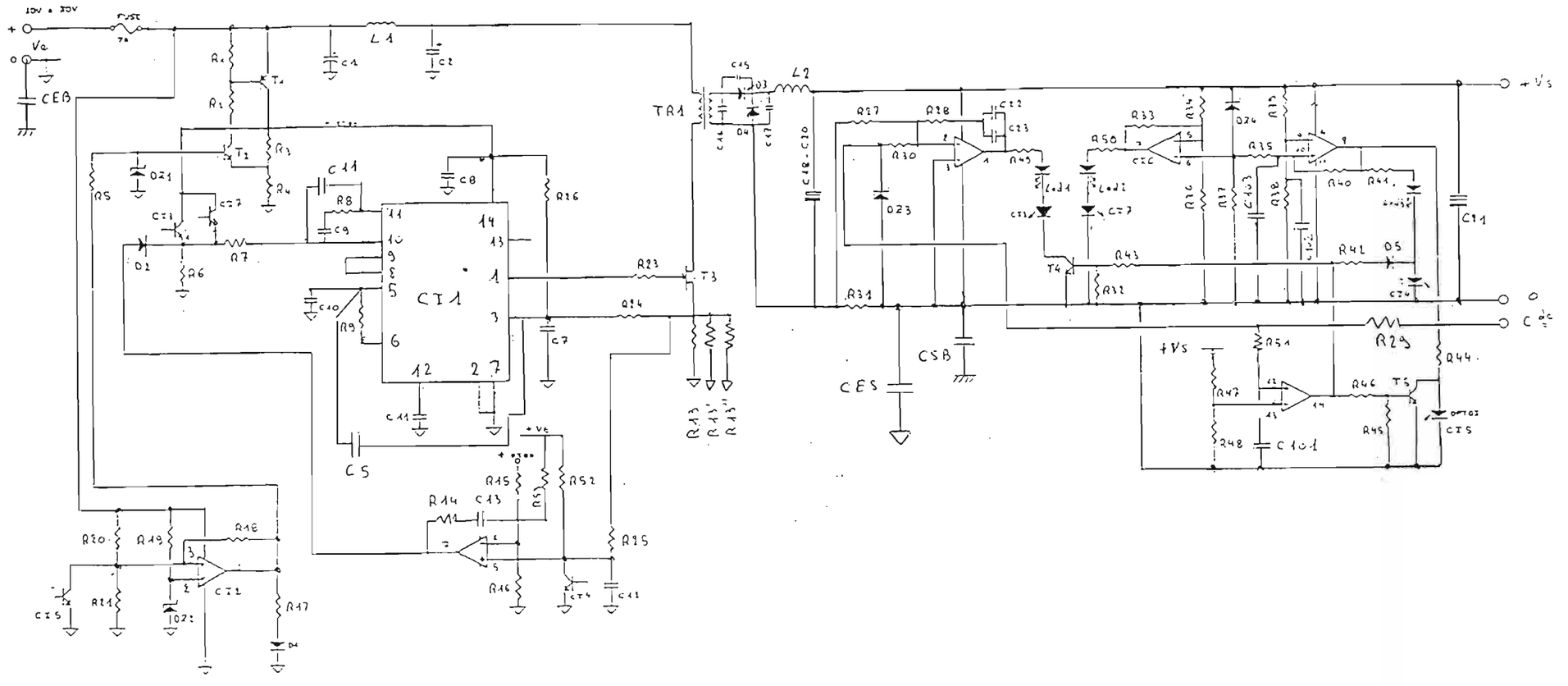
10V à 30V
FUSE
Ve
CEB
L1
L2
TR1
CI1
CS
CES
CSB
+Vs
0
C dc
R29
R44
R51
R47
R48
C101
R46
T5
R45
CI5
R14
C13
R15
R16
CI4
C11
R13
R13'
R13''
R23
R24
T3
R26
R27
R28
R30
R31
R32
R33
R34
R35
R36
R37
R38
R39
R40
R41
R42
R43
R50
D23
D24
D5
T4
CI2
CI3
R20
R19
R18
R21
R17
D4
D2
D3
D1
T1
T2
R1
R2
R3
R4
R5
R6
R7
R8
R9
C1
C2
C7
C8
C9
C10
C12
C14
C15
C16
C17
C18-C20
C21
C22
C23
C24
C25
C26
C27
C28
C29
C30
C31
C32
C33
C34
C35
C36
C37
C38
C39
C40
C41
C42
C43
C44
C45
C46
C47
C48
C49
C50
C51
C52
C53
C54
C55
C56
C57
C58
C59
C60

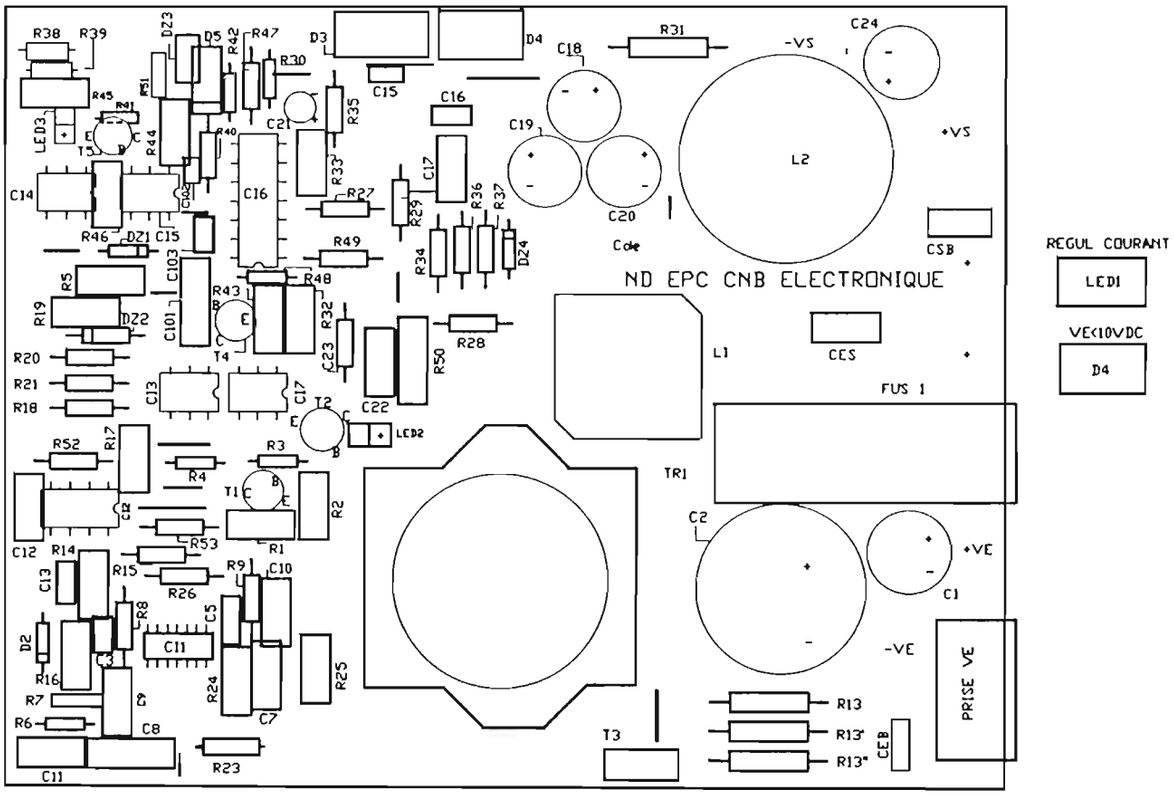
ND EPC CNB ELECTRONIQUE
REGUL COURANT
LED1
VE<10VDC
D4
FUS 1
PRISE VE
+VS
-VS
+VE
-VE
CSB
CES
CEB
TR1
L1
L2
C1
C2
C20
C24
T3
T4
T1
T2
LED2
LED3
R13
R13'
R13"
R23
R25
R26
R27
R28
R29
R30
R31
R32
R33
R34
R35
R36
R37
R38
R39
R40
R41
R42
R43
R44
R45
R46
R47
R48
R49
R50
R52
R53
R1
R2
R3
R4
R5
R6
R7
R8
R9
R10
R14
R15
R16
R17
R18
R19
R20
R21
R24
R25
R26
R27
R28
R29
R30
R31
R32
R33
R34
R35
R36
R37
R38
R39
R40
R41
R42
R43
R44
R45
R46
R47
R48
R49
R50
R52
R53
C1
C2
C3
C5
C7
C8
C9
C10
C11
C12
C13
C14
C15
C16
C17
C18
C19
C20
C21
C22
C23
C24
C101
C102
C103
D2
D3
D4
D5
D21
D22
D23
D24
DZ1
DZ2
DZ3
T5

CN88 DC/DC

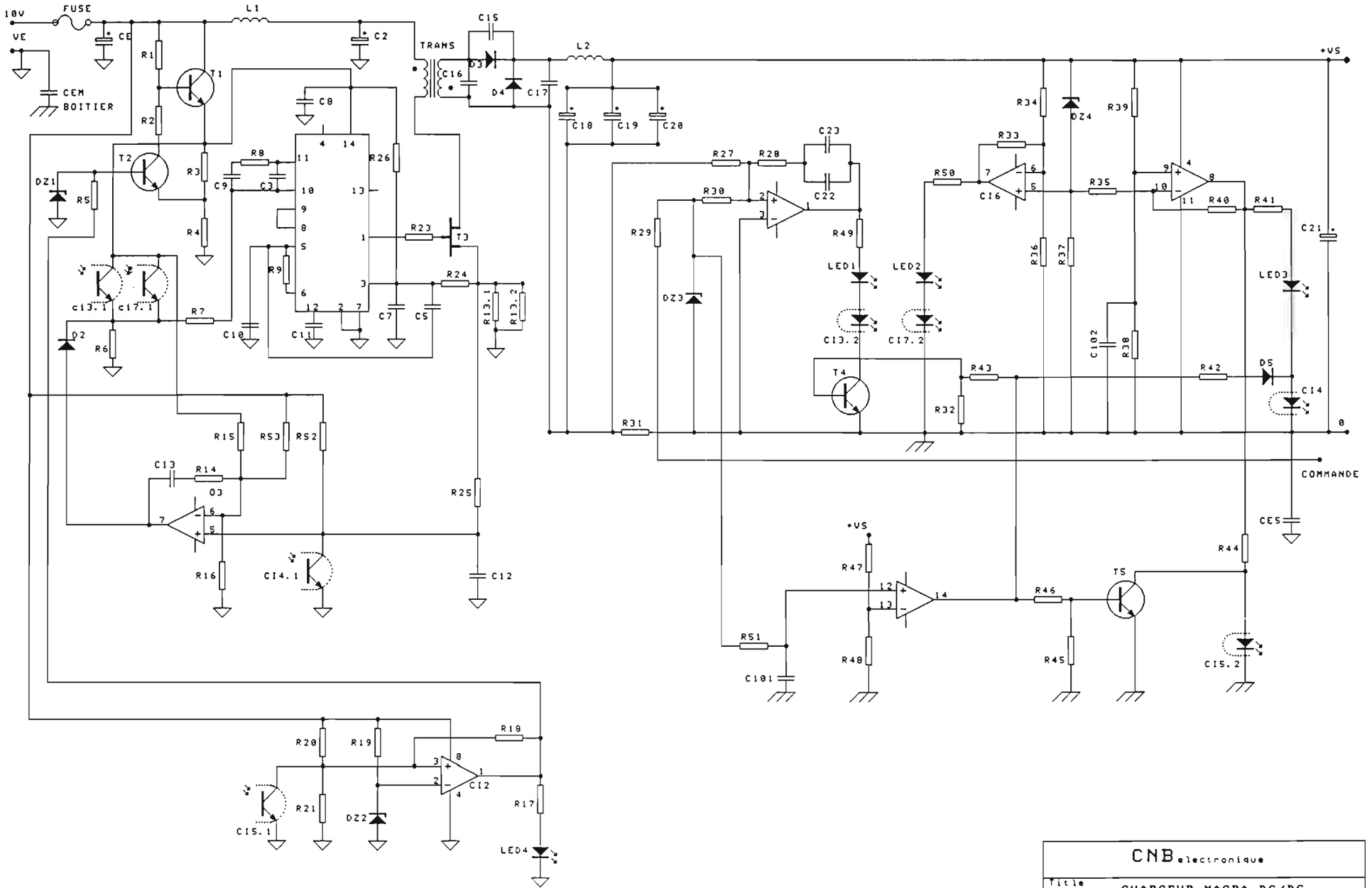

CNB electronique	
Title	CHARGEUR MAGRA DC/DC
Size A3	Number CN88-DC/DC — Revision
Date: 26-JUL-1993	Sheet of
File: CN88SCH/	Drawn By:

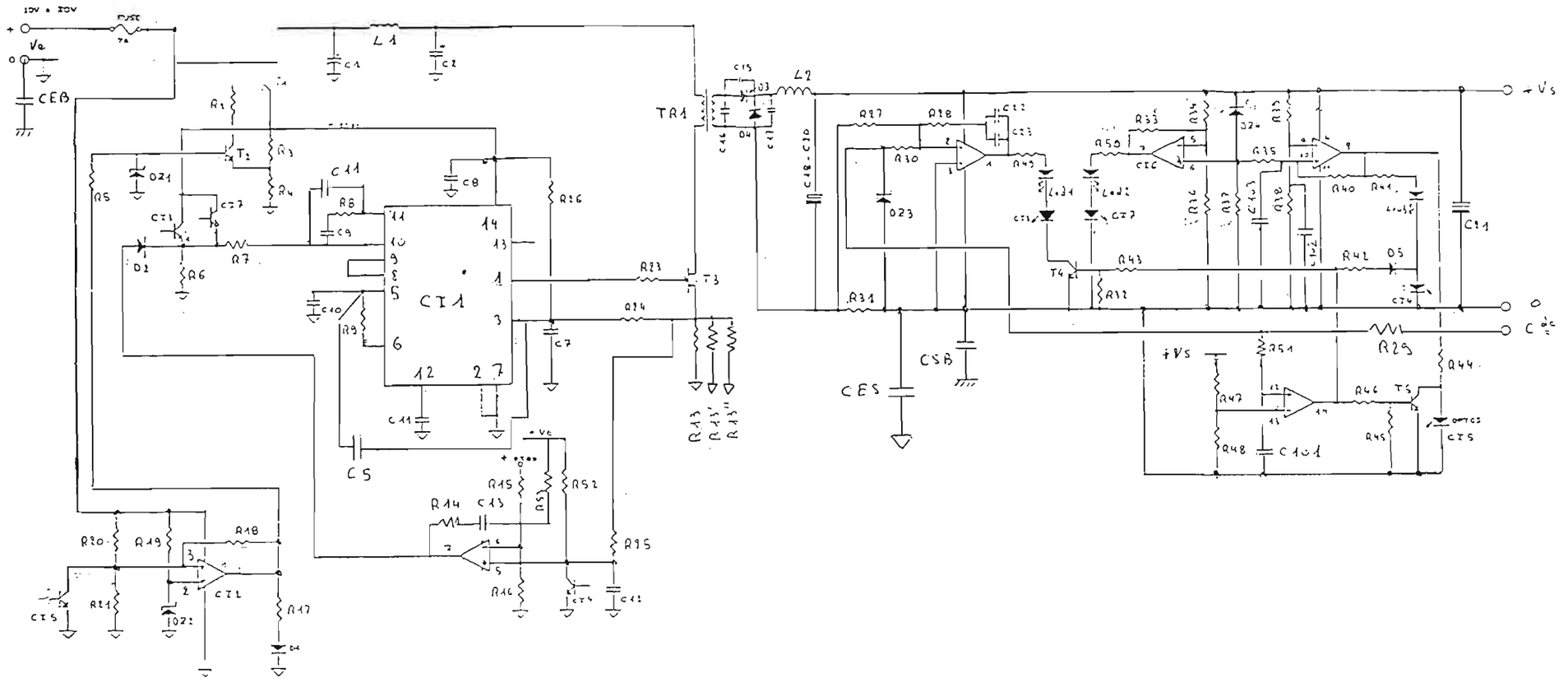

CNB ELECTRONIQUE	
CHARGEUR NAGRA DC/DC	
REF: ND — EPC	05-07-93

ELECTRONIQUE

DOSSIER TECHNIQUE DU CHARGEUR CN888 DC/DC COMPRENANT :

SCHEMA DE PRINCIPE .....

. IMPLANTATION DES COMPOSANTS .....

. TRACE DU CIRCUIT IMPRIME.....

. LISTE DES COMPOSANTS . RESISTANCES .....

. "" "" CONDENSATEURS.....

. "" "" SEMI CONDUCTEUR + DIVERS.....

2, RUE DE LA SOURCE - 25620 MAMIROLLE - TÉL. 81 55 84 84 - TÉLEX 361 806 - FAX. 81 55 83 03

ND ELECTRONIQUE

ND-EPC

CHARGEUR NAGRA DC/DC CN88

2, RUE DE LA SOURCE - 25620 MAMIROLLE - TEL. 81 55 84 84 - TELEX 361 806 - FAX. 81 55 83 03

NOMENCLATURE DES COMPOSANTS DU CHARGEUR DC/DC NAGRA D CN88 (suite)

- SEMI-CONDUCTEURS :

IND.	REFERENCE	FABRICANT	OBSERVATIONS
DZ1	BZX 55C 5.6V	ITT	
DZ2	BZX 55C 5.6V	ITT	
DZ3	BZX 55C 5.6V	ITT	
DZ4	BZX 55C 5.6V	ITT	
D1	N C		
D2	1N 4148/BAV21	ITT	
D3	MUR 860	MOTOROLA	
D4	MUR 860	MOTOROLA	
D5	1N 4148	ITT	
LED4	DIAM 3MM	TFK	EN FACE AVANT:Ve SUP à10%
LED1	DIAM 3MM	TFK	EN FACE AVANT: REGUL I
LED2	DIAM 3MM	TFK	SUR CIRCUIT
LED3	DIAM 3MM	TFK	SUR CIRCUIT
T1	2N 2907 A	MOTOROLA	
T2	2N 2222 A	MOTOROLA	
T3	IRFZ 44	IR	
T4	2N 2222 A	MOTOROLA	
T5	2N 2222 A	MOTOROLA	
CI1	MC 34129 D	MOTOROLA	
CI2	LM 358	MOTOROLA	
CI3	SL 5500	PHILIPS	
CI4	SL 5500	PHILIPS	
CI5	SL 5500	PHILIPS	
CI6	LP 324 N	N S	
CI7	SL 5500	PHILIPS	
DIVERS :			
L1	CN88L1DC	CNB EL.	SELF D'ENTREE
L2	CN88L2DC	CNB EL.	SELF DE SORTIE
TR	CN88TRDC	CNB EL.	TRANSFO.
FUS 1	FAU00313577	SCHURTER	SUPPORT FUSIBLE
	FEK00311663	SCHURTER	ADAPT. 5 x 20
	FED00311661	SCHURTER	ADAPT. 6.3 x 32

NOMENCLATURE DES COMPOSANTS CHARGEUR DC/DC NAGRA CN88 (SUITE)

- CONDENSATEURS

IND	VALEUR	TENSION SERVICE	TYPE	FABRICANT
C1	100 µF	35 VDC	C135	PHILIPS
C2	2200 µF	35 VDC	C135	PHILIPS
C3	1 nF	63 VDC	CERAM	
C4	N I			
C5	N I			
C6	N I			
C7	1 nF	63 VDC	CERAM	
C8	1 µF	63 VDC	PM	PHILIPS
C9	4700 pF	63 VDC	CERAM	PHILIPS
C10	470 pF	63 VDC	CERAM	PHILIPS
C11	0.68 µF	63 VDC	PM	THOMSON
C12	4700 pF	63 VDC	CERAM	THOMSON
C13	47 nF	63 VDC	CERAM	THOMSON
C14	1 µF	35 VDC	TANTAL	AVX
C15	N I			
C16	N I			
C17	470 pF	63 VDC	CERAM	
C18	220 µF	35 VDC	C135	PHILIPS
C19	220 µF	35 VDC	C135	PHILIPS
C20	220 µF	35 VDC	C135	PHILIPS
C21	1 µF	35 VDC	TANTAL	AVX
C22	0.22µF	63 VDC	PM	
C23	N I			
C24	220 µF	35 VDC	C135	PHILIPS
CEB	10 nF	63 VDC	CERAM	AVX
CES	N I			
CSB	10 nF	63 VDC	CERAM	AVX
C101	1 µF	63 VDC	PM	
C102	10 nF	63 VDC	CERAM	AVX
C103	10 nF	63 VDC	CERAM	AVX

NOMENCLATURE COMPOSANT CHARGEUR DC/DC - NAGRA - CN88

- RESISTANCES :

IND.	VALEUR	TOLERANCE	PUISSANCE
R1	30.1 K	1 %	
R2	30.1 K	1 %	
R3	4.7 K	5 %	
R4	4.7 K	5 %	
R5	33 K	5%	
R6	3.9 K	5 %	
R7	240 K	1 %	
R8	34 K	1 %	
R9	46.4 K	1 %	
R10	N I		
R11	N I		
R12	N I		
R13	0.1E	5 %	3 W
R13'	0.1E	5 %	3 W
R13"	0.1E	5 %	3 W
R14	56 K	5 %	
R15	100 K	5 %	
R16	200	5 %	
R17	1.8 K	5 %	
R18	430 K	1 %	
R19	33 K	1 %	
R20	46.4 K	1 %	
R21	56 K	5 %	
R22	N I		
R23	10 E	5 %	
R24	1.8 K	5 %	
R25	8.2 K	1 %	
R26	15 K	5 %	
R27	3.24 K	1 %	
R28	49.9 K	1 %	
R29	4.7 K	5 %	
R30	46.4 K	5 %	
R31	0.1E	5 %	
R32	56 K	1 %	
R33	46.4 K	1 %	
R34	12 K	5 %	
R35	33 K	5 %	
R36	27 K	5 %	
R37	22 K	5 %	
R38	46.4 K	1 %	
R39	38.3/40.2 K	A AJUSTER	
R40	560 K	5 %	
R41	10 K	5 %	
R42	3.3 K	5 %	
R43	10 K	1 %	
R44	10 K	1 %	
R45	56 K	1 %	
R46	403 K	1 %	
R47	100 K	5 %	
R48	4.7 K	5 %	
R49	620	5 %	
R50	3.9 K	5 %	
R51	110 K	5 %	
R52	10 M	5 %	
R53	560 K	5 %	

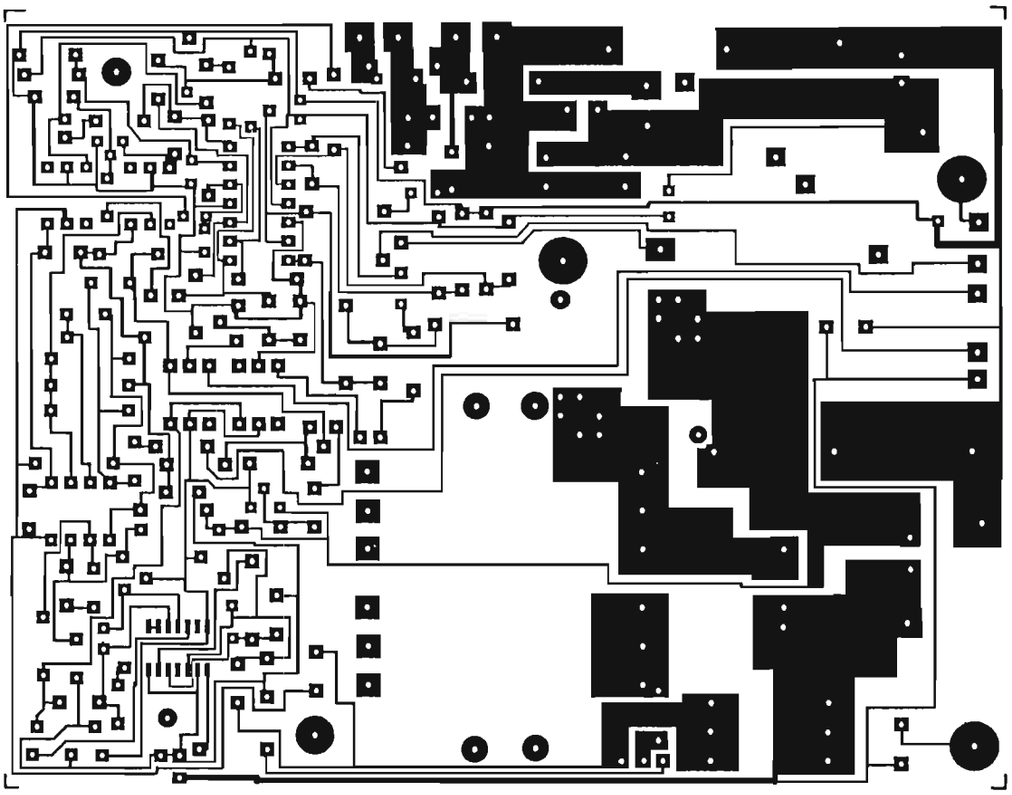

CN88 DC/DC

ELECTRONIQUE

DOSSIER TECHNIQUE DU CHARGEUR CN888 DC/DC COMPRENANT :

. SCHEMA DE PRINCIPE ..... PAGE 1

. IMPLANTATION DES COMPOSANTS ..... PAGE 2

. TRACE DU CIRCUIT IMPRIME..... PAGE 3

. LISTE DES COMPOSANTS RESISTANCES ..... PAGE 4

. "" "" CONDENSATEURS..... PAGE 5

. "" "" SEMI CONDUCTEUR + DIVERS..... PAGE 6

ELECTRONIQUE

KSA 20 10505 000

CHARGEUR NAGRA DC/DC CN88

NOMENCLATURE DES COMPOSANTS DU CHARGEUR DC/DC NAGRA D CN88 (suite)

- SEMI-CONDUCTEURS :

IND.	REFERENCE	FABRICANT	OBSERVATIONS
DZ1	BZX 55C 5.6V	ITT	
DZ2	BZX 55C 5.6V	ITT	
DZ3	BZX 55C 5.6V	ITT	
DZ4	BZX 55C 5.6V	ITT	
D1	N C		
D2	1N 4148/BAV21	ITT	
D3	MUR 860	MOTOROLA	
D4	MUR 860	MOTOROLA	
D5	1N 4148	ITT	
LED4	DIAM 3MM	TFK	EN FACE AVANT:Ve SUP à10%
LED1	DIAM 3MM	TFK	EN FACE AVANT: REGUL I
LED2	DIAM 3MM	TFK	SUR CIRCUIT
LED3	DIAM 3MM	TFK	SUR CIRCUIT
T1	2N 2907 A	MOTOROLA	
T2	2N 2222 A	MOTOROLA	
T3	IRFZ 44	IR	
T4	2N 2222 A	MOTOROLA	
T5	2N 2222 A	MOTOROLA	
CI1	MC 34129 D	MOTOROLA	
CI2	LM 358	MOTOROLA	
CI3	SL 5500	PHILIPS	
CI4	SL 5500	PHILIPS	
CI5	SL 5500	PHILIPS	
CI6	LP 324 N	N S	
CI7	SL 5500	PHILIPS	
DIVERS :			
L1	CN88L1DC	CNB EL.	SELF D'ENTREE
L2	CN88L2DC	CNB EL.	SELF DE SORTIE
TR	CN88TRDC	CNB EL.	TRANSFO.
FUS 1	FAU00313577	SCHURTER	SUPPORT FUSIBLE
	FEK00311663	SCHURTER	ADAPT. 5 x 20
	FED00311661	SCHURTER	ADAPT. 6.3 x 32

NOMENCLATURE DES COMPOSANTS CHARGEUR DC/DC NAGRA CN88 (SUITE)

- CONDENSATEURS

IND	VALEUR	TENSION SERVICE	TYPE	FABRICANT
C1	100 µF	35 VDC	C135	PHILIPS
C2	2200 µF	35 VDC	C135	PHILIPS
C3	1 nF	63 VDC	CERAM	
C4	N I			
C5	N I			
C6	N I			
C7	1 nF	63 VDC	CERAM	
C8	1 µF	63 VDC	PM	PHILIPS
C9	4700 pF	63 VDC	CERAM	PHILIPS
C10	470 pF	63 VDC	CERAM	PHILIPS
C11	0.68 µF	63 VDC	PM	THOMSON
C12	4700 pF	63 VDC	CERAM	THOMSON
C13	47 nF	63 VDC	CERAM	THOMSON
C14	1 µF	35 VDC	TANTAL	AVX
C15	N I			
C16	N I			
C17	470 pF	63 VDC	CERAM	
C18	220 µF	35 VDC	C135	PHILIPS
C19	220 µF	35 VDC	C135	PHILIPS
C20	220 µF	35 VDC	C135	PHILIPS
C21	1 µF	35 VDC	TANTAL	AVX
C22	0.22µF	63 VDC	PM	
C23	N I			
C24	220 µF	35 VDC	C135	PHILIPS
CEB	10 nF	63 VDC	CERAM	AVX
CES	N I			
CSB	10 nF	63 VDC	CERAM	AVX
C101	1 µF	63 VDC	PM	
C102	10 nF	63 VDC	CERAM	AVX
C103	10 nF	63 VDC	CERAM	AVX

- RESISTANCES :

IND.	VALEUR	TOLERANCE	PUISSANCE
R1	30.1 K	1 %	
R2	30.1 K	1 %	
R3	4.7 K	5 %	
R4	4.7 K	5 %	
R5	33 K	5%	
R6	3.9 K	5 %	
R7	240 K	1 %	
R8	34 K	1 %	
R9	46.4 K	1 %	
R10	N I		
R11	N I		
R12	N I		
R13	0.1E	5 %	3 W
R13'	0.1E	5 %	3 W
R13"	0.1E	5 %	3 W
R14	56 K	5 %	
R15	100 K	5 %	
R16	200	5 %	
R17	1.8 K	5 %	
R18	430 K	1 %	
R19	33 K	1 %	
R20	46.4 K	1 %	
R21	56 K	5 %	
R22	N I		
R23	10 E	5 %	
R24	1.8 K	5 %	
R25	8.2 K	1 %	
R26	15 K	5 %	
R27	3.24 K	1 %	
R28	49.9 K	1 %	
R29	4.7 K	5 %	
R30	46.4 K	5 %	
R31	0.1E	5 %	
R32	56 K	1 %	
R33	46.4 K	1 %	
R34	12 K	5 %	
R35	33 K	5 %	
R36	27 K	5 %	
R37	22 K	5 %	
R38	46.4 K	1 %	
R39	38.3/40.2 K	A AJUSTER	
R40	560 K	5 %	
R41	10 K	5 %	
R42	3.3 K	5 %	
R43	10 K	1 %	
R44	10 K	1 %	
R45	56 K	1 %	
R46	403 K	1 %	
R47	100 K	5 %	
R48	4.7 K	5 %	
R49	620	5 %	
R50	3.9 K	5 %	
R51	110 K	5 %	
R52	10 M	5 %	
R53	560 K	5 %	

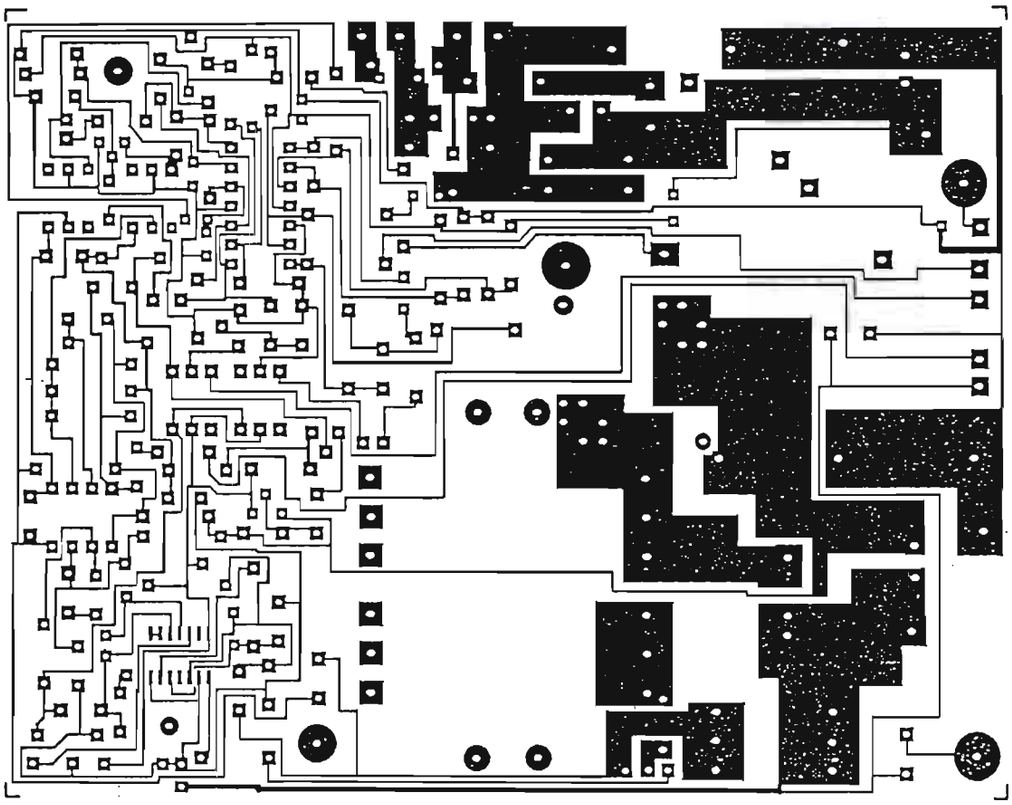

CN88 DC/DC

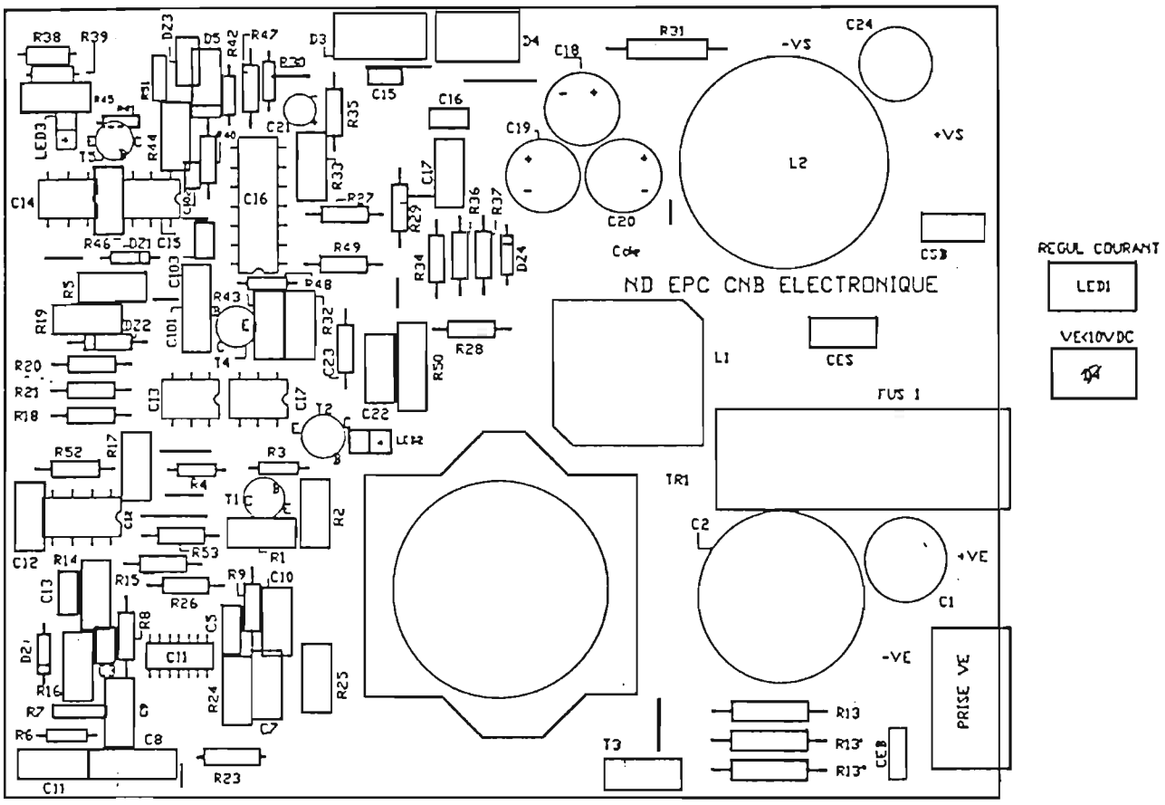
ND EPC CNB ELECTRONIQUE
REGUL COURANT
LED1
VE<10VDC
PRISE VE
-VS
+VS
+VE
-VE
L1
L2
TR1
FUS 1
CES
CSB
CEB
T1
T2
T3
T4
T5
LED3
LED2
C1
C2
C8
C11
C12
C13
C14
C15
C16
C17
C18
C19
C20
C21
C22
C23
C24
C101
C103
R1
R2
R3
R4
R5
R6
R7
R8
R9
R13
R13'
R13"
R14
R15
R16
R17
R18
R19
R20
R21
R23
R24
R25
R26
R27
R28
R29
R30
R31
R32
R33
R34
R35
R36
R37
R38
R39
R42
R43
R44
R45
R46
R47
R48
R49
R50
R52
R53
D21
D22
D23
D24
D3
D4
D5

CN88 DC/DC

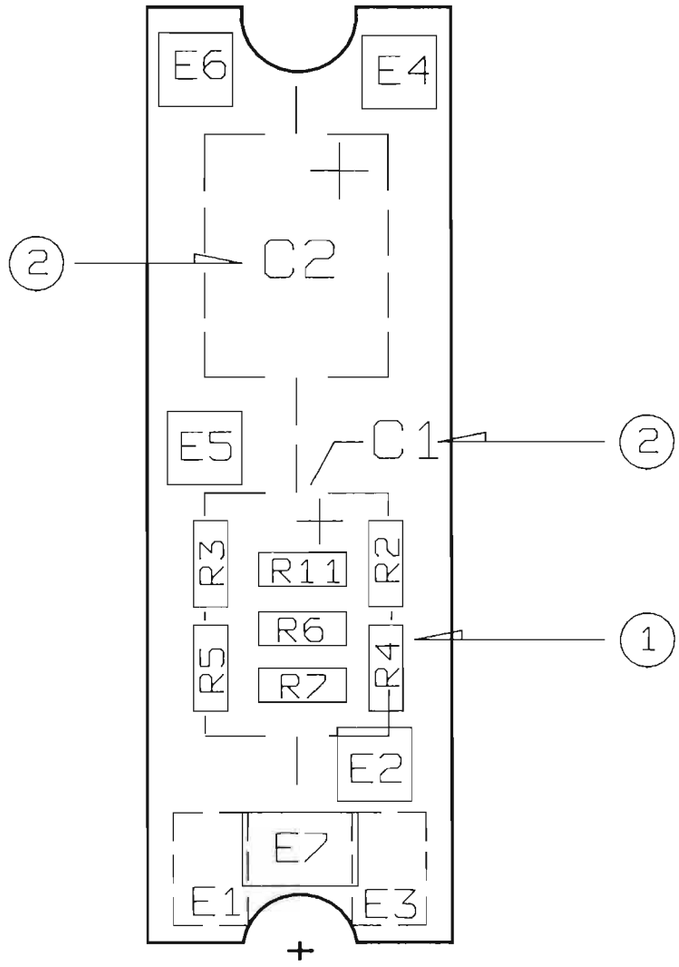

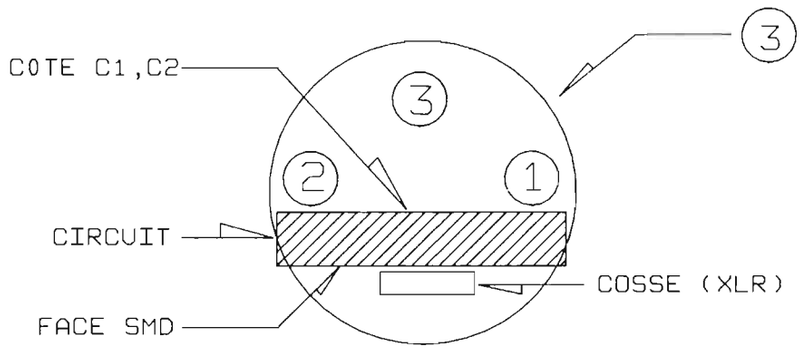

XLR FEMELLE
VUE COTE CABLAGE

1 FACE 1, COMPOSANTS SMD

2 FACE 2, COTE C1, C2

3 SOUDAGE,ASSEMBLAGE XLR,
AU FINAL, VOIR 7010550000

NAGRA	AUDIO DIVISION	KUDELSKI SA CH-1033 CHESEAUX SWITZERLAND
DRAW BY: GA DATE: 04-04-93	DIGITAL TAPE RECORDER NAGRA D LINE ATTENUATOR PRINTED-WIRING ASSEMBLY	
CHECK BY: DATE:	--- 9110550000	REV A
	RELEASE: 04-04-93 SCALE: ∿	SHEET: 1 / 1

This drawing is confidential and may not be divulged in whole or in part to a third party

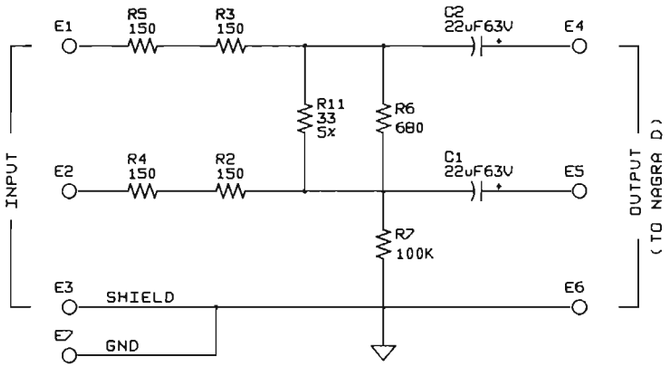

E1 TO PIN 2 (XLR FEMALE)
E2 TO PIN 3 (XLR FEMALE)
E3 TO PIN 1 (XLR FEMALE)

E4 TO PIN 2 (XLR MALE)
E5 TO PIN 3 (XLR MALE)
E6 TO PIN 1 (XLR MALE)

NAGRA	AUDIO DIVISION	KUDELSKI SA CH-1033 CHESEAUX SWITZERLAND
DRAW BY: GA DATE: 04-04-93	DIGITAL TAPE RECORDER NAGRA D LINE ATTENUATOR SCHEMATIC	
CHECK BY: DATE:	--- 0910550000	REV A
	RELEASE: 04-04-93 SCALE: ~	SHEET: 1/1

This drawing is confidential and may not be divulged in whole or in part to a third party

IH1
5.0

NAGRA CH-1033 Cheseaux Switzerland

Nbre p.:

Modif. A B C D E F

Matière
Désign.
Dimens.

Traitement des surfaces

Observation

Tol. générales

Cotes

Trous

Fan. pièces

Copie à

ND-LINE INPUT ATTENUATOR (CÂBLE)

NAGRA D

Echelle ~

Dessiné 21.01.93

Visa GA

7010550000

BCN

XLR (NC 3FX)
FICHE FEMELLE 3 PÔLES

CÂBLE BLINDÉ GRIS (2x 0,22)
4196132330 LONG. 1500 mm

CORPS D'ATTENUATEUR 0110550002
CIRCUIT ATTENUATEUR 9110550000

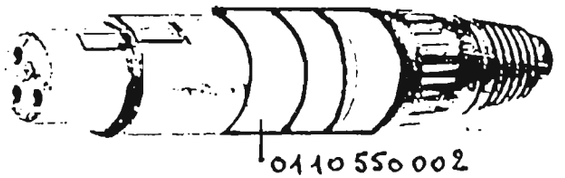

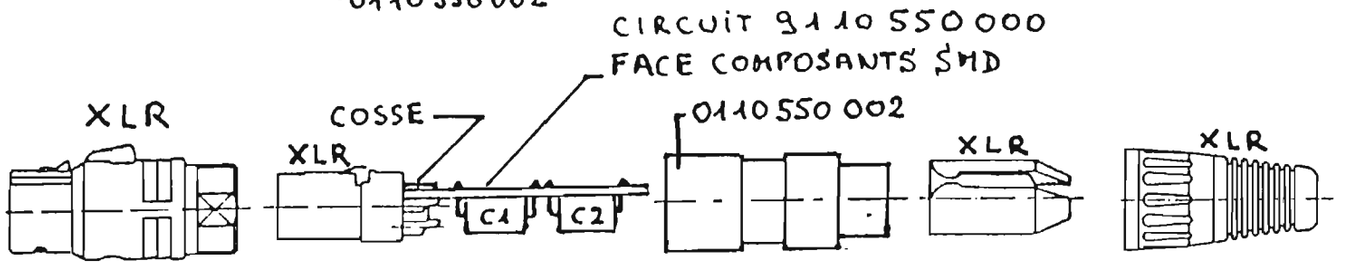

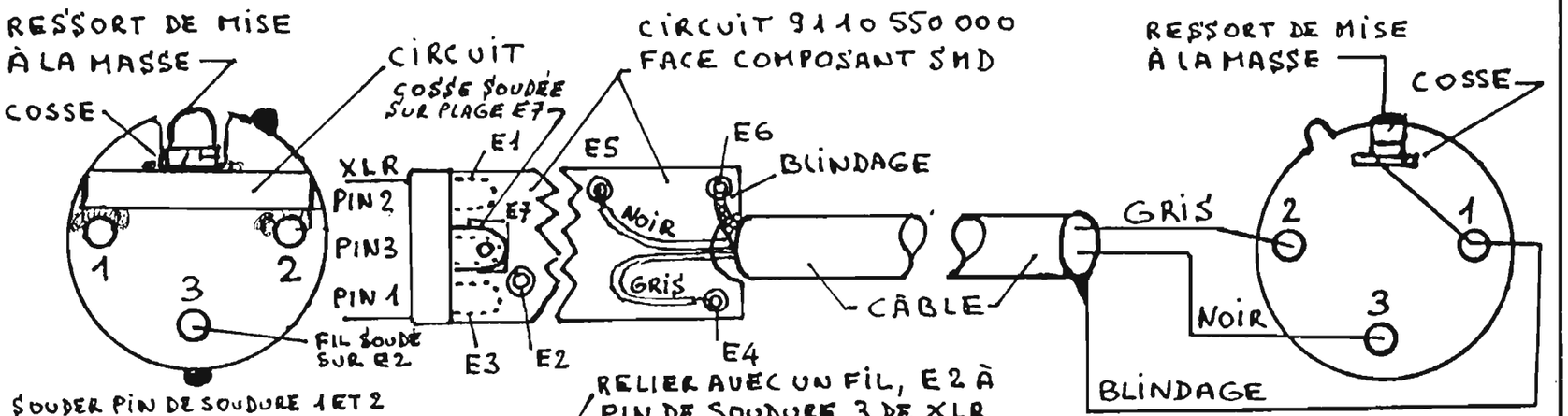

SOUDER PIN DE SOUDURE 1 ET 2
DE XLR SUR LES PLAGES E3 ET E1
DU CIRCUIT

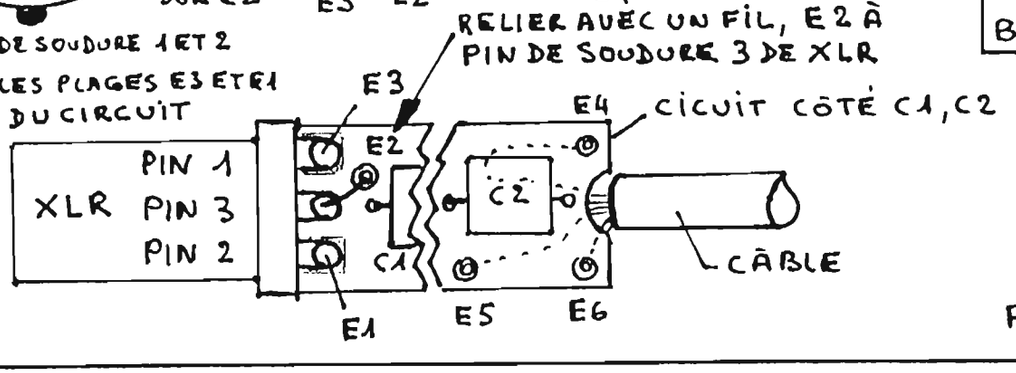

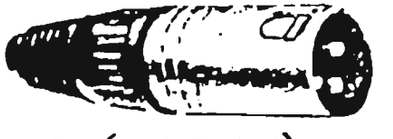

XLR (NC 3MX)
FICHE MÂLE 3 POLES

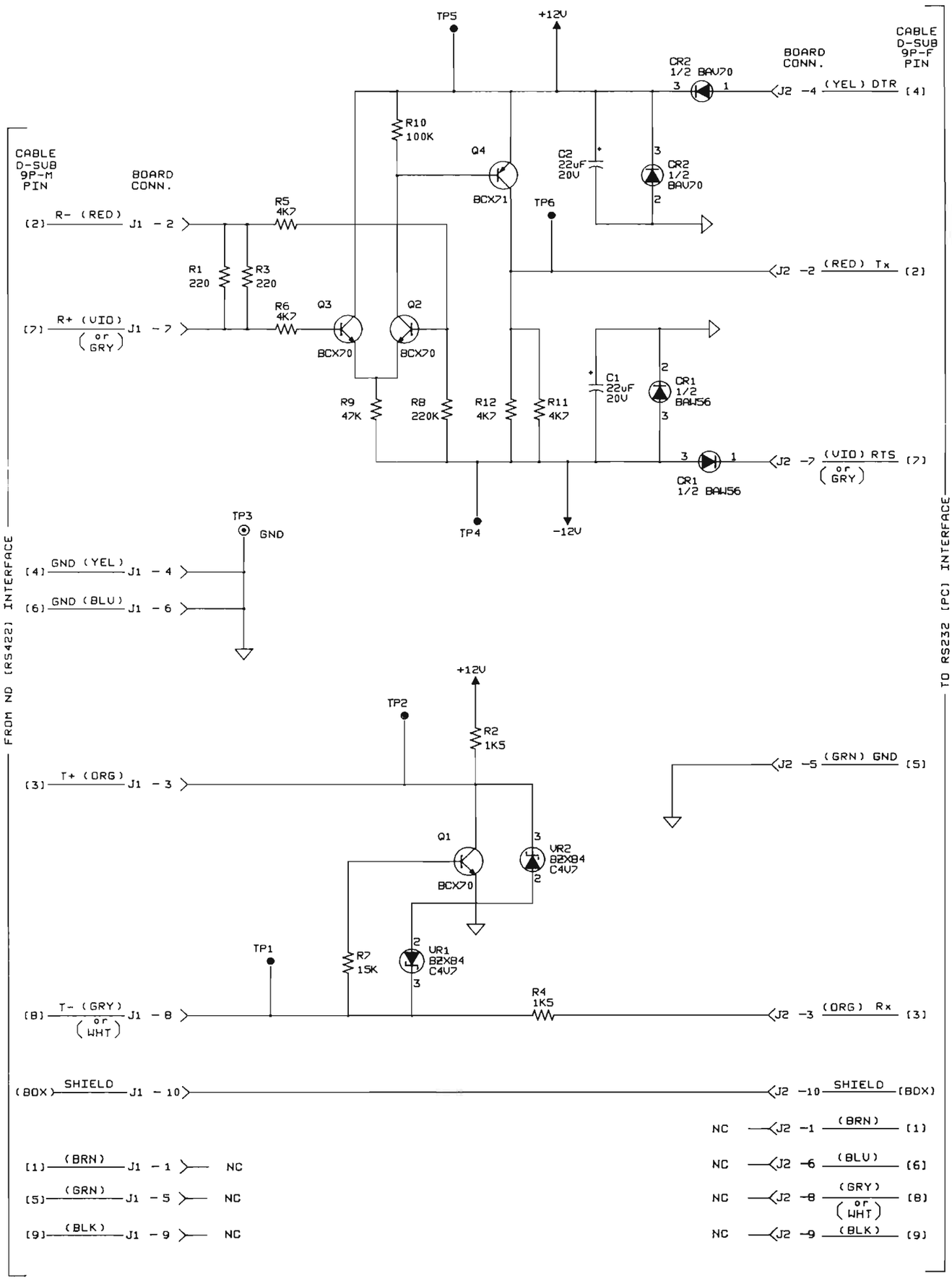

NAGRA

NAGRA	AUDIO DIVISION	KUDELSKI SA CH-1033 CHESEAUX SWITZERLAND
DRAW BY: GA DATE: 04-04-93	DIGITAL TAPE RECORDER NAGRA D INTERFACE ND-PCA (RS422/232) SCHEMATIC	
CHECK BY: DATE:	--- 0910540000	REV A
	RELEASE: 04-04-93 SCALE: ~	SHEET: 1/1

This drawing is confidential and may not be divulged in whole or in part to a third party

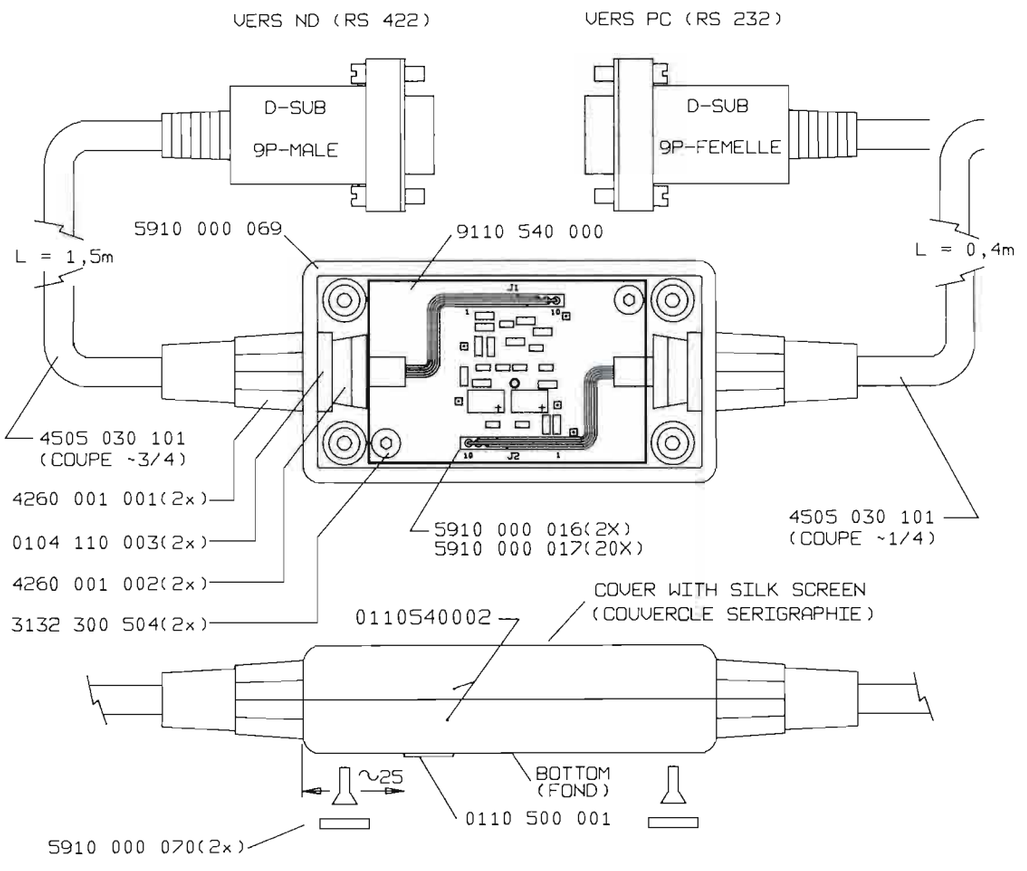

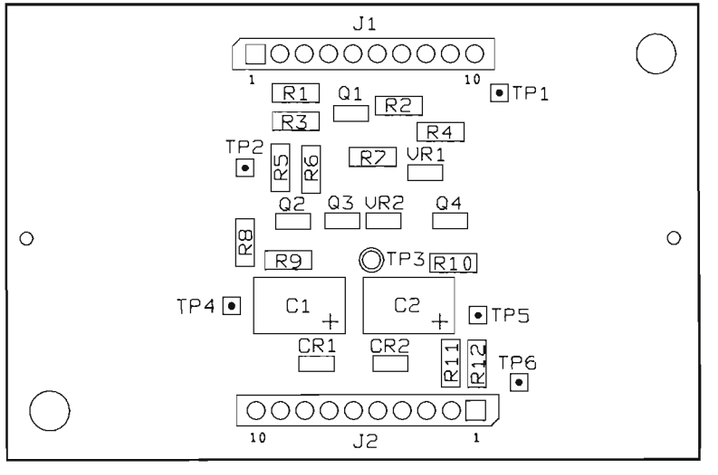

CABLAGE		WIRING
J1,J2	Couleur	COLOUR
Pin 1	BRUN	BRN
2	ROUGE	RED
3	ORANGE	ORG
4	JAUNE	YEL
5	VERT	GRN
6	BLEU	BLU
7	VIOLET (OU GRIS)	VIO (OR GRY)
8	GRIS (OU BLANC)	GRY (OR WHT)
9	NOIR	BLK
10	BLINDAGE	SHIELD

NAGRA AUDIO DIVISION KUDELSKI SA CH-1033 CHESEAUX SWITZERLAND

DRAW BY: GA
DATE: 04-04-93
CHECK BY:
DATE:

DIGITAL TAPE RECORDER NAGRA D
INTERFACE ND-PCA (RS422/232)
WIRING & ASSEMBLY

C3 7010540000 REV[-]

RELEASE: 04-04-93 SCALE: ~ SHEET: 1/1

This drawing is confidential and may not be divulged in whole or in part to a third party

WARNING: HANDLE ONLY AT STATIC SAFE WORK STATION
ATTENTION: MANIPULATION UNIQUEMENT AUTORISEE SUR POSTE DE TRAVAIL PROTEGE
ACHTUNG: HANDHABUNG DAHER NUR AN GESCHÜTZTEN ARBEITSPLÄTZEN ERLAUBT

NAGRA AUDIO DIVISION KUDELSKI SA CH-1033 CHESEAUX SWITZERLAND

DRAW BY: GA
DATE: 04-04-93
CHECK BY:
DATE:

DIGITAL TAPE RECORDER NAGRA D
INTERFACE ND-PCA (RS422/232)
PRINTED-WIRING ASSEMBLY

C3 9110540000 REV[A]

RELEASE: 04-04-93 SCALE: ~ SHEET: 1/1

This drawing is confidential and may not be divulged in whole or in part to a third party

10

June 1994

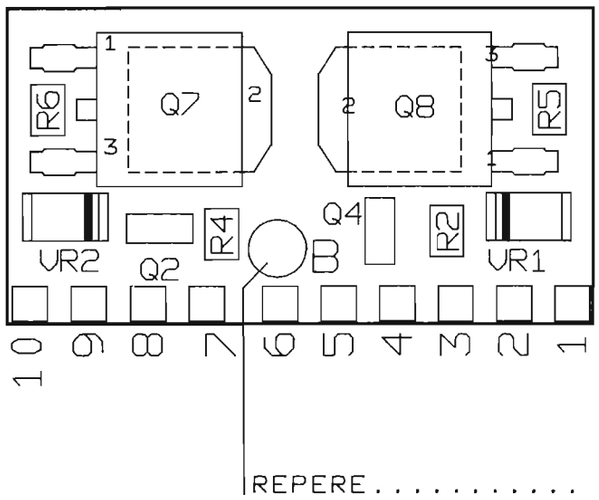

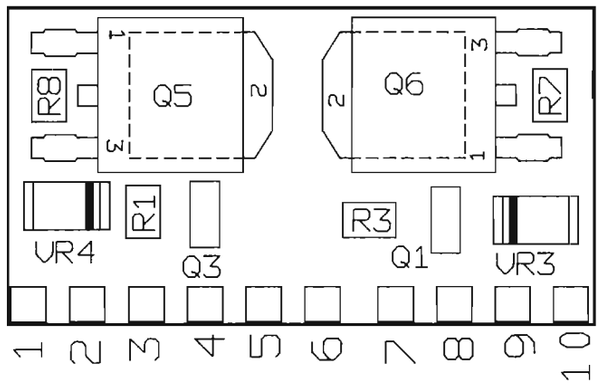

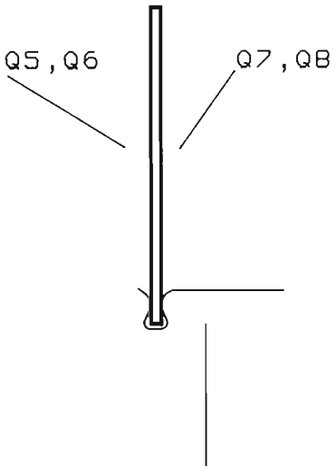

WARNING: HANDLE ONLY AT STATIC SAFE WORK STATION
ATTENTION: MANIPULATION UNIQUEMENT AUTORISEE SUR POSTE DE TRAVAIL PROTEGE
ACHTUNG: HANDHABUNG DAHER NUR AN GESCHÜTZTEN ARBEITSPLÄTZEN ERLAUBT

NAGRA	AUDIO DIVISION	KUDELSKI SA CH-1033 CHESEAUX SWITZERLAND
DRAW BY: GA DATE: 04-04-93	DIGITAL TAPE RECORDER NAGRA D HYBRIDE MOTOR SWITCHING PRINTED-WIRING ASSEMBLY	
CHECK BY: DATE:	9110280000	REV B
	RELEASE: 04-04-93 / SCALE: ~	SHEET: 1 / 1

This drawing is confidential and may not be divulged in whole or in part to a third party

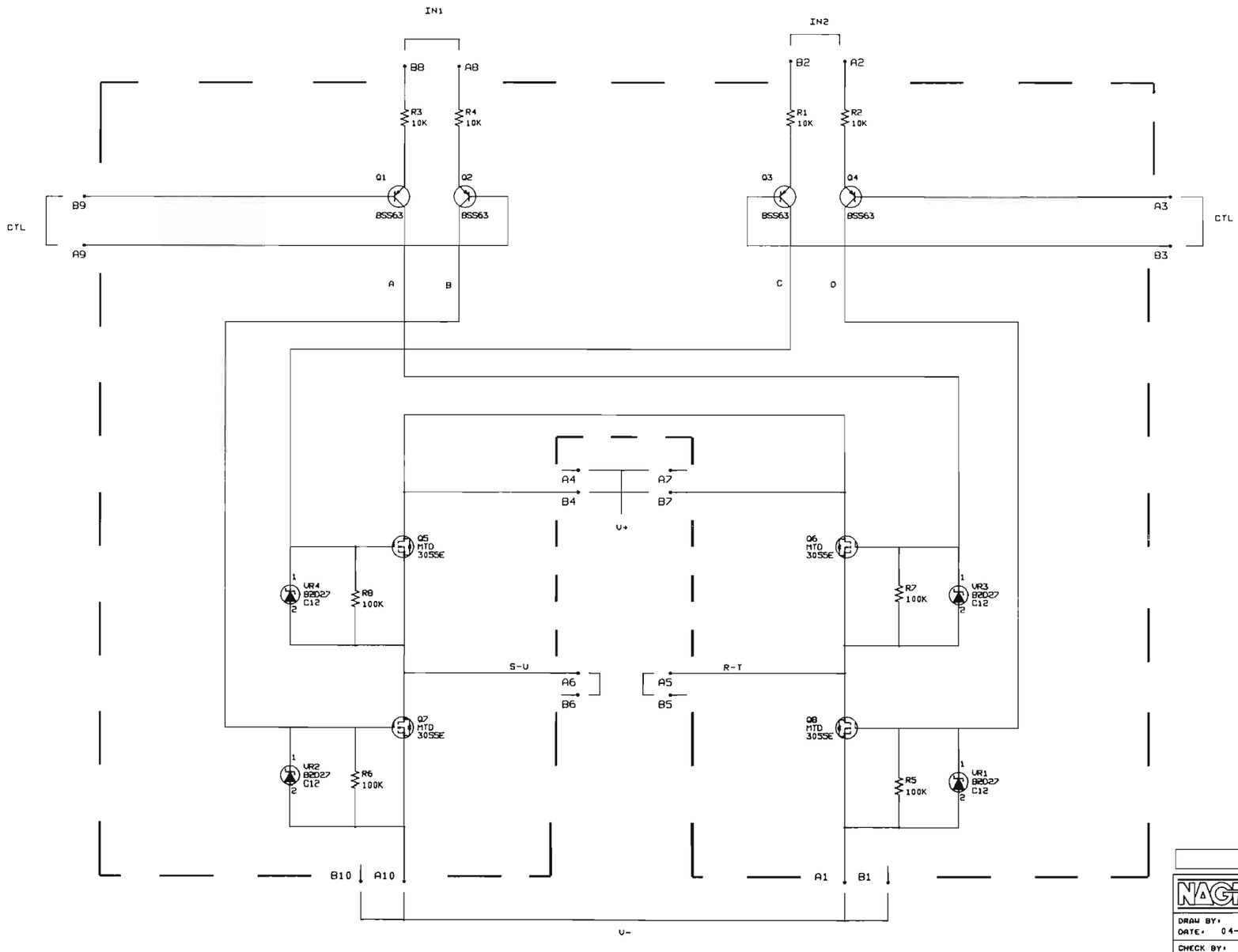

NAGRA AUDIO DIVISION
KUDELSKI SA
CH-1033 CHESEAUX
SWITZERLAND

DRAW BY: GA
DATE: 04-04-93
CHECK BY:
DATE:

DIGITAL TAPE RECORDER NAGRA D
HYBRIDE MOTOR SWITCHING
SCHEMATIC

0910280000 REV B

RELEASE: 04-04-93 SCALE: ~ SHEET: 1/1

This drawing is confidential and may not be divulged in whole or in part to a third party