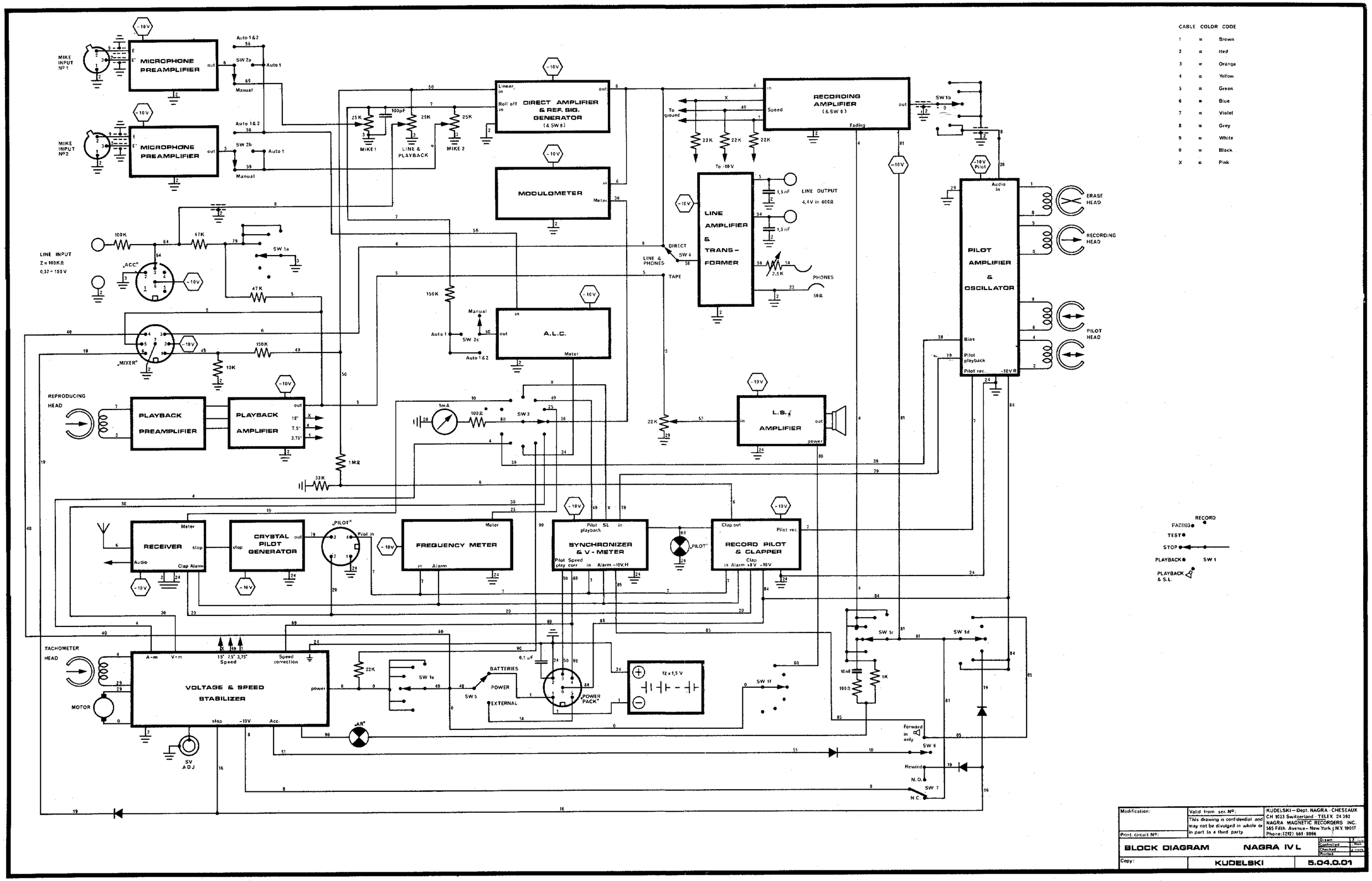

CABLE	COLOR	CODE
1	=	Brown
2	=	Red
3	=	Orange
4	=	Yellow
5	=	Green
6	=	Blue
7	=	Violet
8	=	Grey
9	=	White
0	=	Black
X	=	Pink

Modification:	Valid from ser. Nº:	KUDELSKI – Dept. NAGRA · CHESEAUX CH 1033 Switzerland · TELEX 24 392 NAGRA MAGNETIC RECORDERS INC. 565 Fifth Avenue – New York ; N.Y. 10017 Phone: (212) 661-8066
Print. circuit Nº:	This drawing is confidential and may not be divulged in whole or in part to a third party.	
BLOCK DIAGRAM	NAGRA IV L	Drawn / Controlled / Checked / Printed
Copy:	KUDELSKI	5.04.0.01