NAGRA IV-S
IV-S TIME CODE

PORTABLE ANALOGUE AUDIO TAPE RECORDER

SERVICE MANUAL

(KSA code No. 20 06 007 251)

TABLE OF CONTENTS

CHAPTER I	INSTRUCTION MANUAL
CHAPTER II	SERVICE MANUAL
CHAPTER III	AUDIO CALIBRATION
CHAPTER IV	PILOT & TIME CODE
CHAPTER V	ACCESSORIES
CHAPTER VI	TECHNICAL INFORMATION
CHAPTER VII	SCHEMATICS
CHAPTER VIII	MODIFICATION SHEETS

Kudelski S.A.
NAGRA Tape Recorder Manufacturer
CH-1033 Cheseaux / SWITZERLAND
phone + 41 (021) 732 01 01
telex 459 302 nagr ch
telefax + 41 (021) 732 02 58
http://www.nagraaudio.com

May 1991
Second Edition

Copyright reserved for all countries
Printed in Switzerland

NAGRA, KUDELSKI, NEOPILOT, NEOPILOTTON
NAGRASTATIC, NAGRAFAX
are registered trade – marks, property of
KUDELSKI S.A.
NAGRA Tape Recorder Manufacturer

NAGRA / KUDELSKI certifies that this instrument was thoroughly inspected and tested prior to leaving our factory and is in accordance with the data given in the accompanying test sheet.

We guarantee the products of our own manufacture against any defect arising from faulty manufacture for a period of one year from the date of delivery. This guarantee covers the repair of confirmed defects or, if necessary, the replacement of the faulty parts, excluding all other indemnities.

All freight costs, as well as customs duty and other possible charges, are at the customer's expense. Our guarantee remains valid in the event of emergency repairs or modifications being made by the user. However we reserve the right to invoice the customer for any damage caused by an unqualified person or a false manoeuvre by the operator.

We decline any responsibility for any and all damages resulting, directly or indirectly, from the use of our products.

Other products sold by KUDELSKI S.A. are covered by the guarantee clauses of their respective manufacturers. We decline any responsibility for damages resulting from the use of these products.

We reserve the right to modify the product, and / or the specifications without notice.

INSTRUCTION MANUAL 1

CHAPTER I "INSTRUCTION MANUAL"

TABLE OF CONTENTS

Please refer to your instruction manual :

- Nagra IV-S — No 20 06 004 161
- Nagra IV-S TIME CODE — No 20 06 007 161

May 1991

CHAPTER I "INSTRUCTION MANUAL"

TABLE OF CONTENTS

		Page No.
1.1	**Introduction**	I 1.1-1
1.2	**Power supply:**	I 1.2-1
	External power supply	I 1.2-1
1.3	**Danger of reverse polarization**	I 1.3-1
1.4	**Controls:** Description and use	I 1.4-1 to 1.4-8
1.5	**Connectors**	I 1.5-1 to 1.5-4
1.6	**Tape speed and standard selection**	I 1.6-1
1.7	**Loading a tape on the recorder**	I 1.7-1
1.8	**First time operation:**	I 1.8-1 to 1.8-2
	Recording	I 1.8-1
	Recording with microphone	I 1.8-1
	Recording a line signal	I 1.8-2
	Playing back a recorded tape	I 1.8-2
	Working with headphones	I 1.8-2
1.9	**Specifications**	I 1.9-1 to 1.9-5

1.1 INTRODUCTION

The Nagra IV–S was introduced originally in 1971. It is a portable 6.35 mm (1/4") analogue audio tape recorder designed for high quality music recording, cinema and television applications.

Many mechanical and electronic modifications have been made to the machine since its release, to adapt it according to modern day requirements. Despite all these modifications, the machine remains remarkably similar to the original. The last major development was made in 1984 when the SMPTE / EBU 80 bits centre-track time code was added.

The Nagra IV–S can be delivered in three different versions all of which are available in either NAB or CCIR equalization. These versions are as follows:

NQS–LSP	Non pilot
NQS–L	Pilot
NQS–TC	Time code

Each version has three speeds: 38 cm/s, 19 cm/s and 9.5 cm/s (15, 7½ and 3¾ ips) with the following standards: NAB, CCIR and NAGRAMASTER (at 15 ips only).

The Nagra IV–S is a stereo recorder with two 2 mm audio tracks (2.75 mm tracks on the NQS–LSP non-pilot machines) and a central track for pilot or time code uses, depending on the machine type.

The two audio channels may be used with either the two internal microphone pre–amplifiers (switchable between Dynamic, T power and Phantom power) or with a current line input, via the QCSE cable. The two potentiometers on the front panel may be mechanically "GANGED" together for easier control, by moving the small white lever located on the green control.

The NAGRA IV–S also contains a switchable limiter, a built–in loudspeaker, provision for connection to an external noise reduction system and an internal reference generator for line up, and calibration purposes.

Optionally the machine may be fitted with either the NAGRASYNC pilot option or the SMPTE/EBU 80 bits time code option.

The machine may also be powered from either an external supply ATN–3 or internal batteries. (See page I 1.2-1).

The IV–S may also be used with the QGB 10" reel adaptor, to allow the use of larger reels for longer recording and playback.

1.2 POWER SUPPLY

All models of the NAGRA IV-S may be powered by an external power supply (ATN-3) or alternatively by internal batteries. The IV-S will accept voltages ranging from -11 V to -30 V with peaks of up to -35 V.

The batteries are placed in the bottom of the machine and the polarity is marked inside the compartment which is opened by turning the two fasteners with a screwdriver or a small coin. All the batteries MUST be orientated in the same direction as indicated on the base of the battery compartment.

The NAGRA IV-S houses twelve 1.5 V cells having a maximum diameter of 33.5 mm and a length of between 59.5 and 62.5 mm. The cells manufactured under the following standards are generally acceptable: CEI R-200, ASA"D" and L90.

It is important to remember that corrosive material can leak out of flat batteries, causing severe damage to the recorder, and therefore it is recommended not to leave batteries in the machine during periods of storage.

The external supply is fed into the machine via connector (48) on the right-hand side of the machine. Rechargeable batteries may also be used and can be charged using the ATN-3C (order no 14376) which includes the charger circuitry.

To check the state of the batteries or the external supply, set modulometer switch (12) to the "BATT" position: in this case the red needle of the modulometer indicates the battery voltage on the (volts / cell) scale and the green needle indicates the voltage needed by the motor. The difference between these two readings shows the battery reserve.

When the power supplied to the machine is insufficient for normal operation of the recorder, the rotary indicator "SPEED AND POWER" on the front panel of the machine will turn black. The IV-S will function when the power is as low as 12 V (at 15 ips /38 cm/s) and down to as low as 10.5 V at the lower speeds. (These figures correspond to a machine in perfect condition and working at room temperature).

NOTE: Time Code machines will stop recording Time code when the batteries become flat before the audio recording is affected.

When using an external supply, selector switch (3) must be in the "EXT" position. It must be in the "BATT" position when internal batteries are in use. It is not necessary to remove the batteries when working with an external supply (and vice versa).

NOTE: For information on power supply to the time code circuits of the IV-S TC refer to page IV 6.1-1.

EXTERNAL POWER SUPPLY

On the right-hand side of the machine there is a 6 pin Tuchel-type T 3403 connector marked "POWER PACK". The corresponding plug is the T 3400/1.

The connections are as follows:

pin 1 = Battery negative
pin 2 = Chassis (positive)
pin 3 = Pilot playback output
pin 4 = Speed correction signal input
pin 5 = Negative external supply
pin 6 = -10 V stabilized output.

1.3 DANGER OF REVERSE POLARIZATION

A reverse polarized power supply (negative to the chassis) WILL damage the machine. To reduce the risk of serious damage a diode is placed in parallel with the supply which will be short-circuited in the event of reverse polarization. If such an event occurs with normal "dry cells", they will be rapidly exhausted and no further damage will occur.

On the other hand, certain accumulators are capable of supplying sufficient current (in excess of 8 amperes) such that the internal wiring of the machine will become hot enough to cause its insulation to decompose. This will then liberate hydrochloric acid gas which causes considerable corrosion. If this happens, contact your nearest NAGRA agent immediately.

NAGRA IV-S TC

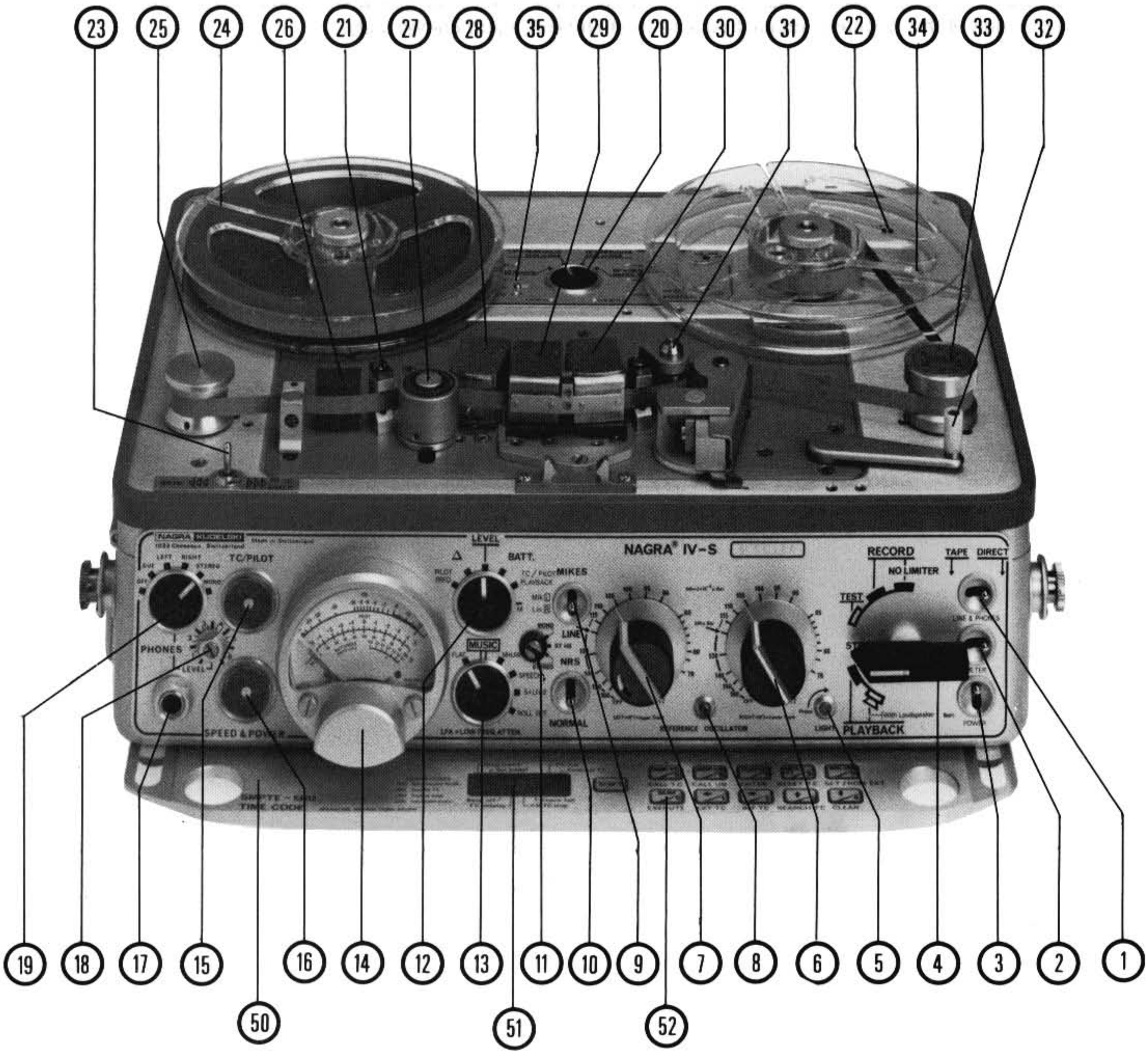
23
25
24
26
21
27
28
35
29
20
30
31
22
34
33
32
NAGRA IV-S
LEVEL
BATT.
MIKES
TC/PILOT
PHONES
MUSIC
NRS
NORMAL
RECORD
NO LIMITER
TAPE
DIRECT
TEST
PLAYBACK
SPEED & POWER
19
18
17
15
16
14
12
13
11
10
9
7
8
6
5
4
3
2
1
50
51
52

1.4 CONTROLS: DESCRIPTION AND USE

FRONT PANEL

1. TAPE / DIRECT SWITCH (line and phones)

When in "TAPE" position, the signal is reproduced directly from the tape.

When in "DIRECT" position, there are two posibilities:

A. When recording, the signal is available before arriving on the tape.

B. When playing back, the signal may be adjusted by means of the level controls and corrected by filter switch (13).

2. TAPE / DIRECT (snap switch)

This switch affects the meter in the same way that the previous switch affects the outputs. Thus when it is held to the left, the meter will display the "OFF TAPE" signal whereas normally it displays the "DIRECT" signal.

3. POWER SELECTION SWITCH (EXT / BATT)

The NAGRA IV-S may be powered by either internal batteries or by an external source which may be selected using this switch. See also the "POWER SUPPLY" section of this chapter. (Page I 1.2-1).

4. MAIN FUNCTION SELECTOR (six position rotary)

STOP — Stops the machine completely from any function, and will slightly move the pinch wheel away from the capstan to prevent a flat being caused on the pinch roller. In this mode no circuits are powered (with the exception of the RAM and REAL TIME CLOCK in machines fitted with SMPTE / EBU time code). See section IV "TIME CODE AND PILOT" of this manual for further details.

TEST — Will power all circuits and allow level adjustment by means of level controls (6) and (7). In this mode the motor is not powered. All indications of the modulometer will be of the DIRECT input, irrespective of the position of tape / direct switch (1).

RECORD — Is the first of the two RECORD positions and corresponds to RECORD WITH LIMITER where the recording level is limited to +4 dB. This level remains constant when the input level is between +4 dB and +10 dB. Thus in this position tape saturation cannot occur and distortion is avoided.

RECORD (no limiter) — The limiter is inactivated in this position so that recordings that should be saturated can be made. (e.g. Gun shots or explosions).

PLAYBACK — Is the first of the two playback possibilities and corresponds to playback of the tape to the headphones and line outputs only.

PLAYBACK (with loudspeaker) — This position is exactly as above, only it allows monitoring via the internal loudspeaker at the same time. This is also the only position of the main function selector that permits the FAST FORWARD function to be performed (see page I 1.4-6).

5. LIGHT (push button)

When pressed, the modulometer (and time code display on T.C. machines) will be illuminated as long as the button is pressed, providing there is sufficient power available to the machine. If this button is pressed and then turned to the right the lamps will remain "ON". This button is active when the main function selector is in any position other than "STOP".

6. LEVEL CONTROL (right–green–lower track)

7. LEVEL CONTROL (left–red–upper track)

These are the main level controls for the two audio channels. They may be linked (ganged) by means of the small white lever situated on the left–hand knob (green) which activates a friction clutch. The 200 µbar point on each channel corresponds to an accoustic pressure of 200 µbar on the capsule of a 200 Ohm dynamic microphone having a 0.2 mV/µbar sensitivity. In this case the modulometer reading should be 0 dB.

8. REFERENCE OSCILLATOR (push button)

On the lower edge of the front panel, between the left and right level control potentiometers. there is the reference generator push button. When this button is pressed, a composite 1.1 Khz signal with a 10 Khz 9th harmonic at a level of approximately –8 dB is injected into the "DIRECT" chain of the recorder.

The modulometer will show –8 dB. It is useful to record a short burst of this signal at the beginning of each reel of tape so as to enable the level of the playback chain to be accurately calibrated before the real recording is made. This also permits adjustment of the record head azimuth in the field without test equiptment. At this point the subject of print–through should be mentioned. After a certain period of time, a recording may be copied (at reduced level) onto adjacent turns of a tape on a reel. This produces a perceptible echo during the silences preceeding or following a strong sound.

It is thus recommended to leave a pause of two or three turns of tape after recording the "REF" signal.

9. MIKES / LINE SWITCH

This three position switch is the main input selection switch. It allows the operator to select between MIC or LINE input on both channels simultaneously or "LINE" input on channel 2 (right) and simultaneously "MIC" input on channel 1 (left). The upper position allows "LINE" inputs to both channels via connector (41), and the other positions allow selection between "MIC" inputs (36) and (37).

10. NRS / NORMAL SWITCH

This switch allows the use of an external noise reduction system when connected to the IV–S via connector (42).

When an external "NRS" system is not being used, this switch should remain in "NORMAL".

11. MONO / ST HS / STEREO SWITCH

This switch is used to select the mode of the audio outputs. The position of this switch may only be changed by means of a small screwdriver, to prevent accidental modification while using the recorder, and it selects the mode of the "DIRECT" chain.

MONO The input of each channel is fed to the output of both channels.

STEREO Each input is connected to its corresponding output.

ST HS (Stereo high sensitivity): As for "STEREO" but the sensitivity is 6 dB higher. This position is useful when the recording source level is very low. However, it must be noted that certain characteristics of the recorder such as signal–to–noise ratio and crosstalk are not quite as good in this mode.

12. MODULOMETER MODE SELECTION SWITCH

This is a six position rotary switch allowing different information to be displayed on the modulometer.
Each position is discribed below:

PILOT FREQUENCY

The red needle indicates on the pilot scale of the modulometer the frequency of the pilot signal from +4% to –4%, as determined by the QFMS frequency meter (if fitted), between the pilot signal either recorded or played back and the internal crystal or the external pilot reference signal via connector (44). (There will be no reading if the QFMS option is not fitted).
The green needle indicates on the dB scale the audio channel which has the highest recording level.

DELTA Δ

The red needle indicates on the % scale between 0 and 100%, the groove depth of a record made from recorded signals in accordance with NAB weighting, thus a 100% reading corresponds to a 50 µm vertical deviation of the cutting stylus.
The green needle gives the same indication as for pilot frequency.

LEVEL

The red needle indicates the "DIRECT" or the "RECORDING" level of the left channel (1) in dB.
The green needle indicates the "DIRECT" or the "RECORDING" level of the right channel (2) in dB.

BATT

The red needle indicates on the volt / cell scale the battery voltage.
The green needle indicates the voltage required by the motor.
The difference between the two readings shows the battery reserve.

TC / PILOT PLAYBACK

The red needle gives the same indication as for pilot frequency.
The green needle indicates on the % scale the level of the signal recorded or played back on the FM track. A deviation of 100% corresponds to an actual frequency deviation of 40 %.
On time code machines, the green needle indicates the time code playback level.

M (MOTOR)

The red needle indicates on the % scale the current through the motor. A reading of 100% corresponds to a current of 250 mA through the motor.
The green needle gives the same indication as in the pilot playback position.

13. FILTER SWITCH

This is a six position rotary switch affecting both channels.

FLAT The machine has a linear frequency response between 20 and 20000 Hz (Direct chain).

MUSIC A high pass filter is put in the direct chain, which has a response of –3 dB at 40 Hz.

M + LFA This puts the MUSIC filter and LOW FREQUENCY ATTENUATION of –7 dB at 40 Hz and –3 dB at 400 Hz into the direct chain.

SPEECH This puts a high pass filter of –3 dB at 80 Hz into the direct chain.

S + LFA This corresponds to the SPEECH filter and LOW FREQUENCY ATTENUATION of –7.5 dB at 80 Hz and –3 dB at 400 Hz.

ROLL OFF This position gives the direct chain strong low frequency attenuation, –10 dB at 100 Hz and –3 dB at 400 Hz.

14. MODULOMETER

This two needle meter is the visual indication of many functions and levels of the machine. The modulometer displays information according to the position of mode selector switch (12). All IV–S modulometers are fitted with two small lamps which will light up the display when switch (5) is pressed. The right–hand lamp will also light up the time code display, when the keyboard is out, via a small lens in the bottom of the modulometer on the time code version of the recorder.

The modulometer has 4 scales:

1. Recording level in dB
2. Frequency deviation in %
3. Groove depth and motor supply current
4. Battery voltage (volts / cell)

15. TC / PILOT INDICATOR

This rotary "SASS" type indicator shows a white segment when the frequency (in the case of a pilot machine) and the amplitude of the time code / pilot signal are correct.

NOTE: This only indicates the presence of a correct signal being fed to, or coming from the head, and does not guarantee correct recording of the signal. This should be checked by switching the modulometer to TC / PILOT playback (this does not function in the RECORD mode). In the case of a time code machine, the signal should also be verified by means of the display on the keyboard, because both the previous methods will show a signal even though the time code generator may have been stopped and the same time code will be recorded over and over again.
This indicator functions in all modes other than test.

16. SPEED AND POWER INDICATOR

This rotary "SASS" type indicator gives a quick visual indication that the machine is functioning correctly and will indicate a white segment when this is the case, and will turn black whenever any of the following conditions occur:

- Power supply voltage (batteries or external) becomes insufficient for correct operation of the machine.
- The motor current reaches its maximum limit, in this case voltage and speed stabilizer circuit A22 requires the motor to run faster, but this is not possible because the automatic current limiter circuit has been activated. (If this occurs during normal operation, then contact your nearest NAGRA agent.)
- Tachometric WOW and FLUTTER is out of tolerance. (Contact NAGRA agent).

Thus, when a white segment is indicated, the operator can be absolutely sure that the power supply is sufficient, that the motor current is correct, and that the tape speed is within tolerance.

17. HEADPHONES OUTPUT

This 1/4" jack type socket (type 297) is the headphones output socket accepting headphones with an impedance of anything from 25 Ohm to 600 Ohm. (Optimum value is 200 Ohm).

18. HEADPHONES VOLUME CONTROL

This small potentiometer is adjustable using a screwdriver and adjusts the level fed to headphones output connector (17).
Position 1 is the minimum and position 6 is the maximum.

19. HEADPHONES MODE SELECTOR

This is a six position rotary switch allowing the operator to select the signal which is sent to the headphones connector. It selects between CUE channel (FM centre track), left audio channel, right audio channel, mono or stereo. The first position of the selector is "OFF".

20. TAPE SPEED AND STANDARD SELECTOR

This is a four position rotary switch permitting the selection of the speed and standard of the IV–S in both record and playback.

Possible settings are:

$3\frac{3}{4}$ ips (9.525 cm/s) NAB/CCIR
$7\frac{1}{2}$ ips (19.05 cm/s) NAB/CCIR
15 ips (38.10 cm/s) NAB/CCIR
15 ips (38.10 cm/s) NAGRAMASTER

For best quality recordings the 15 ips speed is recommended. The 15 ips NAB / CCIR position is chosen when the recorded tape is to be played back on any machine other than a NAGRA T-AUDIO or NAGRA IV–S.
However, when this is not the case it is recommended to use the NAGRAMASTER position which has a different equalization and gives a better signal–to–noise ratio.

For normal recordings, the $7\frac{1}{2}$ ips speed is supplied. The $3\frac{3}{4}$ ips speed is available for those cases where the length of recording time of the tape is more critical than the actual quality of the recording.

21. BIAS SELECTOR

This switch makes it possible for the operator to modify the bias voltage using a small screwdriver when recording on special tapes for which the machine has not been calibrated. Each position of this switch corresponds to a bias variation of 5%.

22. PLAYBACK EQUALIZATION SELECTOR

This switch (also adjustable with a small screwdriver) offers the possibility to reproduce tapes recorded using the CCIR standard equalization on a machine that has been calibrated to the NAB standard equalization, and vice versa.

23. REWIND AND FAST FORWARD SWITCH

REWIND
REW. ◁◁◁

is possible with main selector (4) in any position other than STOP, assuming pinch roller lever (32) is in the fully open position.

FAST FORWARD
▷▷▷ **IN** 🔈 **ONLY**

is possible only with main function selector (4) in the playback (with loudspeaker) position and pinch roller lever (32) fully engaged.

The central position of this switch is OFF and this is the position that the switch should be in whenever the machine is not required to spool. Keeping it in this position will prevent accidental spooling of the tape when opening the pinch roller gate or playing back a recorded tape through the internal loudspeaker.

24. & 34. TAPE REELS

The IV–S can be used with reels up to a maximum diameter of 5" (127 mm) with the plexi–glass lid closed, or up to 7" (178 mm) with the lid open. However, if the QSET option is fitted to the machine the 7" (178 mm) reels may be used with the lid closed.
If it is necessary to use reels of up to 10" (254 mm), then the QGB large reel adapter may be used. See chapter V of this manual.

25. & 33. TENSION ROLLERS

These two rollers keep the tape tension constant and ensure correct tape handling and positioning. During normal use neither of these two rollers should be at either end of its travel. If this is the case refer to the MECHANICAL CALIBRATION section of this manual (section II Service manual, page II 2.3–1).

The two rollers can be replaced by either the QTIM or QLEN tape measuring rollers. The QTIM is supplied in the place of the take–up reel tension roller as standard equipment. QLEN instead of QTIM optional. (To be stated when ordering).

26. ERASE HEAD

This is a full track erase head. It means that it is not possible to record one channel on the IV–S while preserving the original recording on the other channel. This also includes the centre track whether Time Code or FM pilot.

27. STROBOSCOPE ROLLER

This roller comes in two versions: 50 Hz (CCIR machines) and 60 Hz (NAB machines). Using this roller, it is possible to check that the machine is running at the correct speed, either in record or playback. This works at all speeds and uses the stroboscopic effect whenever a mains powered lamp is shone upon it. When at the correct speed, the bars on the roller should appear stationary.

28. RECORDING HEAD

Two channel audio recording head.

29. TIME CODE / PILOT HEAD

Centre track head used for both recording and playback, of FM pilot, CUE and SMPTE / EBU time code, according to the type of machine.

30. PLAYBACK HEAD

Two channel audio playback head.

31. CAPSTAN SHAFT

Tape main drive.

32. PINCH WHEEL AND TAPE GUIDE CONTROL LEVER

This lever engages and disengages the tape from the heads and motor capstan shaft. It also moves the stroboscope roller and mobile tape guide in and out, to allow easy loading of the tape.

When it is in the open position, rapid rewinding is possible. (This lever should never be left in the open position for long periods of time as this may cause a "FLAT" on the capstan shaft "O" ring).

33. TAPE TENSION ROLLER (OR TIMER) (see 25)

34. TAKE–UP REEL (see 24)

35. EQUALIZATION ADJUSTMENT POINT (see Chapter II service manual)

POSITIONS 36 TO 49 SEE CONNECTORS (Pages I 1.5–1 to I.1.5-3)

50. KEYBOARD

This is the small slide–out control panel for the IV–S time code machines. It allows setting and modification of all time code functions (except frame rate). For further details see "TIME CODE AND PILOT" section IV of this manual.

51. LIQUID CRYSTAL DISPLAY

This is the display for time code, user bits and status of the IV–S TC (See"TIME CODE AND PILOT" section IV of this manual).

52. CONTROL KEYS

These eleven keys allow the operator to modify all time code functions except frame rate (see "TIME CODE AND PILOT"section IV of this manual).

1.5 CONNECTORS

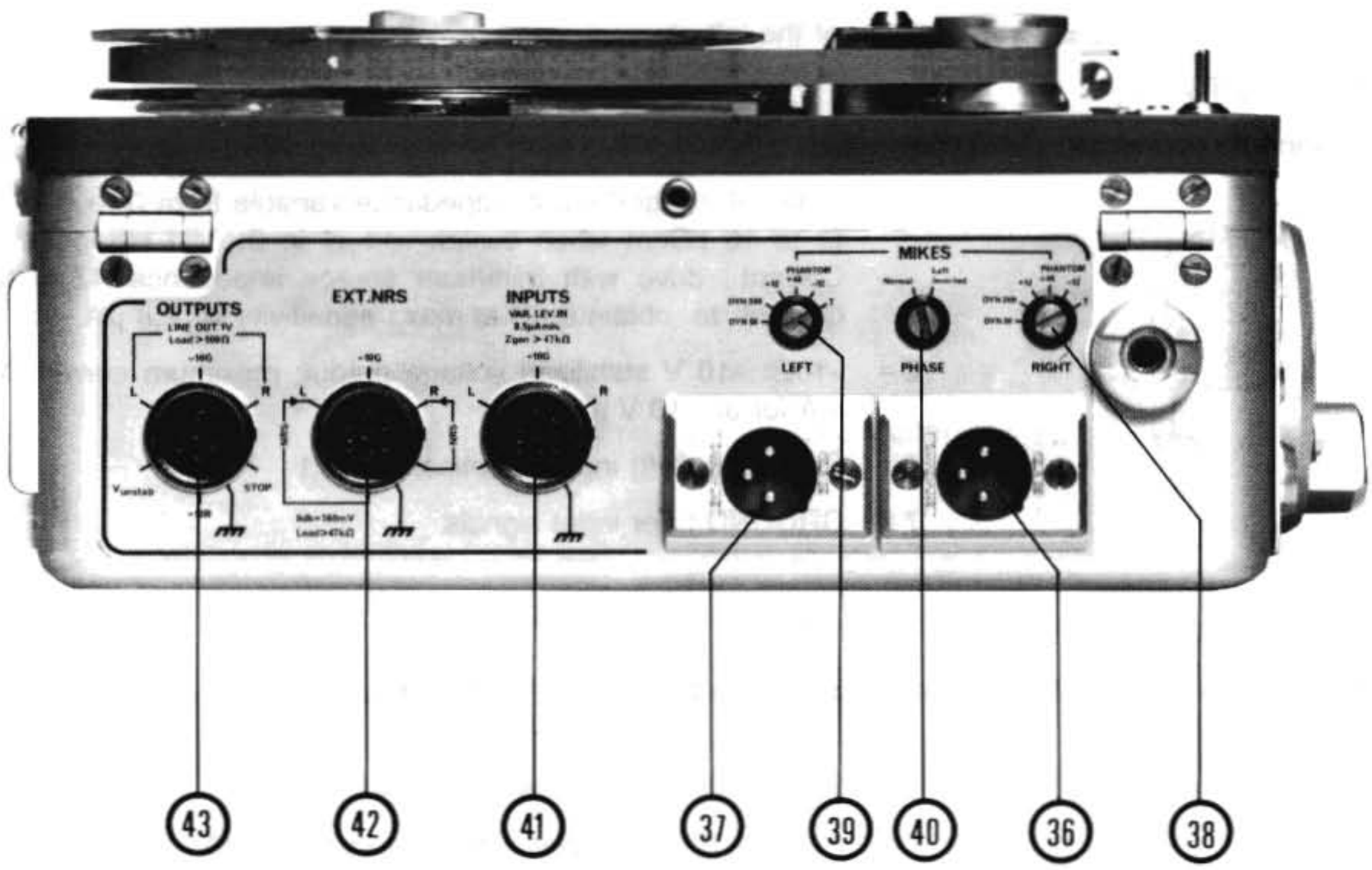

36. MIKES (RIGHT) (Channel 2)

CCIR **NAB**

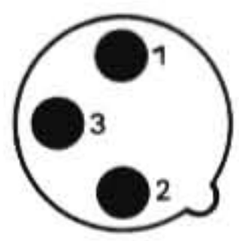

1 = Input signal Ground

2 + 3 = Balanced signal Input

37. MIKES (LEFT) (Channel 1)

Identical to No 36 above, but for the other channel.

38. SIX POSITION MICROPHONE TYPE SELECTOR, channel 2 (right)

DYN 50 = Dynamic microphone impedance 50 Ohm 0.1 mV / µbar (1mV/pa) sensitivity

DYN 200 = Dynamic microphone impedance 200 Ohm 0.2 mV / µbar (2mV/pa) sensitivity

+ 12 = Condenser microphone, 1 mV/µbar (10mV/pa) sensitivity + 12 V phantom powering

+ 48 = Condenser microphone, 1 mV/µbar (10mV/pa) sensitivity + 48 V phantom powering

– 12 = Condenser microphone, 1 mV/µbar (10mV/pa) sensitivity –12 V phantom powering

T = Condenser microphone, 1.5mV/µbar (15mV/pa) sensitivity + 12 V T powering
(Tonaderspeisung since 1984)

39. SIX POSITION MICROPHONE TYPE SELECTOR, channel 1 (left)
(Identical to No 38) except for the other channel.

40. MIKES PHASE: Phase inverter for channel 1 (left) mic input

This can be used to invert the phase of the left channel.

41. INPUTS

Line inputs connector. (Both channels)

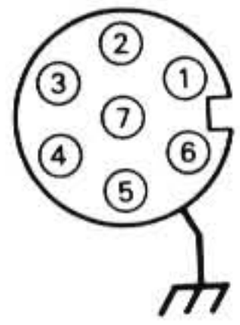

1 = Channel 2 (right) input: impedance variable from 0 to 5 kOhm (0 to 10 kOhm when switch 11 is in the ST.HS position). Current drive with minimum source impedance 47 kOhm. Current to obtain 0 dB at max. sensitivity is 7.8 µA.

2 = –10G: –10 V stabilized voltage output; maximum current 100 mA for all –10 V terminals

3 = Channel 1 (left) input. Identical to pin 1

7 = GROUND : For input signals

42. EXT. NRS

(External noise reduction system): Connection to external NRS. Output and input voltage 560 mV for 0 dB.

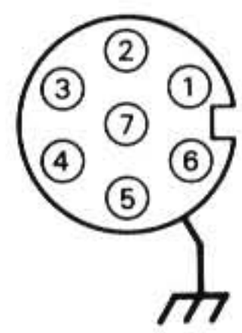

1 = EXT. NRS. output, channel 2 (right)

2 = –10G : –10V stabilized output. Imax = 100 mA

3 = EXT. NRS. output, channel 1 (left)

5 = EXT. NRS. input, channel 1 (left). Minimum impedance 47 kOhm

6 = EXT. NRS. input, channel 2 (right). Minimum impedance 47 kOhm

7 = GROUND : Ground for input signals

43. OUTPUTS

Line output connector.

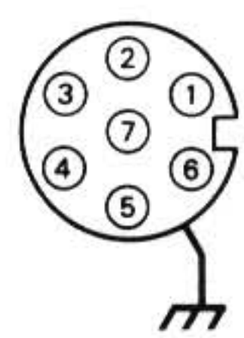

1 = Channel 2 (right) output: output voltage 1 V at 0 dB. Minimum impedance load 500 Ohm.

2 = –10G : –10 V stabilized voltage output. I max = 100 mA

3 = Channel 1 (left) output. Identical to pin 1

4 = V unstab: Unstabilized power supply voltage

5 = –10R stabilized voltage available in record only. I max = 100 mA

6 = STOP. Input for motor stop control. Connect to –10 V to stop the motor

7 = GROUND

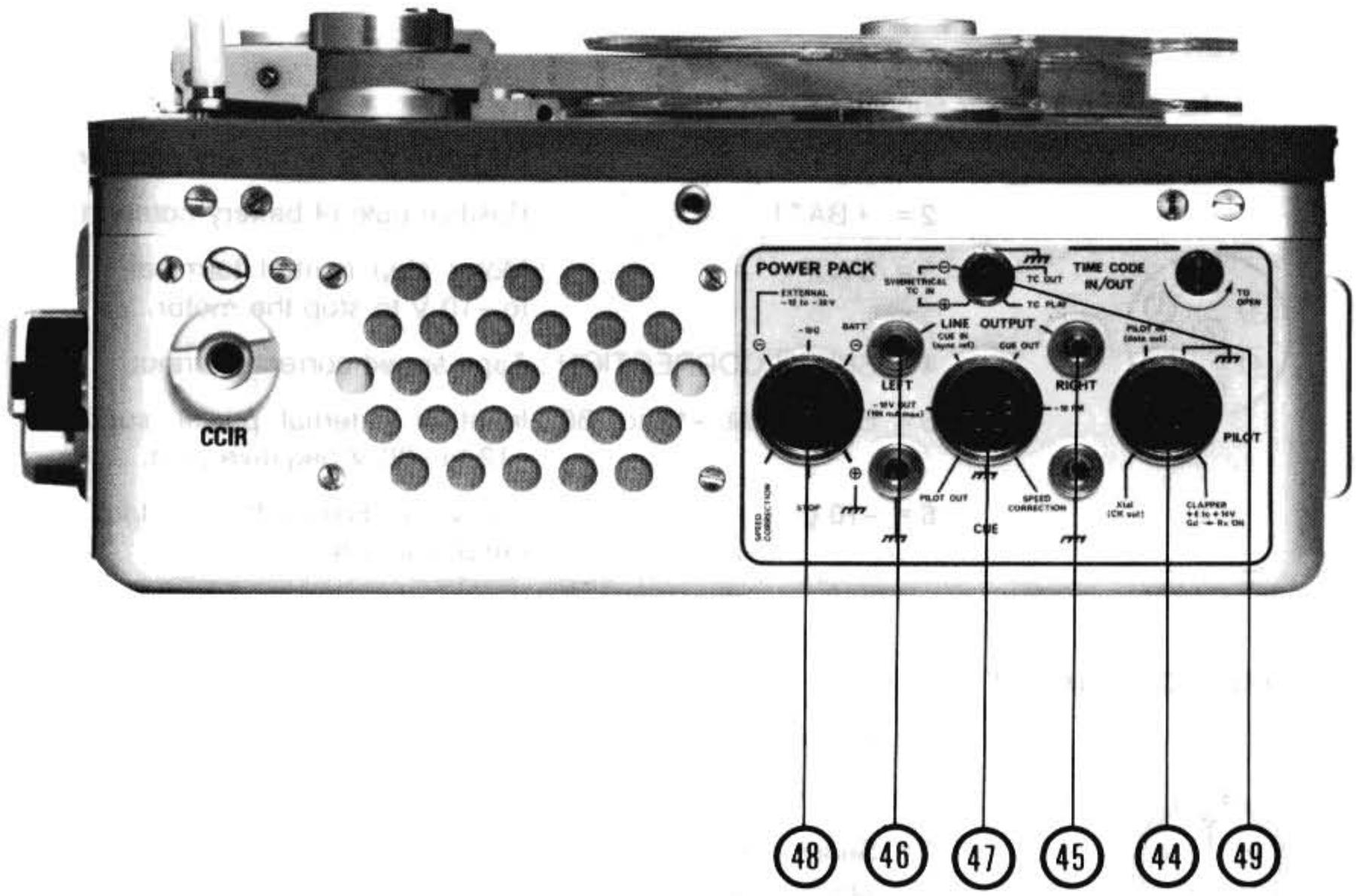

44. PILOT

Pilot signal input for pilot track.

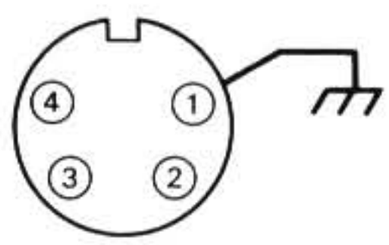

1 = GROUND

2 = Clapper : Reference oscillator or crystal pilot generator input

3 = X–TAL : 50 or 60 Hz internal generator output

4 = Pilot in : Pilot signal input

45. LINE OUTPUT (right) : Channel 2 (right) output on banana plugs.

46. LINE OUTPUT (left) : Channel 1 (left) output on banana plugs.

47. CUE

Connector for recording and playback of the pilot track:

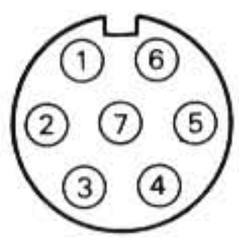

1 = Sync reference

2 = –10 V stabilized voltage output

3 = Pilot output

4 = Speed correction input

5 = –10 V FM connect to –10 V to activate modulator

6 = Cue output

7 = GROUND

48. POWER PACK

Connector for external power supply.

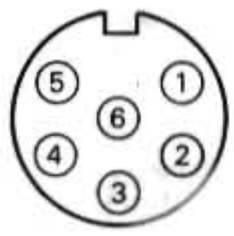

1 = – BATT	: Negative pole of battery compartment.
2 = + BATT	: Positive pole of battery compartment.
3 = STOP	: Motor stop control terminal. Connect to –10 V to stop the motor.
4 = SPEED CORRECTION	: Tape speed correction input.
5 = EXTERNAL –12 to –30	: Input for external power supply –12 to –30 V negative pole.
6 = –10 g	: –10 V stabilized voltage output, I max 100 mA

49. TIME CODE INPUT / OUTPUT

1 = GROUND

2 = Time code input

3 = Serial input / output (for use with AATON origin C master clock) if QSIA optional interface is fitted

4 = Time code play

5 = Time code output

1.6 TAPE SPEED AND STANDARD SELECTION

The NAGRA IV-S is capable of running at three different speeds which can be selected by changing the position of "SPEED AND STANDARD" selector (20) on the top plate of the recorder between the two spools.

The speeds available are :

3¾ips (9.525 cm/s)

7½ips (19.05 cm/s)

15ips (38.10 cm/s)

Each position of this selector automatically selects the correct equalization of the machine according to the chosen speed. There are two different positions available for 15 ips (38.1 cm/s) the first being normal equalization NAB or CCIR, the second being the special NAGRA MASTER position.

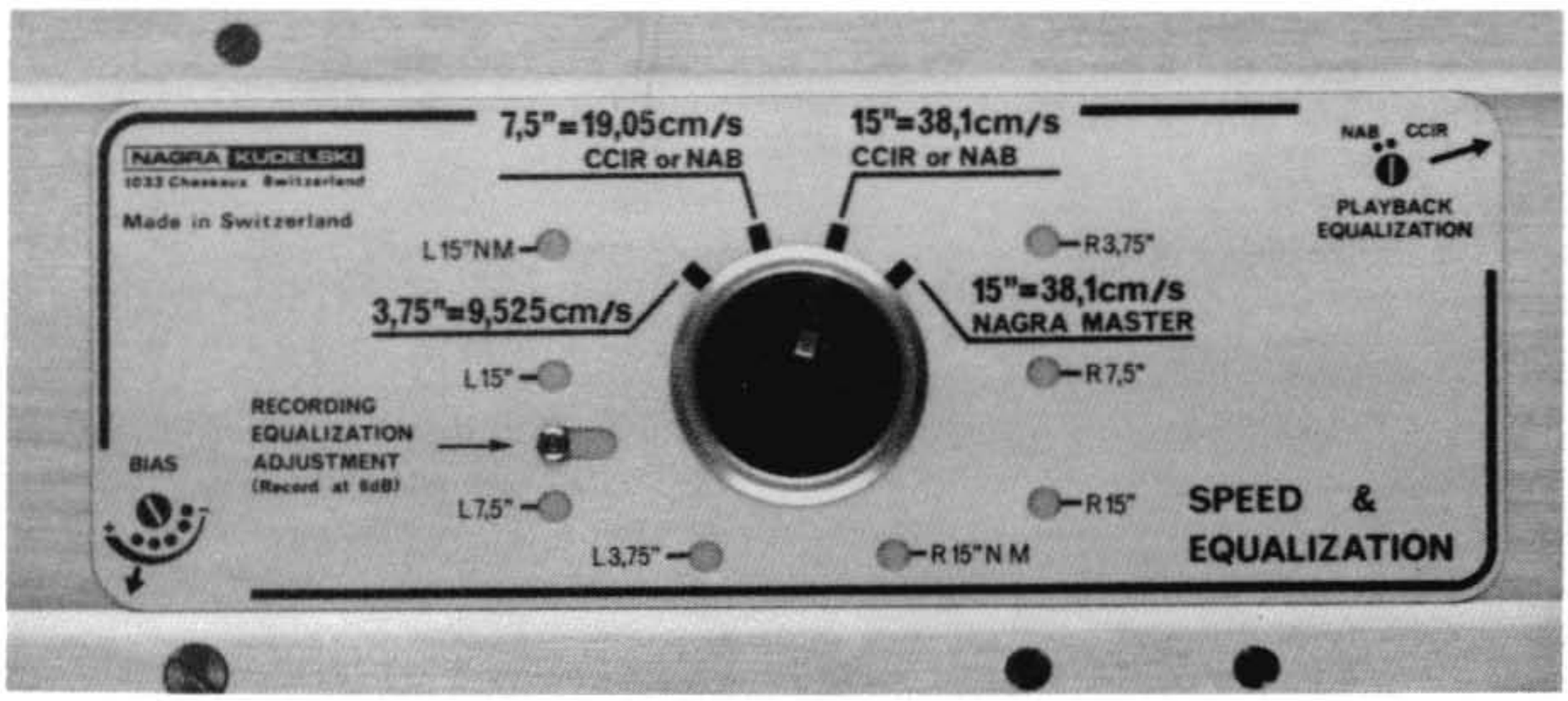

For adjustments of equalization and checking of tape speed refer to section III CALIBRATION of this manual. During playback the IV-S may also be switched between NAB and CCIR using switch (22) located in the right-hand rear corner of the deck.

NOTE: The NAGRA IV-S is only equipped with one recording bias oscillator and it is therefore only possible to bias the recorder for one specific tape type at any one time. However, it is possible to optimize the equalization at other speeds than the biased speed for different tapes.

1.7 LOADING A TAPE ON THE RECORDER

Select "STOP", then release the tape from the heads, guides and capstan shaft by pulling lever (32) forward, until it comes to a complete stop. Remove the spool retaining nuts and place a reel of tape on the left–hand turntable, with the loose end of the tape coming from the left–hand side of the spool. Pass the tape around the left–hand guide roller and across in front of the heads, and around the right–hand guide roller. Attach the end of the tape to the empty spool on the right–hand turntable. Replace the two spool retaining nuts, and close lever (32) until it reaches its original position, thus putting the tape into contact with the heads.

NOTE: It is important to lower the double head-shield before loading a tape, otherwise the tape may pass behind it, and thus not be in contact with any of the heads. When the tape has been loaded and lever (32) has been restored to its original position, the shield may be lifted in front of the heads.

1.8 FIRST TIME OPERATION

Main function selector switch (4) is on the front right–hand side of the recorder. It controls the mode of operation that the machine is in. By switching it to the "TEST" position all the circuits in the recorder are powered up but the motor is not.

Select "EXT" or "BATT" depending on the power available. It is now possible to check the supply to the machine by putting modulometer switch (12) to the "BATT" position as explained previously. After checking the power, put the modulometer switch back in the level position.

Using main function selector (4) the machine may be put into the "RECORD", "PLAYBACK" or "TEST" positions (for level checking etc.) depending on the desired mode.

To interrupt any mode on the machine, the main function selector should be put to the "STOP" position.

FAST FORWARD / REWIND

To rewind a tape put the main function selector in the "STOP" position, and open the pinch wheel gate by using operating lever (32) then select "TEST" and rewind the tape by means of toggle switch (23) located on the top left–hand front corner of the deck.

When the tape is fully rewound always place operating lever (32) back in the fully closed position (this will prevent a "flat" portion being made on the capstan "O" ring).

To wind a tape fast forward use switch (23) as for rewind. However, it is not necessary to open the pinch roller gate. The FAST FORWARD position of the toggle switch is only active when the main function selector is in the PLAYBACK (with loudspeaker) position. This is done to prevent accidental winding of the tape during RECORDING.

RECORDING

The NAGRA IV–S can make a recording using either microphones or a "DIRECT" line input signal.

RECORDING WITH MICROPHONES

When using microphones, connect a microphone to one or both of the two XLR type connectors on the left–hand side of the recorder. Check that the switches above each of the connectors are in the correct position corresponding to the type of microphone to be used. The possible selections are T–power, + 12 V and + 48 V phantom, powering 50 Ohm or 200 Ohm dynamic.

Set switch (9) to one of the two upper positions depending on which channels are to be recorded by microphone. The level of the signal coming from the microphones may now be observed by putting the machine into the "TEST" position and switching modulometer switch (12) to the "LEVEL" position. The gain may now be adjusted using potentiometers (6) and (7) on the front panel, which can either be adjusted seperately or together by moving the small plastic slider on the red control knob.

NOTE: The RED control corresponds to the left channel and the GREEN control corresponds to the right channel.

Turn the main function selector to either of the two RECORD positions, depending upon whether the limiter is required or not. Observe the modulometer to see that the levels remain correct throughout the recording.

Depending on the position of "LINE AND PHONES" switch (1) it is possible to monitor on the headphones output either the input signal, or the off tape signal during the recording. This is possible because the NAGRA IV-S is a three head machine. (Moving this switch will not affect the recording).

RECORDING A LINE SIGNAL

Set switch (9) to the "LINE" position and switch (10) to the "NORMAL" position. Feed line input connector (41) using a QCSE cable with the signal source to be recorded (minimum 0.5 V).

Set switch (11) to "STEREO" and switch (12) to "LEVEL". Turn the main function selector to "TEST" and adjust the levels using gain potentiometers (6) and (7). Finally switch the main function selector to one of the two "RECORD" positions to start the recording. When the recording is complete, select "STOP" then rewind the tape as previously described.

PLAYING BACK A RECORDED TAPE

Set main function selector (4) to one of the two possible "PLAYBACK" positions (either with, or without loudspeaker). The signal from the tape is now available on line output connector (43) or banana outputs (45) on the opposite side of the recorder. If line and phones switch (1) is in the "TAPE" position, then the signal is fed directly to the line outputs with no possibility of adjustment. However, if it is in the "DIRECT" position then each output may be adjusted with its corresponding control potentiometer.

The frequency response may also be modified using "FILTER" switch (13).

WORKING WITH HEADPHONES

If headphones are to be used, they can be plugged into the jack socket on the lower left-hand front side of the machine (17).

The level of the headphones may be adjusted using potentiometer (18). In record, the signals can be monitored either off tape or directly, depending on the position of the line and phones switch.

NOTE: When the machine is in the "TEST" position, the headphones output is always fed with the "DIRECT" signal.

The headphones output will accept a 1/4" stereo "JACK" connector (type 297) and can be used with headphones having an impedance from 25 Ohm to 600 Ohm. (Optimum value is 200 Ohm).

1.9 SPECIFICATIONS

The typical and maximum values stated below are defined as follows:

Typical value	:	Average value measured on 100 new recorders.
Maximum value	:	(shown in brackets) is the value above or below which a machine is rejected, when going through final inspection.

DIMENSIONS AND WEIGHT

Dimensions of the box alone with cover closed, without knobs, feet, handle or handle mounts:

= 12.6 x 8.8 x 4.4"
318 x 222 x 110 mm

overall dimensions except handle = 13.2 x 9.6 x 4.5 "
333 x 242 x 113 mm

Thickness of the box	= 0.08" or 2 mm
Thickness of tape deck	= 0.12" or 3 mm
Weight without batteries or tape	= 11.6 lbs or 5.25 kg
Weight with batteries and 5" tape	= 15 lbs or 6.4 kg

POWER SUPPLY

Power supply voltage necessary: D.C. (positive to chassis) –10.5 V to –30 V.

	non pilot	pilot	time code
power consumption			
"TEST"	100 mA	110 mA	140 mA
"LINE PLAYBACK"	175 mA	180 mA	200 mA
"LOUDSPEAKER PLAYBACK	230 mA	240 mA	250 mA
"RECORD"	250 mA	270 mA	270 mA
"RAPID REWIND"	280 mA	290 mA	300 mA
"STOP"	0 mA	0 mA	2.8 mA

Type of batteries: 12 x IEC standard R20 or ASA standard D or L90.

Approximate length of service when using regular dry cells:

4 hours in every 24 hours	:	10 hours
Continuous service	:	7 hours
Continuous service with high capacity cells	:	25 hours

MAGNETIC TAPE

Width of tape	1/4" (6.25 mm)
Admissible thickness	0.0005 to 0.002" (12–50 µm)
Maximum reel diameter (cover open)	7" (178 mm)
Recording time (7½ ips / 19 cm/s, 35 µm tape)	45 minutes
Maximum reel diameter (cover closed)	5" (127 mm)
Recording time (same conditions)	22 minutes
Rewind time (5" / 127 mm reels, 35 µm tape)	2 minutes

TAPE TRANSPORT

Switchable tape speeds:

15	ips =	38.10 cm/s	< 0.1%
7½	ips =	19.05 cm/s	< 0.1%
3¾	ips =	9.525 cm/s	< 0.1%

The stability of the average speed depends on temperature, the position of the recorder and the power supply voltage.

WOW AND FLUTTER

(Weighted p–p value according to DIN 45507 standard)

15	ips (38.10 cm/s)	± 0.05%	(0.07)
7½	ips (19.05 cm/s)	± 0.07%	(0.11)
3¾	ips (9.525 cm/s)	± 0.12%	(0.15)

(Weighted rms value according to NAB standards)

15	ips (38.10 cm/s)	0.028%
7½	ips (19.05 cm/s)	0.030%
3¾	ips (9.525 cm/s)	0.043%

STARTING TIME: < 3 SECONDS

AMPLIFIER CHAIN MICROPHONE INPUTS

Maximum sensitivity for 0 dB on the modulometer:

dynamic microphones 50 Ohm	0.1 mV / µbar	0.14 mV ± 10%
dynamic microphones 200 Ohm	0.2 mV / µbar	0.28 mV ± 10%
condenser microphones (phantom powering + 12 V, + 48 V and –12 V)	1.0 mV / µbar	1.40 mV ± 10%
condenser microphones T powering	1.5 mV / µbar	2.20 mV ± 10%

Distortion at 1 Khz in the condenser microphone position, T powering, input level 40 dB (420 mV) maximum sensitivity:

2 nd	harmonic	> 0.22 %	(0.3%)
3 rd	harmonic	> 0.05 %	(0.1%)

maximum input voltage for a distortion of 1 % at 1 kHz:

dynamic 200 Ohm	135 mV	(120 mV)
T– powering	1040 mV	(1000 mV)
+ 48 V phantom	655 mV	(600 mV)

Frequency response (output loaded with 5 kOhm) dynamic microphones:

50 Hz	0 dB	(–1.5 dB)
80–20 Hz	± 0.7 dB	(± 1 dB)

Signal-to-noise ratio of the microphone preamplifier when switched to dynamic, ASA A weighting, reference

1 mW 125 dBm (124 dBm)

Noise level of the condenser microphone preamplifier, input ASA A weighted
0.6 µV (0.8 µV).

LINE INPUTS

The input impedance is variable from 0 to 5 kOhm or from 0 to 10 kOhm in the ST.HS position of the stereo / mono switch; this is a current input.
Input current for 0 dB on the modulometer, maximum sensitivity 7.8 µA ±5%
Maximum input level for 1% distortion under the same conditions (23 µA)
Signal–to–noise ratio at maximum sensitivity 86 dB (80 dB).

MODULOMETER

The integration time for	–1 dB 10 ms ±20 %
Usable scale	–30 to +5 dB.
Frequency response	40 Hz to 20 kHz ±0.5 dB
Instrument class	1.5

CROSSTALK BETWEEN CHANNELS

0 dB on the modulometer	1 kHz	70 dB (65 dB)
	10 kHz	60 dB (50 dB)

Filters		Attenuation
FLAT	linear frequency response	
MUSIC	high pass filter	–3.0 dB at 40 Hz
M + LFA	music + low freq. attenuation	–7.0 dB at 40 Hz
		–3.0 dB at 400 Hz
SPEECH	high pass filter	–3.0 dB at 80 Hz
S + LFA 2	speech + low freq. attenuation	–7.5 dB at 80 Hz
		–3.0 dB at 400 Hz
ROLL OFF	strong low freq. attenuation	–10.0 dB at 100 Hz
		–3.0 dB at 400 Hz

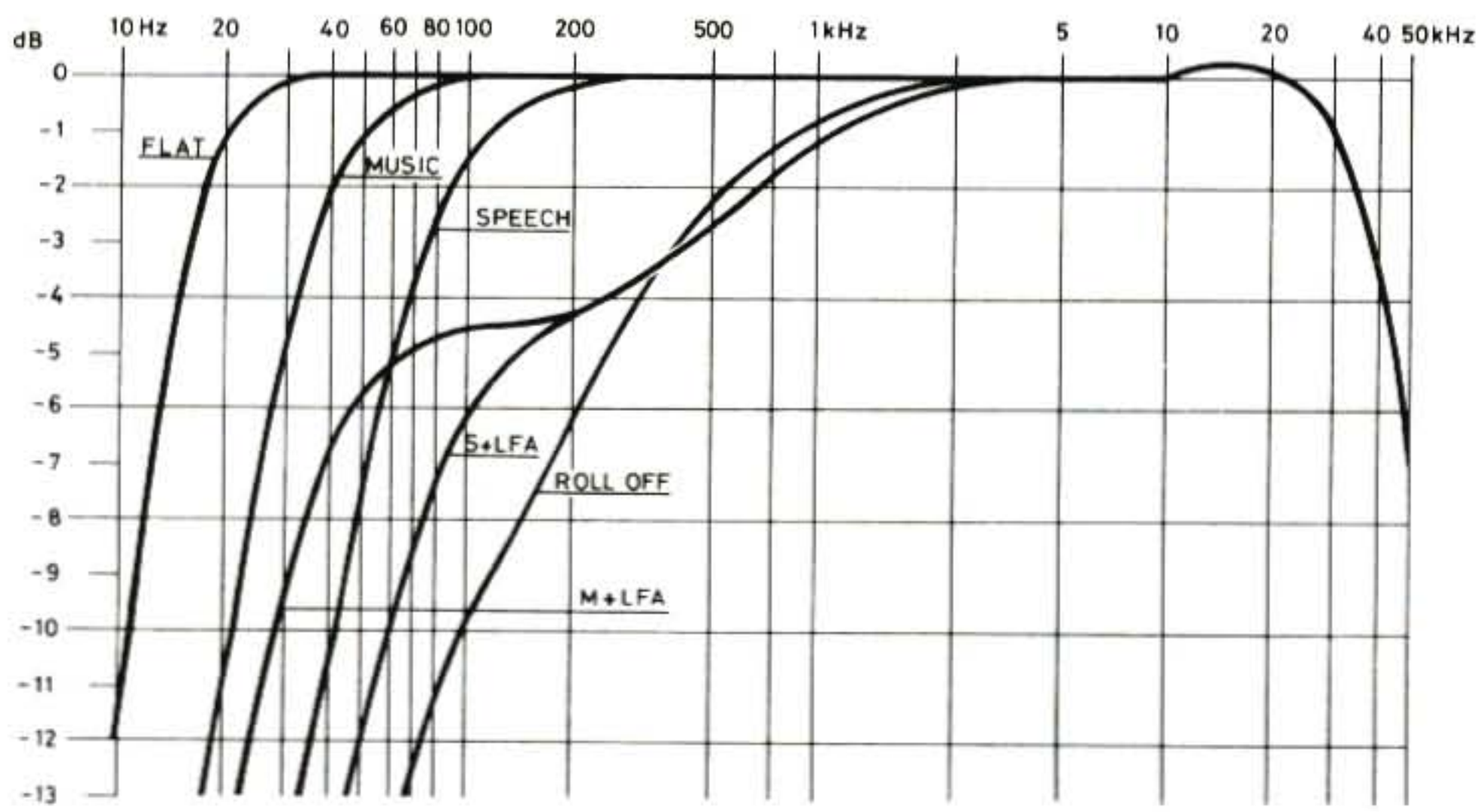

RECORDING AND PLAYBACK

Nominal recording level	0 dB = 510 nWb/m
Maximum peak recording level	+4 dB

The types of tape for which the machine is adjusted appear in the protocol of measurements, e.g.:

CCIR version	AGFA PEM 468	(15" and 7½")
	AGFA PEM 369	(3¾")
NAB version	SCOTCH 3M 808	(15", 7½", 3¾")
	SCOTCH 3M 226	(15" NAGRAMASTER)

Erase efficiency at maximum peak level 83 dB (80 dB)

Frequency response, recorded at –20 dB:

15 ips	(38.10 cm/s)	from 30 Hz	to 20 kHz	±1dB	(±2 dB)	
7½ ips	(19.05 cm/s)	from 30 Hz	to 15 kHz	±1dB	(±2 dB)	
3¾ ips	(9.5 cm/s)	from 30 Hz	to 10 kHz	±2dB	(±3 dB)	CCIR
3¾ ips	(9.5 cm/s)	from 30 Hz	to 8 kHz	±2dB	(±3 dB)	NAB

Distortion at maximum peak level, 15 ips STD 3rd harmonic 1% (2%).

Signal–to–noise ratio, record and playback, at maximum peak level:

15 ips (38 cm/s) NAGRAMASTER (13 µs)	NAB	74.5 dB (72 dB)
	CCIR	75 dB (72 dB)
15 ips (38 cm/s) STD	NAB	70.5 dB (68 dB)
	CCIR	71 dB (69 dB)
7½ ips (19 cm/s) STD	NAB	68 dB (65 dB)
	CCIR	69 dB (64 dB)

Non–pilot version (wide track)

Signal–to–noise ratio improved by approximately 1.5 dB

Phase fluctuation between channels 7½ ips (19.05 cm/s), 10 Khz ± 5° (±20°)

Cross talk during record and playback	1 Khz	60 dB	(50 dB)
	10 Khz	50 dB	(40 dB)

Insertion of a noise reduction system (NRS).

Low impedance output to NRS, voltage for 0 dB on the modulometer 560 mV.

Input for NRS, impedance approximately 10 kOhm, voltage for 0 dB on the modulometer 560 mV.

OUTPUTS

Line output voltage at 5 kOhm, for 0 dB on the modulometer 1 V.

Maximum output voltage for 5 kOhm, giving 1% distortion at 1 kHz V (2.8 V).

Maximum output voltage to 200 Ohm headphones, for 0 dB modulometer, at 1 kHz = 560 mV ±20 mV.

PILOT TRACK

Possible speeds	3¾ ips / 7½ ips / 15 ips.
Carrier frequency	13.5 kHz.
Static linearity	(2%).
Maximum frequency deviation delta f0	± 45% (± 40 %).
Frequency response at –3 dB	0 to 2.7 kHz (0 to 2.5 kHz).
Signal–to–noise ratio for 40 % frequency deviation	> 50 dB.
Input voltage for 20 % frequency deviation	Pilot input ± 1.4 V ± 5% Cue ± 1.0 V ± 5%

Distortion for 40 % frequency deviation at 400 Hz < 2%

REFERENCE GENERATOR

1.1 kHz composite sine wave signal with 10 kHz component, level 0 VU = –8 dB ± 0.2 dB.

OPPERATING CONDITIONS

Temperature:	with alkaline batteries	– 4°	to + 160°F
		– 20°	to + 71°C
	with external power supply	– 67°	to + 160°F
		– 55°	to + 71°C

The recorder functions in any position.

TIME CODE

TIME CODE SPECIFICATIONS see Chapter IV.

SERVICE MANUAL 2

CHAPTER II "SERVICE MANUAL"

TABLE OF CONTENTS

		Page No.
1.0	List of tools and materials	II 1.0–1 to 1.0–2
	Replacement:	
1.1	Motor and capstan assembly	II 1.1–1 to 1.1–3
1.2	Fast rewind pulley	II 1.2–1
1.3	Tension rollers and stroboscope roller	II 1.3–1
1.4	Pinch roller	II 1.4–1
1.5	Clutch felt and brake felt	II 1.5–1
1.6	Turntable bearings	II 1.6–1
1.7	Drive belts	II 1.7–1
1.8	Tape guides and heads	II 1.8–1
	Mechanical alignment:	
2.1	Head squaring and height	II 2.1–1
2.2	Tension roller height	II 2.2–1
2.3	Tape tension	II 2.3–1 to 2.3–2
2.4	Pinch roller pressure and position	II 2.4–1
2.5	**Mechanical drawings:**	II 2.5–1 to 2.5–19
	Nos.: 1 Tape deck and lid assembly	II 2.5–3
	2 Brake drum, brake and supply tension roller	II 2.5–5
	3 Clutch assembly and take–up roller	II 2.5–7
	4 Inner tape deck and heads	II 2.5–9
	5 Motor and capstan assembly	II 2.5–11
	6 Bell crank, mobile guide and stroboscope	II 2.5–13
	7 Pinch roller assembly	II 2.5–15
	8 Box	II 2.5–17
	9 Electrical connectors / switch	II 2.5–19
2.6	**Mechanical drawings and parts list:**	II 2.6–1 to 2.6–7
	M1–S Tape deck assembly	II 2.6–2 to 2.6–3
	M2–S Tape deck assembly	II 2.6–4 to 2.6–5
	M3–S Box and control assembly	II 2.6–6 to 2.6–7

1.0 LIST OF TOOLS AND MATERIALS
SPECIAL KUDELSKI TOOLS

KUDELSKI P/N	DESCRIPTION
01 90 900 002	Wrench for reel turntable, No 07 04 125 000 (part No 2 on drawing 3) and No 07 04 150 000 (part No 2 on drawing 4)
01 90 900 003	Wrench for clutch pulley spindle, No 71 04 168 100 (part No 10 on drawing 4)
01 90 900 004	Wrench for ball bearing housing in tape turntable assembly, No 01 04 110 102 (part No 5 on drawing 3)
01 90 900 005	Wrench for ball bearing housing fixing nut in tape turntable assembly, No 01 04 110 005 (part No 6 on drawing 3)
01 90 900 006	Wrench for ball bearing lock nut in tape turntable assembly, No 01 04 110 006 (part No 7 on drawing 3)
01 90 900 025	Wrench for handle support nut, No 01 04 500 005 (part No 30 on drawing 9)
01 90 900 026	Wrench for rotating indicator fixing nut, No 01 06 540 003 (part No 15 on drawing 10) and for female socket fixing nuts, No 01 04 500 012 (part No 29 on drawing 9 and part No 31 on drawing 10)
01 90 900 027	Wrench for rotary selector ring fixing nut, No 01 06 510 016 (part No 23 on drawing 10) **Note:** Level, Filters and Headphones selectors.
01 90 900 031	Driver for motor shaft locking nut, No 01 04 250 102 (part No 20 on drawing 6)
01 90 900 037	Hex driver for LIGHT and REFERENCE OSCILLATOR push button fixing nuts, No 32 05 006 165 (part No 87 on drawing 10)
01 90 900 042	Wrench for head azimuth adjustment
01 90 900 046	Gauge for head squaring adjustment
01 90 900 064	Pliers for circlip No 33 53 013 044, in pinch wheel (part No 24 on drawing 8) and in fast rewind pulley
01 90 900 072	Driving tool for motor magnet, inside motor rotor
01 90 950 009	Magnetic shielding cylinder for motor rotor with magnet
01 90 901 036	Weight of 23 g, for clutch side tension roller position adjustment. To be used with standard tension roller
01 90 901 037	Weight of 30 g, for clutch side tension roller position adjustment. To be used with QTIM or QLEN measuring tension rollers.

SELECTED STANDARD TOOLS

25 90 900 078	Set of selected standard tools (see Spare Parts List for details)
25 90 900 079	Set of four right angle Allen hex wrenches, size: 1.5, 2.0, 2.5 and 3.0 mm
39 15 371 010	Pliers for Benzing circlips
39 15 560 010	Calibrated spring (dynamometer), range 100 g
39 15 560 150	Calibrated spring (dynamometer), range 1.5 kg

MATERIALS

39 80 210 222	Loctite 222, weak glue for threaded parts, 50 cm^3
71 04 056 000	FGP general purpose grease supplied in a tube of 25 g
71 04 058 000	PDP 38 low viscosity, wide temperature range oil, 50 cm^3

REPLACEMENT

1.1 MOTOR AND CAPSTAN ASSEMBLY

(See mechanical drawing no 5)

Open the machine by slightly loosening the two screws on the right–hand side of the machine. Do not fully remove the screws. Lift the deck to the left. Place the machine on its lid with the box upwards to the right–hand side.

Remove the μ–metal motor cover carefully ensuring not to distort (bend) it, as this will affect the magnetic shielding properties of the cover.

Unsolder the red and screened wires soldered to the motor contact circuit, noting their position as this is a D.C. motor and the position of these wires determines the rotational direction of the motor. Partially unwrap the adhesive tape enough to free the connector wires, being careful not to move the position of the brush housing. Replace the tape to prevent movement of the motor brush housing.

Remove locking ring (20), using KSA tool No 01 90 900 031. It is necessary to hold the tachometric wheel with a finger during this operation. Remove threaded pin No (19) using a 2 mm Allen key while holding the tachometric wheel.

Remove nuts **A, B** and **C** around the base of the motor (see figure below) using a 5.5 mm hex wrench.

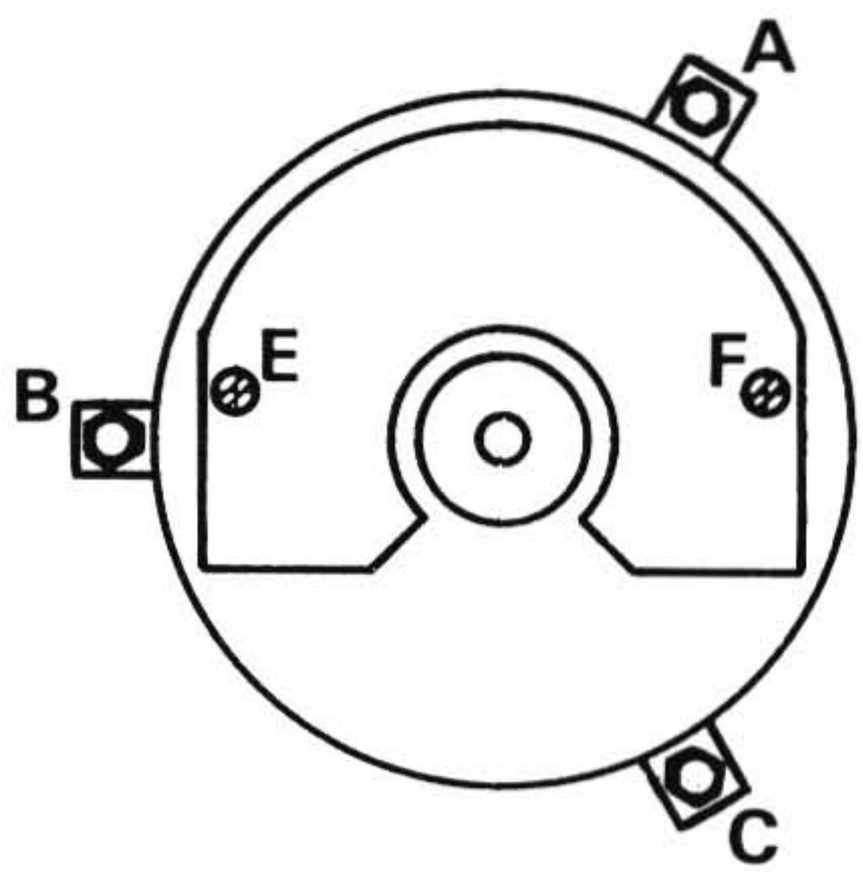

Gently remove the complete motor. Carefully look at the spindle to see if collar No (13) has been removed with the motor. If this is the case, then remove it from inside the motor using a pair of tweezers and noting its orientation, as the motor will jam if replaced incorrectly during re-assembly.

BEARING REPLACEMENT

(See mechanical drawing No 5)

Partially remove the black tape and mark with a felt pen both halves of the motor housing so that correct positioning of the brush housing can be obtained during reconstruction. When this is done, fully remove the tape.

Now remove gold screws (E) and (F) (see drawing on page II 1.1–1) which hold the brushes in place and carefully slide the brushes backwards to prevent damage to their surfaces.

NOTE: Do not completely remove the brushes (unless replacement is necessary) as they will be worn to match the commutator, and must be replaced in their original position.

Now carefully remove the brush housing to expose the rotor. Gently rotate the motor until the hole in the windings is lined up with the hole in the permanent magnet inside the motor.

Insert KSA special tool No 01 90 900 072 into the motor rotor with the larger diameter spike through the center of the motor, and the thinner spike through the hole in the windings by rotating it gently until the smaller spike finds the gap within the rotor, and press it gently until it falls into the hole provided. Now rotate it CLOCKWISE to unscrew the rotor. When this is done, remove the tool, leaving the rotor in its housing. Place magnetic shield No 01 90 950 009 over the top of the rotor and invert both.

NOTE: Never remove the rotor without its shield as its magnetic properties will be lost and the motor rotor will then need replacing.

Keeping the rotor upside down, remove dust hield (17) using tweezers. Remove the ball bearing and replace it if necessary. Reinstall dust shield (17) respecting its original orientation.

Reassemble the motor inversely with reference to the above description.

NOTE: When reinstalling special screw, (19), it is necessary to gently lift the tachometric wheel to prevent damage to the screw thread when taking up the play in the capstan.

CAPSTAN ASSEMBLY

(See mechanical drawing No 5)

Remove the capstan top bearing and its steel ball by unscrewing grub screw (31) and lifting up the top bearing. Carefully remove the steel ball with tweezers.

Open the machine as above and remove the motor shield. Remove parts (19) and (20) as explained above. Using a 7 mm hex wrench remove the four motor support plate mounting nuts (14). Gently lift the motor complete with its mounting plate until it is free of the spindle, then remove the spring connected to the fast rewind pulley, being careful to remove collar (13) as described above.

Remove the drive belt from the capstan shaft and remove the capstan shaft assembly.

When refitting the capstan shaft assembly, gently push the fast rewind pulley towards the capstan until the capstan falls correctly into place.

Then continue as described above but in the reverse manner for complete reconstruction.

1.2 FAST REWIND PULLEY

(See mechanical drawing No 4)

Remove the motor, motor plate and capstan shaft assembly as described under "Capstan assembly" on page II 1.1–3.

Remove the rewind pulley and its drive belt. Be careful not to lose the white Nylon washer fitted under this pulley on machines manufactured up to October 1982, and remove the washer when fitting the new type pulley. It is now possible to disassemble the rewind pulley if it is necessary to change the bearings or drive belt. This is effected by undoing the central spindle.

For reinstalling the pulley proceed in the reverse order of the above.

1.3 TENSION ROLLERS AND STROBOSCOPE ROLLER

(See mechanical drawings No 2, 3 and 6)

To disassemble the supply reel tension roller remove bias oscillator circuit (A9) and loosen nut (29) on drawing 2 with a 2.5 mm Allen key and remove the tension roller from the deck. The other tension roller can be undone in the same way. If there is play in the shaft of the roller, then remove the central bearings by undoing the 3 screws (32) (drawing No. 2). Clean all parts thoroughly and lubricate with a drop of PDP-38 oil (KSA part No 71 04 058 000) and reassemble the roller. Adjust the amount of vertical play so that it is just detectable making sure that the pulley spins freely. Tighten the 3 screws (32) completely and refit the tension roller to the machine.

To disassemble the stroboscope roller remove bias oscillator circuit A9, then remove the 3 circlips (41) on drawing 6 and the two spring washers (40) observing their orientation. Then remove positioning piece (13) and remove the roller with its base from the machine. If necessary, disassemble the roller as described for tension rollers.

Refit the roller to the machine checking that washer (12A) (KSA part No 01 04 260 042) is fitted on the roller base, slightly grease the surface of the washer that is in contact with the deck plate using FGP grease (KSA part No 71 04 056 000). Insert a small piece of card (approximately 0.15 mm), which has a small slot cut in it, between the roller and its base and replace positioning piece (13) and the two spring washers, as shown in the mechanical drawing. Refit the first of the three circlips so as to ensure that when operating pinch wheel lever arm (32) mobile guide (10) moves in towards the erase head before the stroboscope roller. When this is the case, refit the other two circlips ensuring that these conditions remain. Refit the bias oscillator circuit.

1.4 PINCH ROLLER

(See mechanical drawing No 7)

In order to remove the pinch roller, remove screw (4) and then slide the pinch roller completely out of support (1) being careful not to lose the two spacers (21).

To replace the bearing remove circlip (24) using KSA tool No 01 90 900 064.

Now remove spring spacer (25) followed by the ball bearing and finally spacer (23). Replace the necessary parts and reinstall in reverse order. When refitting the pinch wheel into the support, slide the pinch wheel into place on a piece of card, taking care not to lose the two spacers and then replace spindle screw (4).

1.5 CLUTCH FELT AND BRAKE FELT

A. CLUTCH FELT

(See mechanical drawing No 3)

Open the deck as explained on page II 1.1–1. Place the machine on its lid and start by disengaging the tension roller arm where it connects to lever (14). Remove the 2 mm ruby ball (32). Remove circlip (43) and then loosen screw (38) and remove shaft (14) completely. Remove clutch pulley (12) complete with clutch felt which may now be changed. Thoroughly clean all surfaces of the clutch assembly using ethyl alcohol and remove any excessive grease from the new felt (11). Rebuild the clutch assembly in the reverse order of the above and refer to the mechanical alignment section of this manual for alignment (page II 2.3–1).

B. BRAKE FELT

(See mechanical drawing No 2)

Open the deck as explained on page II 1.1–1. Remove bias oscillator A9 and remove the drive belt from the brake drum. Disconnect the tension roller arm from brake bracket (10). Remove circlip (10A). Open the pinch wheel lever to free the brake arm and remove it. Change felt (36). Clean the brake drum and rebuild in reverse procedure. Refer to the mechanical alignment section of this manual for alignment (page II 2.3–2).

1.6 TURNTABLE BEARINGS

A. CLUTCH SIDE

(See mechanical drawing No 3)

Disassemble the clutch assembly as explained on page II 1.51, using KSA tools Nos. 01 90 900 002 and 01 90 900 003.

Undo the clutch spindle.

NOTE : This is a right–hand thread (clockwise).

Remove from the deck side ball bearing (31) and the two spacers (3) and (4) and also the two spring washers (39) observing their orientation.
Now remove dust shield (9) using KSA tool No. 01 90 900 006 and remove (replace) the second ball bearing (31).
If it is necessary to remove bearing housing (5), use KSA tools Nos. 01 90 900 004 and 01 90 900 005.

Replace the bearings and rebuild the clutch assembly as above, while respecting the orientation of clutch support bracket (7).

B. BRAKE SIDE

(See mechanical drawing No 2)

Proceed in the same way as for the clutch side, but only using KSA tool No. 01 90 900 002.

NOTE: This is a left–hand thread (counterclockwise).

When reinstalling the brake drum, be careful not to damage brake felt (36).

1.7 DRIVE BELTS

(See mechanical drawings Nos 3 and 4)

Remove the motor plate and the motor as explained earlier. Remove rapid rewind pulley (32) (drawing No 4). The supply reel belt may now be removed and replaced.

For the clutch side, in addition to removing the motor plate and motor, it is also necessary to disassemble the clutch assembly as previously explained.

1.8 TAPE GUIDES AND HEADS

A. FIXED GUIDES

(See mechanical drawing No 4)

The two fixed guides (9) located on either side of the heads can be removed simply by unscrewing central screw (8). When replacing the guide, ensure that the centre of the curved surface of the guide is perpendicular to the tape surface.

B. MOBILE GUIDE

(See mechanical drawing No 6)

Remove the bias oscillator board and remove circlip (39) to free the mobile guide being careful not to lose any of the parts as this is a spring loaded fixture. After replacing the mobile guide, ensure that when moving the pinch wheel operating lever, the stroboscope roller moves towards the heads after the mobile guide. If not, refer to stroboscope roller assembly in this manual (page II 1.3–1).

HEADS

(See mechanical drawing No 4)

All three heads are mechanically mounted in the same manner. Therefore, to replace anyone of them it is first necessary to loosen screw (41) and disengage cylinder (3) from the back of the respective head. Place a 2.5 mm Allen key in the non toothed socket in front of the relevant head and turn it counter clockwise until the head is completely free. When reinstalling any of the heads, turn this hex drive until the head is completely tight and then loosen it again by 1/4 of a turn.

When the head has been replaced, refer to the Mechanical alignment section of this Manual (page II 2.1–1) for the alignment, and to the Electronic calibration section for electrical adjustment.

MECHANICAL ALIGNMENT

GENERAL CHECKS

Before proceeding with any mechanical adjustment it is important to first make sure that all screws are corectly tightened and that any damaged or worn parts of the tape transport are replaced.

2.1 HEAD SQUARING AND HEIGHT

(See mechanical drawing No 4)

Loosen screw (41) and fit head squaring gauge No 01 90 900 046 over the relevant head. Adjust cylinder (3) using a 4.0 mm spanner so that the front edge of the head is exactly parallel to the gauge. The best way of doing this is to shine a light onto the gauge from the side and observe the gap from the opposite side. When the alignment is completed, retighten screw (41) and check the alignment. Repeat if necessary. Now place a tape on the machine and check that the height of the recording and the replay heads is correct. For the recording head this is such that the black pole pieces of each channel are just visible equally above and below the tape. For the replay head neither pole face should be visible. If this is not the case, then the height can be adjusted by changing the azimuth disc (10). To do this, the head must be removed, and the azimuth disc replaced. This must be followed by full mechanical alignment.

Azimuth discs for record and replay heads:

Part No	Thickness
01 04 255 013	0.9 mm
01 04 255 012	1.0 mm (most common thickness)
01 04 255 008	1.1 mm
01 04 255 009	1.2 mm
01 04 255 010	1.3 mm

NOTE: The disc located below the time code / pilot head is not of the same mechanical design as the other two, so be sure not to mix them up.

For time code and pilot head height adjustment refer to the Elecronic calibration section of this manual.

2.2 TENSION ROLLR HEIGHT

(See mechanical drawings Nos 2 and 3)

Place a reel of tape on the machine, playback at 15 ips (38 cm/s) and observe the tape on the take–up reel. Adjust the height of the right tension roller by loosening screw (35) (drawing No 3) so that the tape lies evenly between both edges of the spool. Rewind the tape and observe how the tape is wrapped onto the supply reel and, if necessary, adjust the left hand tension roller in the same manner, using screw no (29) (drawing No 2).

2.3 TAPE TENSION

A. TAKE–UP TENSION

(See mechanical drawing No 3)

Disconnect tension rod (17) from lever (14) and immediately remove the 2 mm ball (32). Fit a full 5" (127 mm) reel of tape to the take–up reel holder and pass the tape round the tension roller with the deck in a vertical position. Attach a weight to the end of the tape while holding the reel still (see figure 1 below).

NOTE: Normally 23 g weight P/N 01 90 901 036, or 30 g weight P/N 01 90 901 037 for QTIM or QLEN.

Adjust screw thread (19) to increase or decrease the tension of spring (30) in such a way that the tension roller lies in the center of its travel. This can be seen easily by the two screw heads visible on the deck. Tap the roller a few times to check that it returns to the correct position. Remove the weight.

Adjust nut (16) so that approximately three turns of the thread of screw (13) are visible. Now reinstall the ball and reconnect the tension arm. Adjust the tension rod length by rotating simultaneously screw (13) and nut (16) in such a way that when the tension roller is moved fractionally from its end stop, the tension arm just starts to act on lever (14).

Power up the machine and switch the main function selector switch to playback. With a full tape still on the take–up reel holder hold the open end of the tape around the tension roller and check that the tension roller is in the middle of its travel (see figure 2 below).

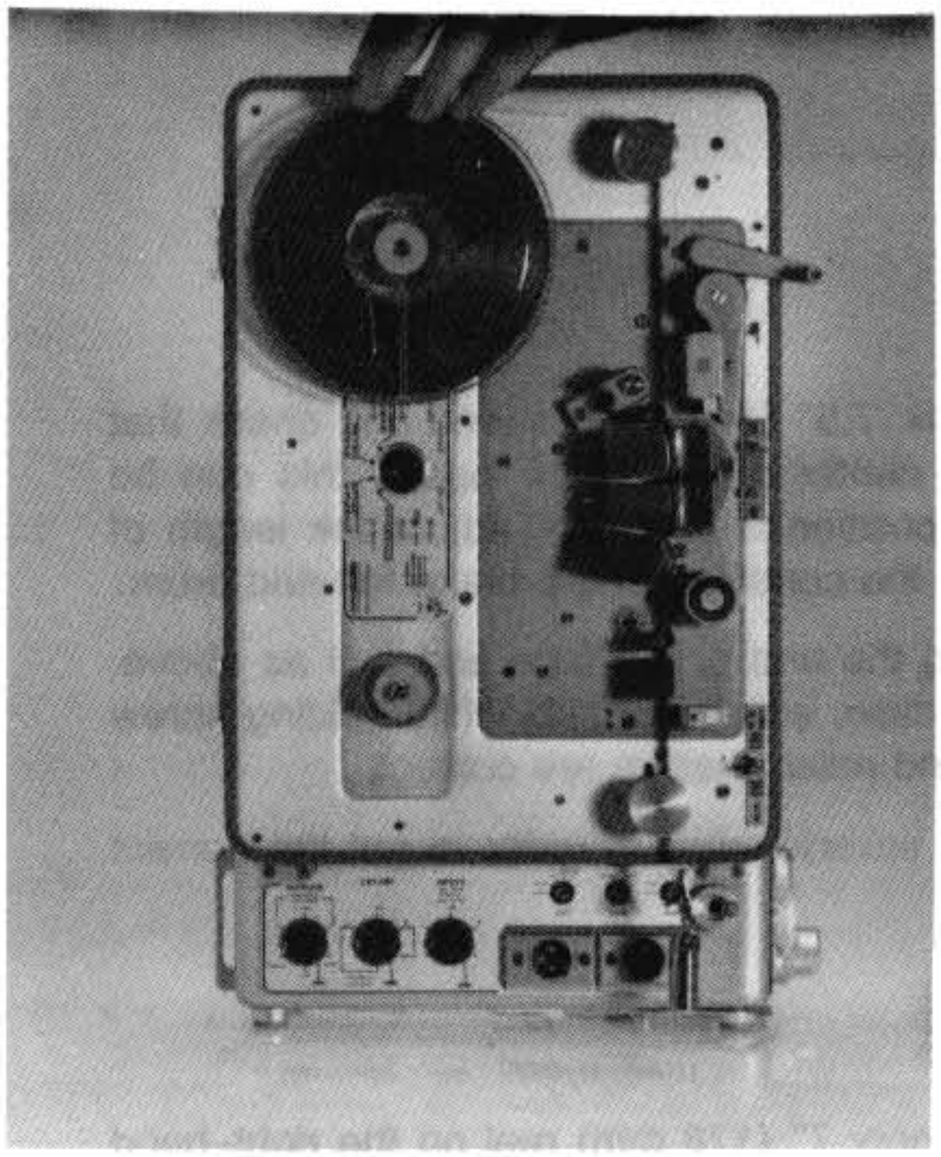

Fig.1

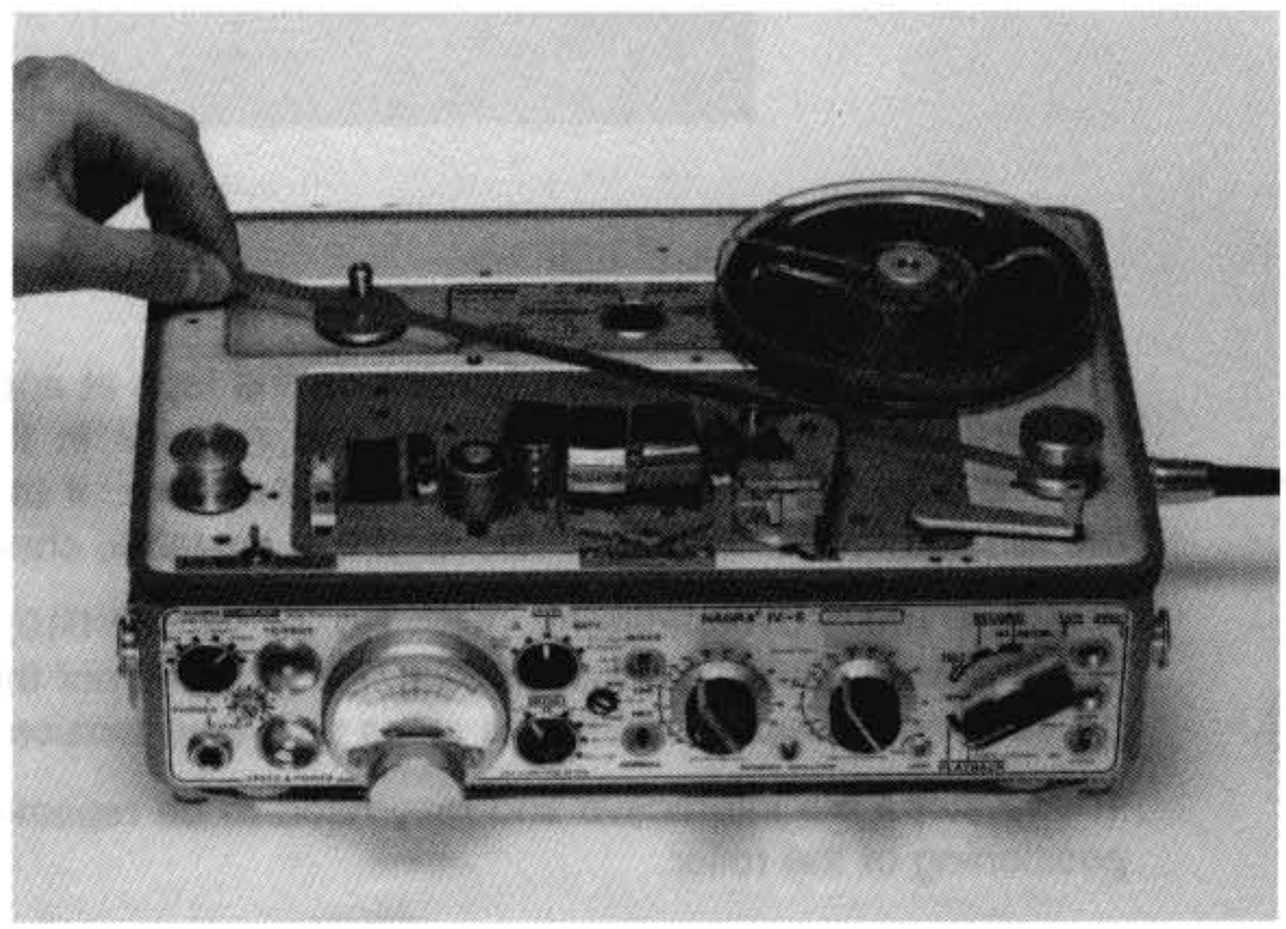

Fig.2

If it is not in the centre of its travel, adjust the tension roller rod length as before, and if it is not stationary, check that clutch felt (11) is not overgreased or that other parts of the clutch assembly are not deformed.

Attach a 100 g dynamometer (KSA No 39 15 560 010) to the end of the tape not passing around the tension roller and select playback. This gauge should now read 40 g ±2 g. If this is not the case, adjust nut (16) while holding still screw (13). When the correct tension is achieved, repeat the tension roller position adjustments as above. These two steps are interactive and may need to be repeated several times.

B. SUPPLY TENSION

(See mechanical drawing No 2)

Adjust thread (14) so that spring attachment (15) is next to the tension roller. Adjust screw (9) and nut (12) in the same way as explained for the take–up side.

Place a full 5" (127 mm) reel on the supply turntable and pass it around the roller, the guide and the stroboscope roller as shown on figure below :

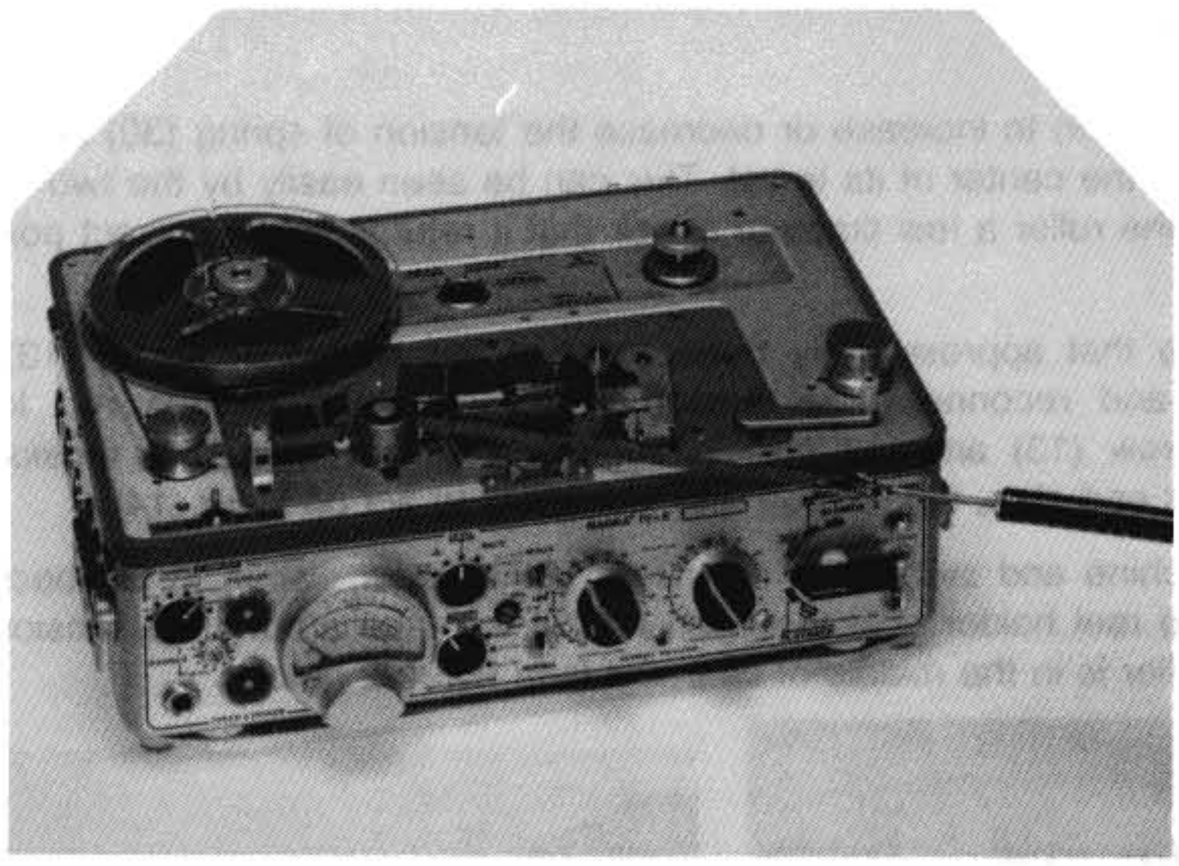

Pull smoothly with a constant tension on the tape at approx. 7.5" (190 mm) speed and check that the tension roller does not oscillate and remains in the center of its travel. Again, this can be observed by the two screws visible on the deck. If the position is incorrect, adjust the length of the tension rod as explained above. If it is unstable, check the condition of the brake felt and drum.

Attach a 100 g dynamometer (KSA No 39 15 560 010) to the end of the tape and pull as above. The tension should be equal to 55 g ±2 g. If it is not the case, adjust nut (12) while holding screw (9) stationary. Repeat the above steps until tape tension and roller position are correct.

These steps are interactive and may need to be repeated several times in order to get the correct positioning of the roller.

FINAL CHECK

Fit a full 7" (178 mm) reel on the left–hand side and an empty 7" (178 mm) reel on the right–hand side and lace the tape. Wind the tape in fast forward until there is an even amount of tape on both spools. Select playback at 7.5" (190 mm) and ensure that both tension rollers are in their central position and stable. If not, repeat the above adjustments. Secure the adjustment points mentioned above using a small amount of soft Locktite 222 (KSA No 39 80 210 222).

2.4 PINCH ROLLER PRESSURE AND POSITION

A. PINCH ROLLER PRESSURE

(See mechanical drawing No 7)

Playback a tape at 7.5 ips (19 cm/s) and attach a 1.5 kg dynamometer (KSA No 39 15 560 150) fitted with a small tag around screw head (4) of the pinch roller and pull at 90 degrees away from the capstan until the tape stops moving. The value at which this occurs should be 1000 ± 100 g. If this is not the case, adjust screw (18).

NOTE: Be careful while loosening this screw: if it is completely removed, the entire assembly must be removed in order to be refitted.

B. PINCH ROLLER POSITION

(See mechanical drawing No 1)

Adjust the length of rod (36) under the deck in such a way that when the deck is closed, and the main selector is in TEST or STOP, there is a gap of approximately 1 mm between the capstan and the pinch roller. Equally, when the machine is in RECORD or PLAYBACK, there must be a small gap between lever (33) and pinch wheel support (1) (drawing No 7). Optimize these two adjustments and check that when switching from RECORD to TEST the tape stops quickly.

STROBOSCOPE ADJUSTMENT

(See mechanical drawings Nos 4 & 6)

The stroboscope roller has no specific adjustment, however it is adviseable to check the position of this roller. This should be such that when the pinch wheel operating lever is in the fully closed position, the stroboscope roller is at the end of its travel. If necessary, this can be adjusted using eccentric pinion (14) (drawing No 6) on bell crank (1). When this adjustment is correct, there should be no horizontal movement of the roller, and the distance between the roller and the record head should be of approximately 1 mm. This distance is adjustable by means of stop washer (23) (drawing No 4). Nut (58) is to be loosened and eccentric pinion (14) (drawing No 6) readjusted as explained above.

2.5 MECHANICAL DRAWINGS

Numbers

1 TAPE DECK AND LID ASSEMBLY
2 BRAKE DRUM, BRAKE AND SUPPLY TENSION ROLLER
3 CLUTCH ASSEMBLY AND TAKE-UP ROLLER
4 INNER TAPE DECK AND HEADS
5 MOTOR AND CAPSTAN ASSEMBLY
6 BELL CRANK, MOBILE GUIDE AND STROBOSCOPE
7 PINCH ROLLER ASSEMBLY
8 BOX
9 ELECTRICAL CONNECTORS / SWITCHES

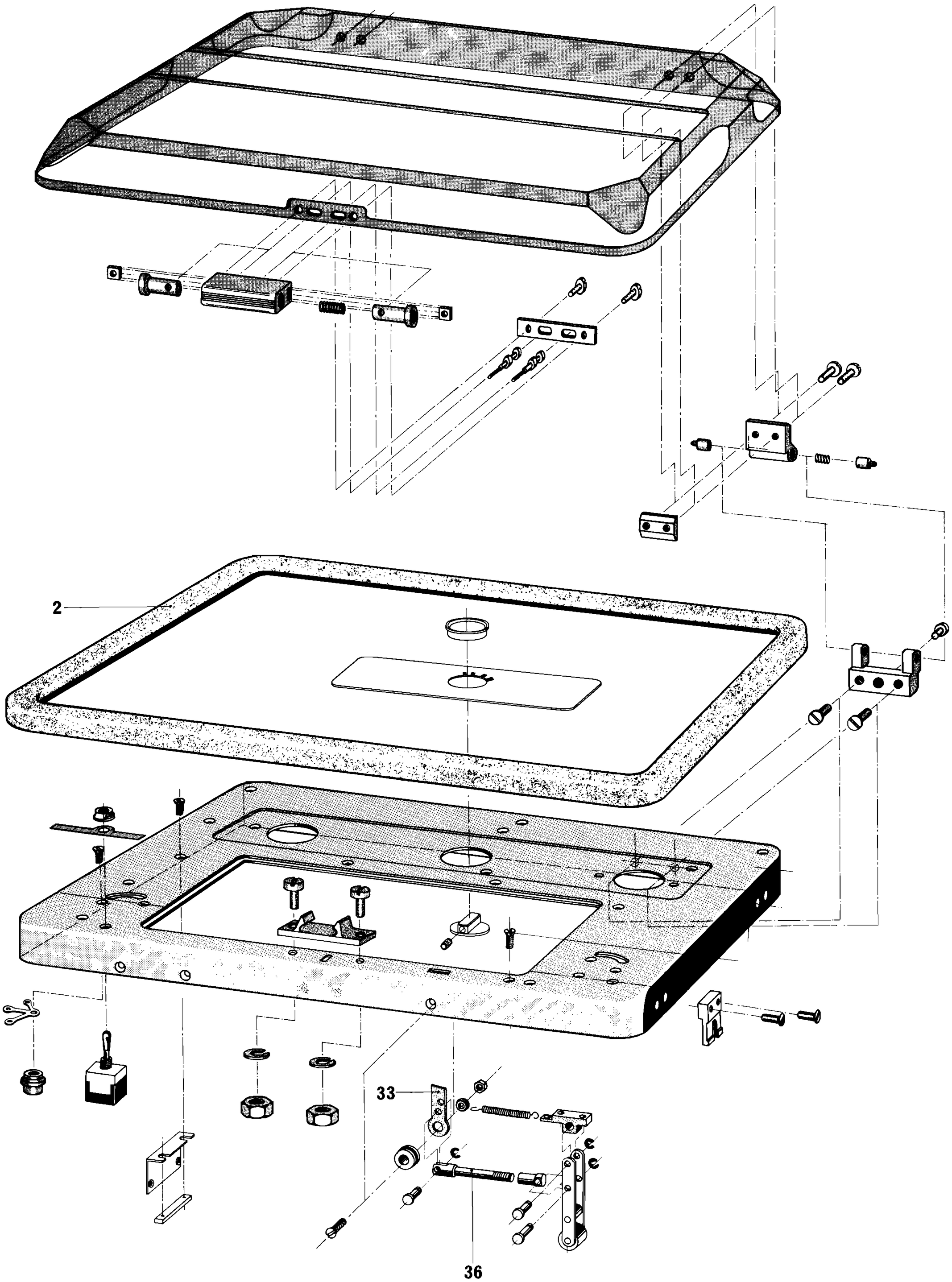
2
33
36

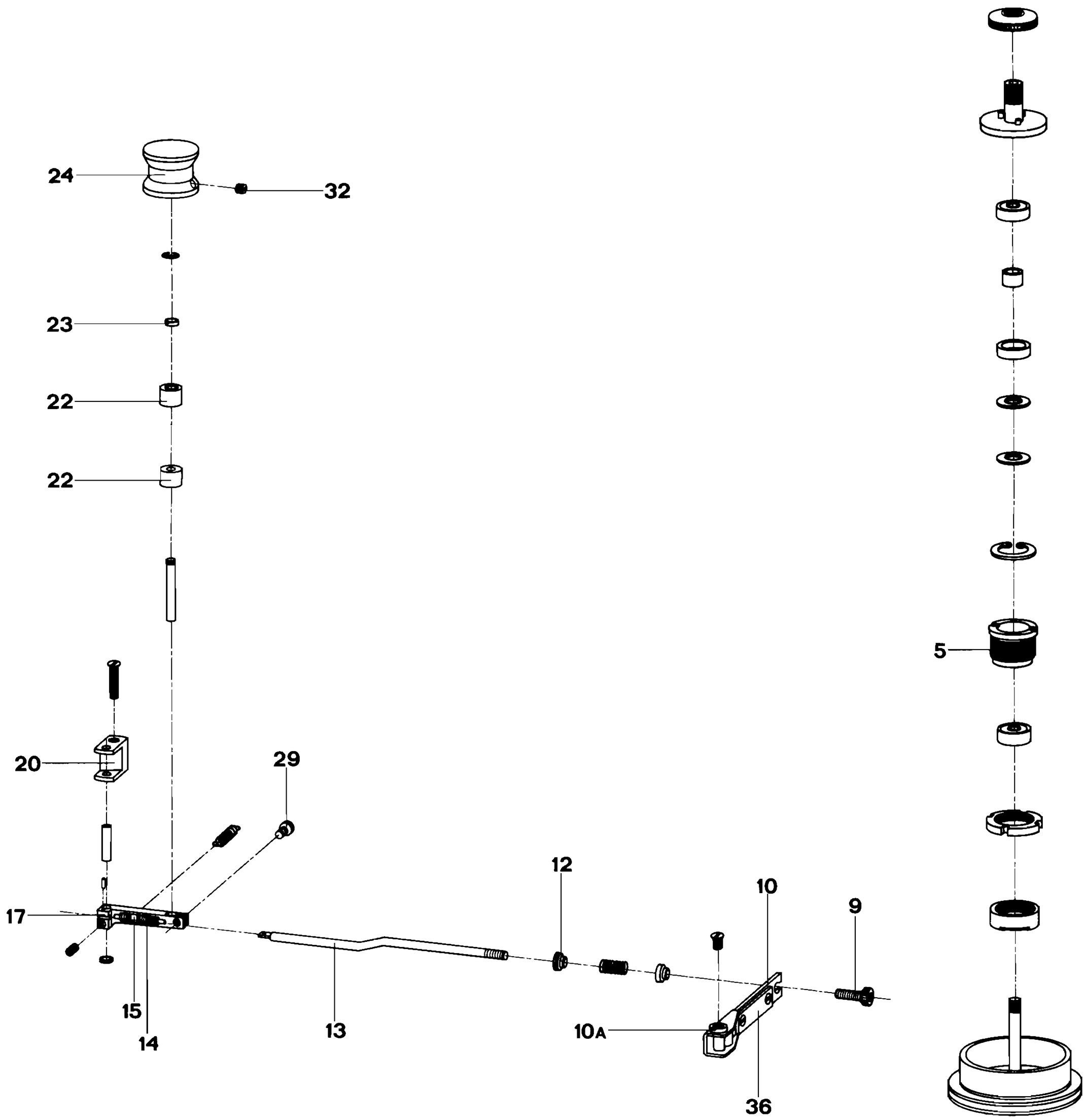
24
32
23
22
22
20
29
17
15
14
13
12
10
9
10A
36
5

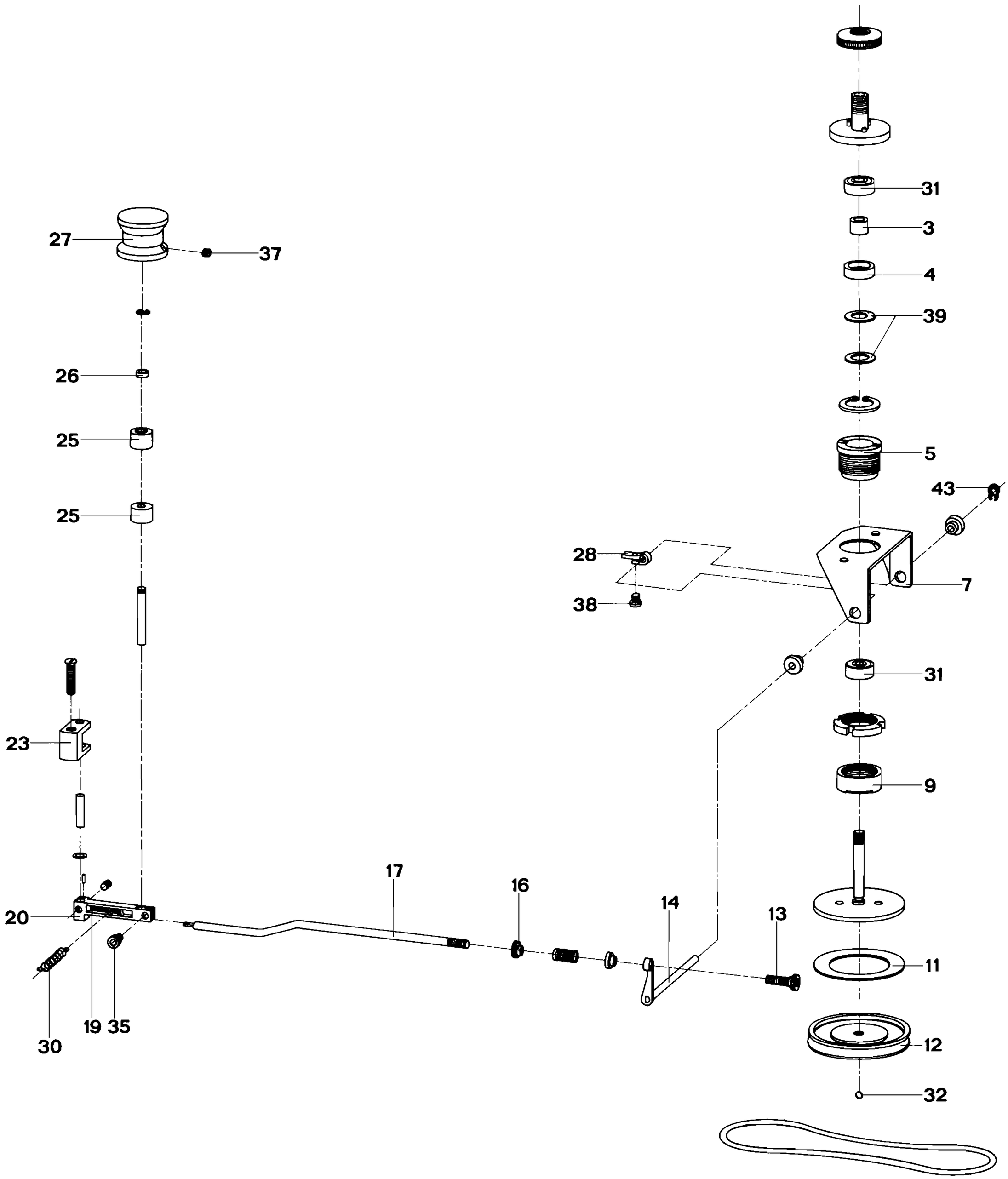
27
37
26
25
25
23
20
30
19
35
17
16
14
13
28
38
31
3
4
39
5
43
7
31
9
11
12
32

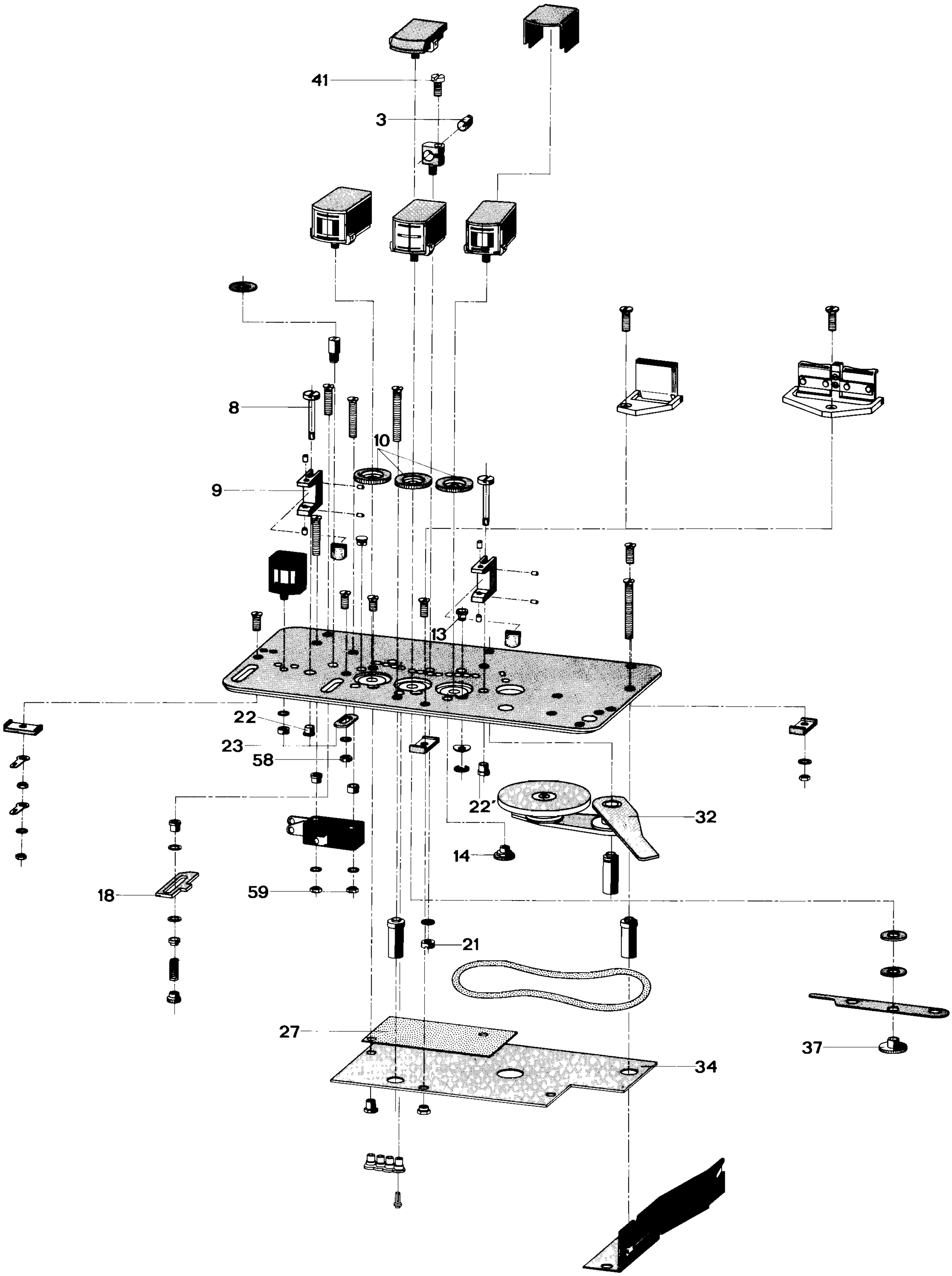
41
3
8
10
9
13
22
23
58
22'
32
14
18
59
21
27
34
37

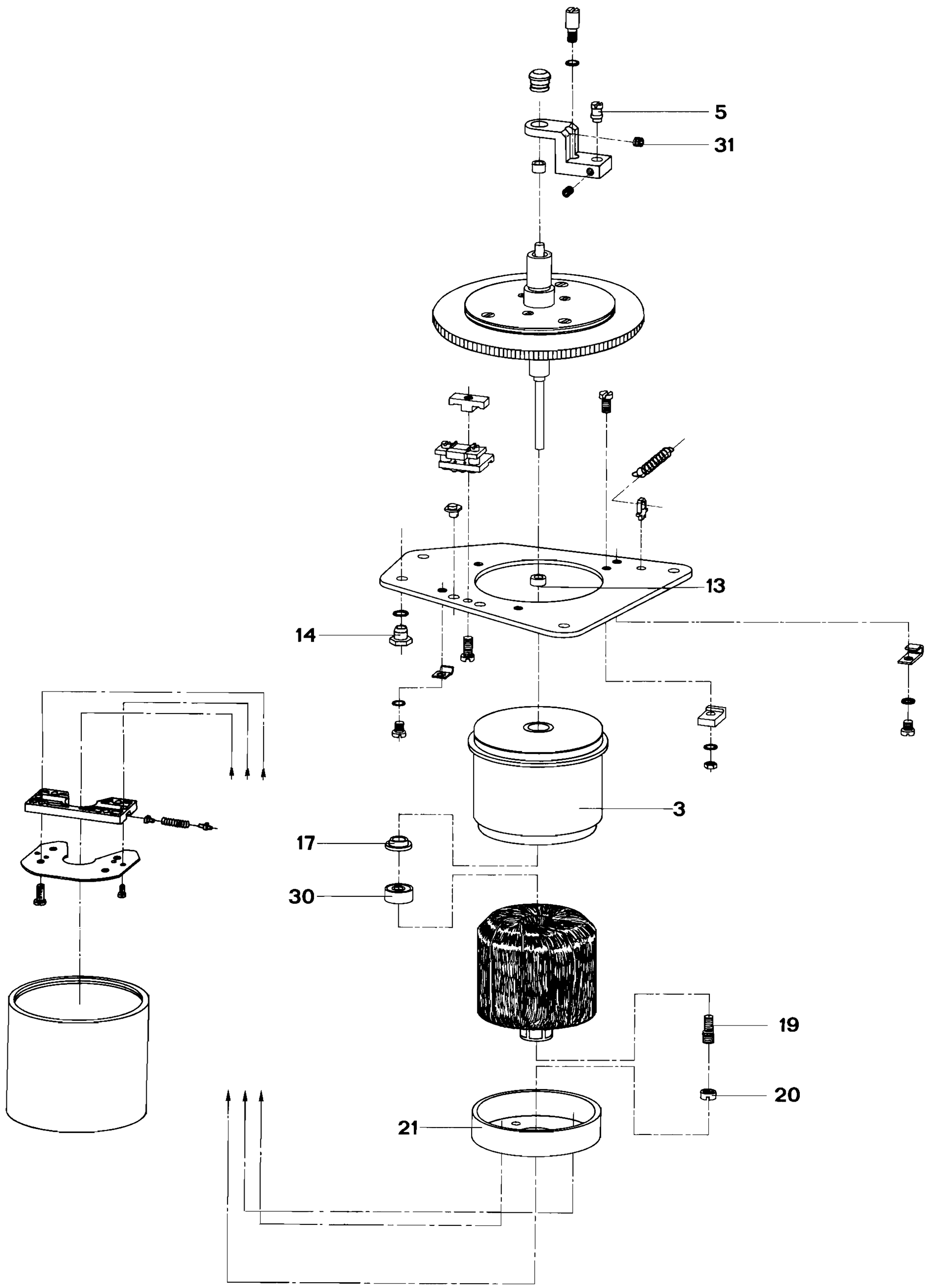
5
31
13
14
3
17
30
19
20
21

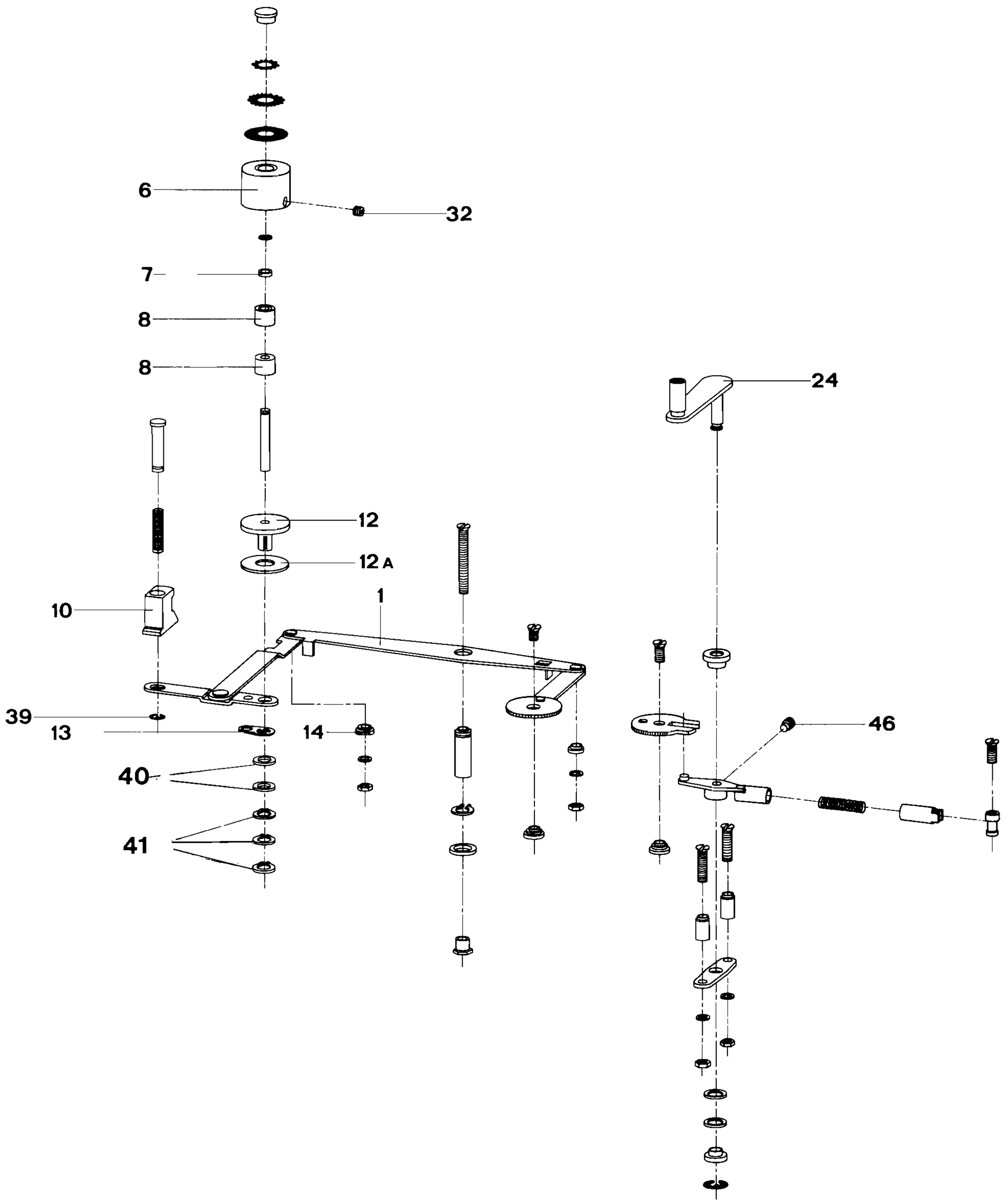
6
32
7
8
8
24
12
12 A
10
1
39
13
14
46
40
41

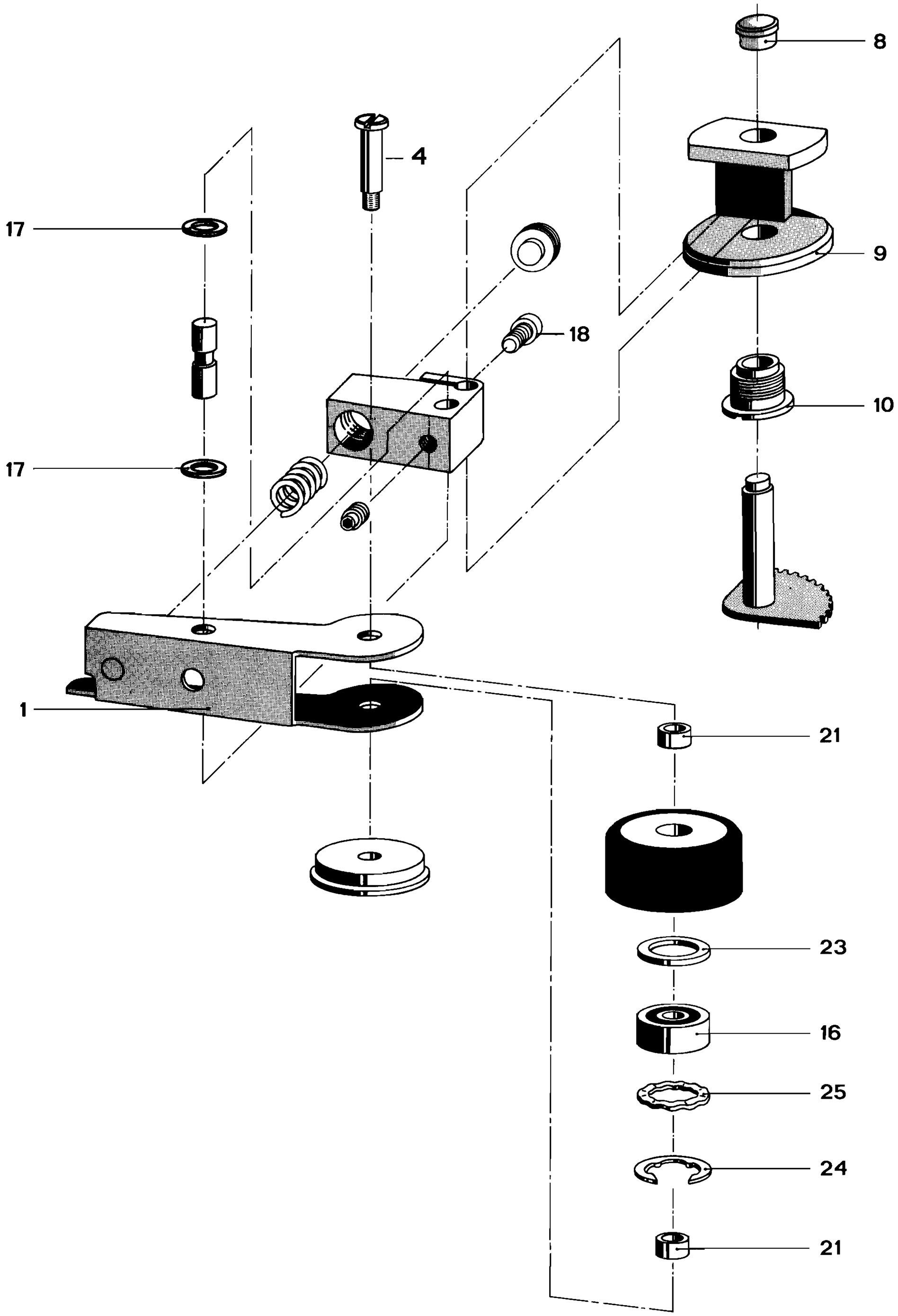
8
4
17
9
18
10
17
1
21
23
16
25
24
21

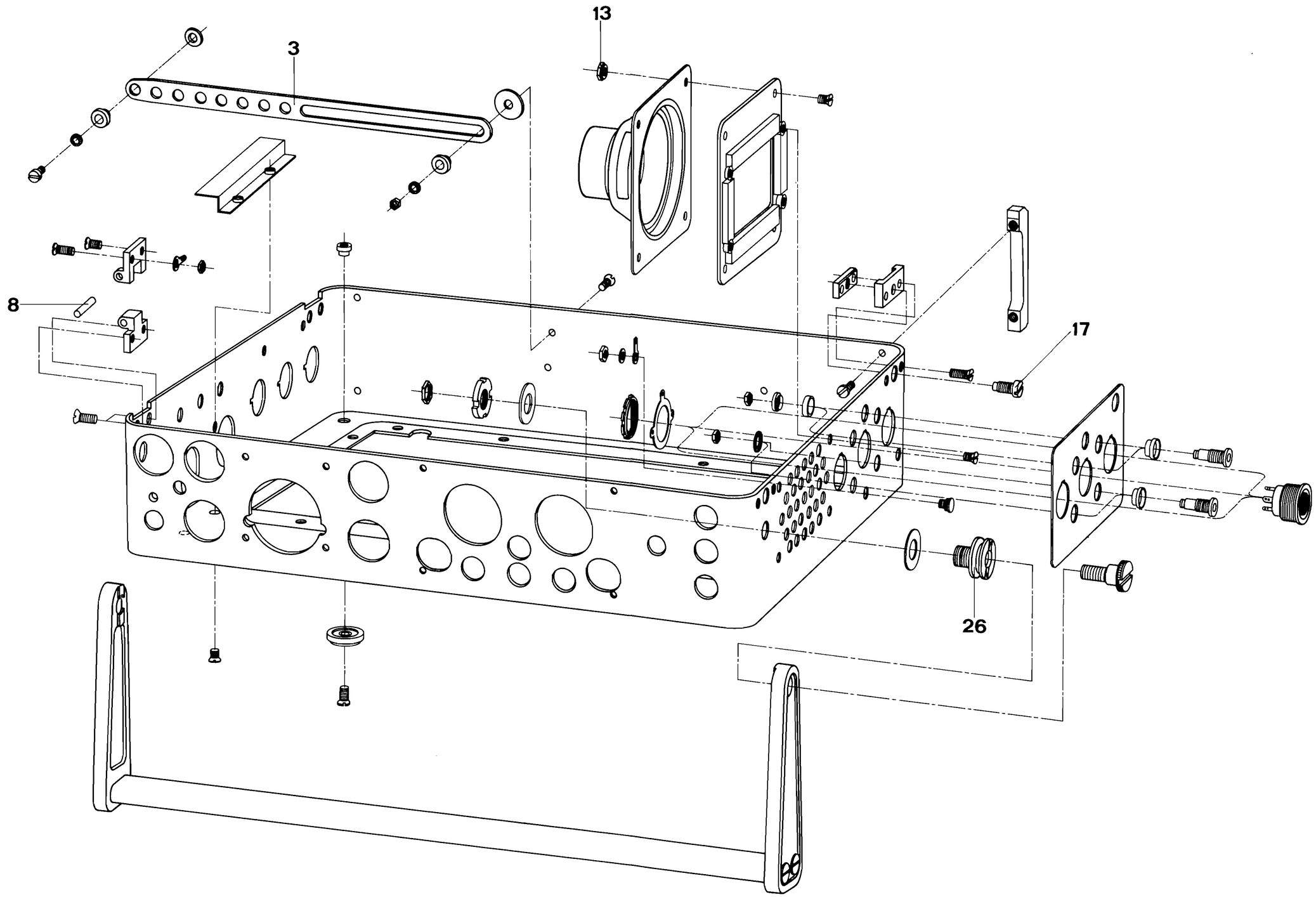
13
3
8
17
26

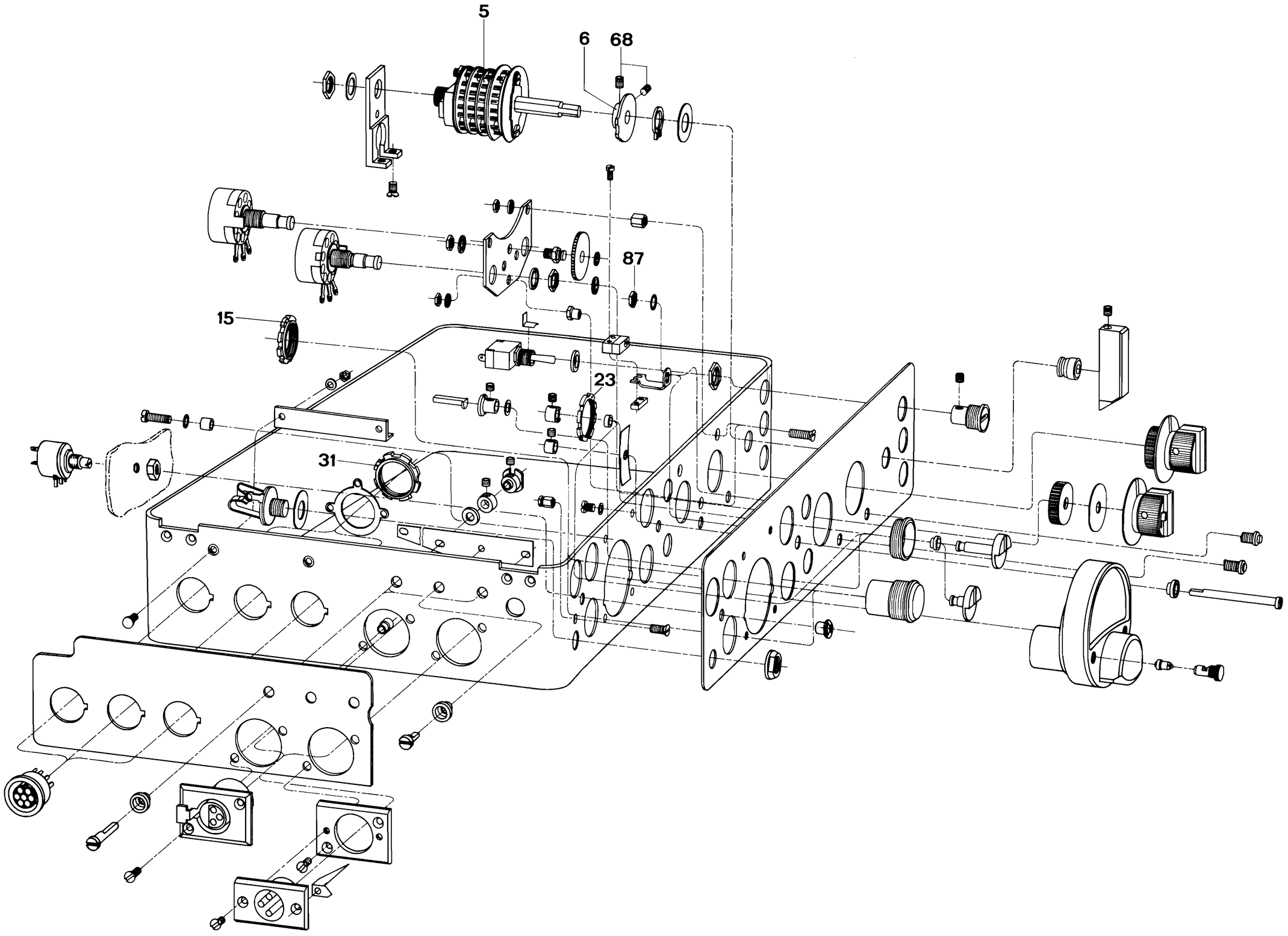
5
6
68
87
15
23
31

2.6 MECHANICAL DRAWINGS AND PARTS LIST

M1-S	TAPE DECK ASSEMBLY
M2-S	TAPE DECK ASSEMBLY
M3-S	BOX AND CONTROL ASSEMBLY

M1 – S TAPE DECK ASSEMBLY

01 04 110 012	1	Reel nut, metal
01 04 110 010	1	Reel nut, plastic
07 04 125 000	**2**	**Reel holder, left**
37 70 501 601	3	Ball bearing Ø 5/16x5
71 04 220 000	**4**	**Bearing housing, complete**
40 45 720 130	5	Switch Nikkai E–2013/S
07 04 120 000	**6**	**Brake drum assembly**
07 04 150 000	**7**	**Reel holder, right**
71 04 168 100	**8**	**Clutch pulley spindle assembly**
71 04 114 000	**9**	**Clutch felt, greased**
71 04 165 100	**10**	**Clutch pulley, complete**
71 04 497 000	**11**	**Hinge fixed on chassis (without fixing screw)**
71 04 498 000	**12**	**Mobile half of lid hinge assembly**
71 04 493 000	**13**	**Cover catch kit**
25 04 490 101	14	Plexi lid
71 04 490 000	**14a**	**Lid, Plexi, complete**
71 04 491 000	**14b**	**Preassembled lid with lock**
71 04 155 000	**15**	**Tension roller**
70 14 650 000	**16**	**Tape counter graduated in minutes**
01 04 110 142	17	Locking catch
71 04 118 000	**18**	**Latch replacement kit ***
25 04 110 133	19	Tension spring
71 04 176 000	**20**	**Tension arm assembly, clutch side**
01 04 110 014	21	Plate for locking (without fixing screw)
71 06 025 000	**22**	**Shielding assembly for chassis**
71 04 173 000	**23**	**Clutch lever, complete**
01 04 110 011	24	Bearing for clutch spindle
33 51 003 044	25	Elastic Benzing clip (d1 = 3 mm)
37 20 002 000	26	Ruby ball D = 2
71 04 185 100	**27**	**Pinch wheel control assembly**
71 02 032 000	27a	Pinch wheel control lever
71 06 015 000	**28**	**Oscillator board shielding, complete**
71 04 113 000	**29**	**Brake felt, greased (without fixing screw)**
71 04 135 000	**30**	**Brake support with reel brake**
71 04 131 000	**31**	**Tension arm assembly, brake side**
71 04 499 000	**32**	**Chassis / box hinges kit**
71 06 115 000	**33**	**Chassis, preassembled**

* For chassis with old closing mechanism, in case of new lid fitted with new closing mechanism installation

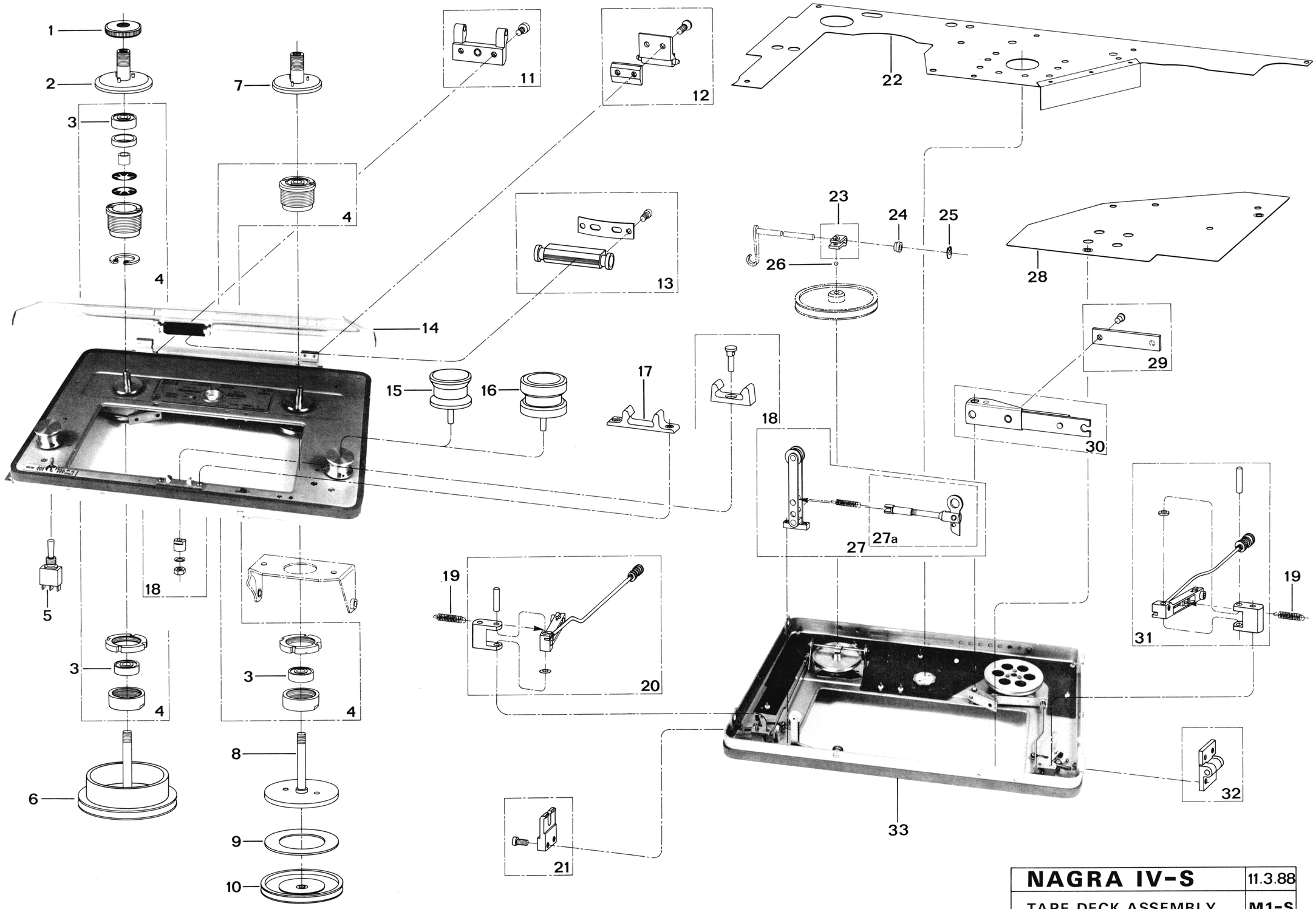

NAGRA IV-S	11.3.88
TAPE DECK ASSEMBLY	M1-S

M2 – S TAPE DECK ASSEMBLY

71 06 230 000	**1**	**Pilot head substitute assembly**
71 04 387 000	**2**	**Cylinder support, complete**
71 06 220 000	**3**	**Pilot head**
71 06 221 000	**3a**	**Time Code head**
71 06 210 000	**4a**	**Record head, small tracks**
71 06 211 000	**4b**	**Record head, large tracks**
71 06 215 100	**5a**	**Playback head, small tracks**
71 06 216 100	**5b**	**Playback head, large tracks**
71 04 388 000	**6**	**Azimuth discs, set of 5, for audio and pilot heads**
01 04 255 014	**6a**	**Height adjustment disc for Time Code head, thickness 1.1 mm**
01 04 255 007	**6b**	**Height adjustment disc for Time Code head, thickness 1.3 mm**
71 06 218 000	**7**	**Shielding for pilot and playback head**
71 04 276 000	**8**	**Mobile guide kit**
71 04 279 000	**9**	**Fixed guide kit**
71 04 280 000	**10a**	**Stroboscope 50 Hz**
71 04 285 000	**10b**	**Stroboscope 60 Hz**
71 06 217 000	**11**	**Shielding for playback head**
71 04 269 000	**12**	**Bearing bracket kit**
37 70 401 302	14	Ball bearing Ø 4/13 x 5
71 04 296 000	**15**	**Pinch wheel kit, without ball bearing**
71 04 298 000	**15a**	**Pinch wheel preassembled, with ball bearing**
71 04 295 200	**16**	**Pinch wheel assembly**
71 09 174 000	**17**	**Erase head**
71 04 470 100	**18**	**Motor spindle assembly**
25 04 250 201	18a	Special screw M 2.5
01 04 250 102	18b	Locking nut
01 04 250 104	18c	Ball bearing pressure ring
71 04 379 000	**19**	**Tachometric head assembly**
01 04 435 001	20	Dust seal
37 70 401 301	20a	Ball bearing Ø 4/13 x 5, high precision
25 08 165 010	21	Carbon brush for motor
25 04 460 002	22	Compression spring for carbon brush
71 04 460 000	**23**	**Carbon brush support kit, for motor**
25 04 310 006	24	Drive belt 88 x 3
71 04 310 000	**25**	**Pulley, fast rewind assembly**
71 04 320 000	**26**	**Control lever assembly**
71 04 326 000	**27**	**Pinch wheel lever kit with locking assembly**
25 04 100 003	28	Compression spring
01 04 260 001	29	Locking cam
40 57 101 000	30	Microswitch Unimax 2TMG–1
71 04 430 200	**31**	**Motor without shaft**
71 04 480 100	32	Motor shielding cup

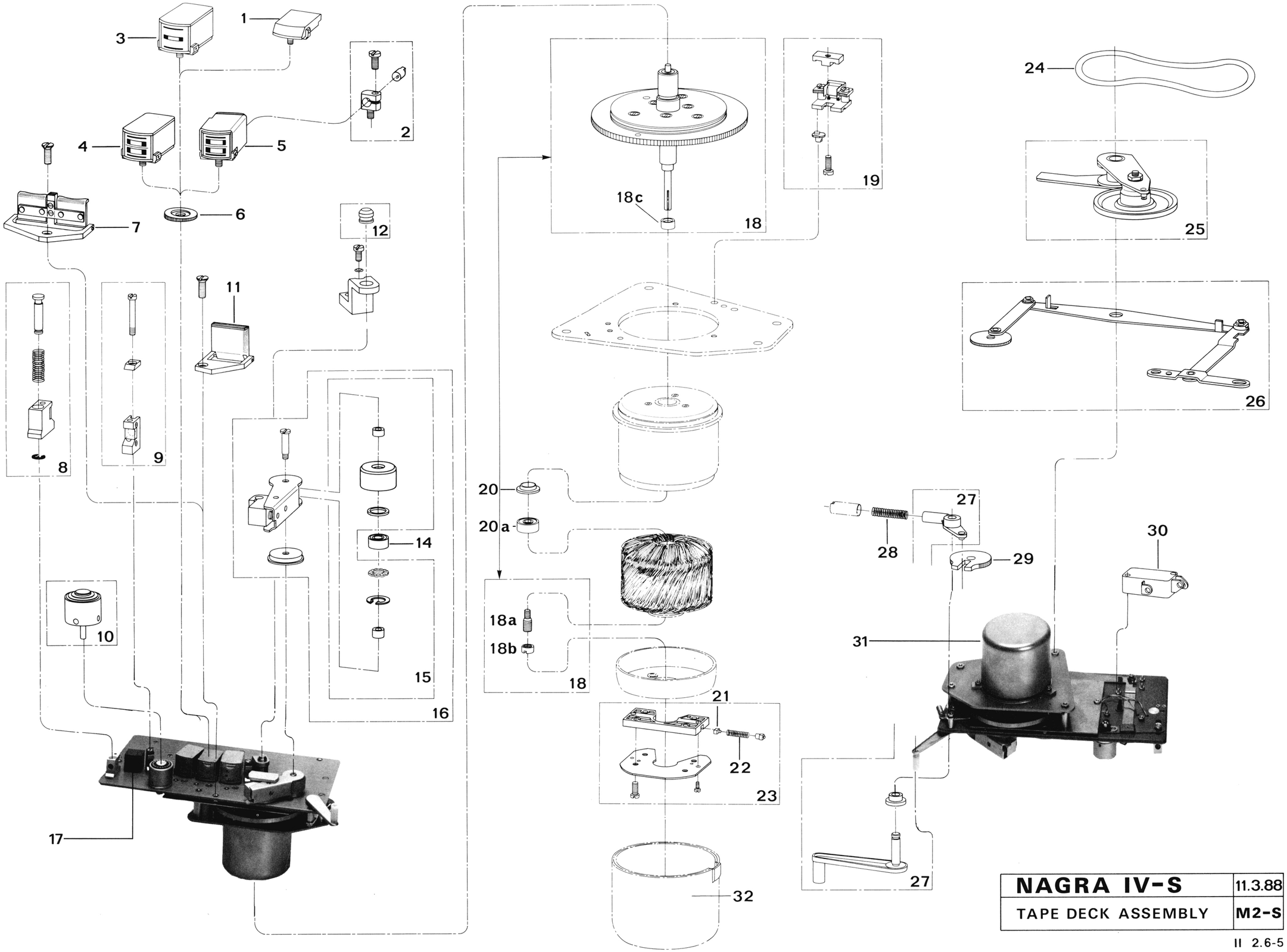

NAGRA IV-S	11.3.88
TAPE DECK ASSEMBLY	M2-S

M3 – S BOX AND CONTROL ASSEMBLY

71 04 655 000	**1**	**Battery contact assembly, without nut**
41 82 191 250	2	Fuse Bulgin 2,50 A for battery contact
71 04 651 000	**3**	**Battery contact with fuse and mounting nut**
01 06 510 127	4	Battery case
71 04 640 100	**5**	**Cover for battery case**
71 06 550 000	6	Loudspeaker assembly
01 04 510 027	7	Skid for vertical position
01 04 515 102	8	Fixing bar
71 04 518 000	**9**	**Foot, kit**
25 04 515 101	10	Fasterner screw
40 24 303 000	11	Socket, DIN (TUCHEL) female 4 pole
40 24 306 000	12	Socket, DIN (TUCHEL) female 7 pole
40 24 305 000	13	Socket, DIN (TUCHEL) female 6 pole
71 04 530 000	**14**	**Banana socket kit, insulated**
25 04 500 202	15	Handle fixing screw
01 14 124 001	15a	Screw for fixing handle and QHCP–2 strap
71 04 531 000	**16**	**Ground banana socket, complete**
81 06 935 000	**17**	**Main selector, strapped**
01 06 500 002	18	Cam for main selector
40 45 720 220	19	Switch Nikkai E–2022/S
40 45 720 202	19a	Switch Nikkai M–2020/S
40 45 720 250	20	Switch Nikkai E–2025/S
40 45 720 120	21	Switch Nikkai E–2012/S
01 06 520 005	22	Intermediate toothed wheel
07 06 524 000	23	Potentiometer 10 kOhm modified
71 06 520 000	**25**	**Coupled potentiometer assembly**
40 47 901 000	26	Switch, Crouzet
71 06 610 000	**27**	**Cable shielding**
40 22 502 000	28	Stereo Jack socket 1/4" (6.25 mm)
23 06 510 031	29	Socket Switchcraft female 3 poles (NAB), modified
01 06 510 008	30	Spindle, long
01 06 510 012	31	Spindle, short
40 26 606 010	32	Socket, Cannon male 3 pole (CCIR)
41 81 551 250	33	Fuse 2,50A Pico 2,4 x 7 mm
01 04 510 109	**34**	**Knob for selector**
71 06 522 000	**35**	**Knob assembly (green)**
01 06 510 005	36	Toothed wheel, free moving
01 06 510 006	37	Clutch disc
71 06 521 000	**38**	**Knob assembly (red)**
71 06 535 000	**39**	**Push button with lock**
71 04 542 000	**40**	**Push button**
01 06 510 017	41	Black knob with long shaft
71 06 541 000	**42**	**Rotating indicator**
01 06 510 023	43	Black knob with short shaft
01 06 510 021	44	Spindle
01 06 510 007	45	Nut for headphones Jack socket
41 11 304 000	46	Lamp 12 V KGL
01 06 530 008	47	Lamp holder
01 06 530 014	47a	Lamp holder, lighting for TC keyboard
26 06 530 100	48	Modulometer assembly
01 06 510 044	49	Nut for headphones potentiometer
71 04 684 000	50	Strap plug for crystal

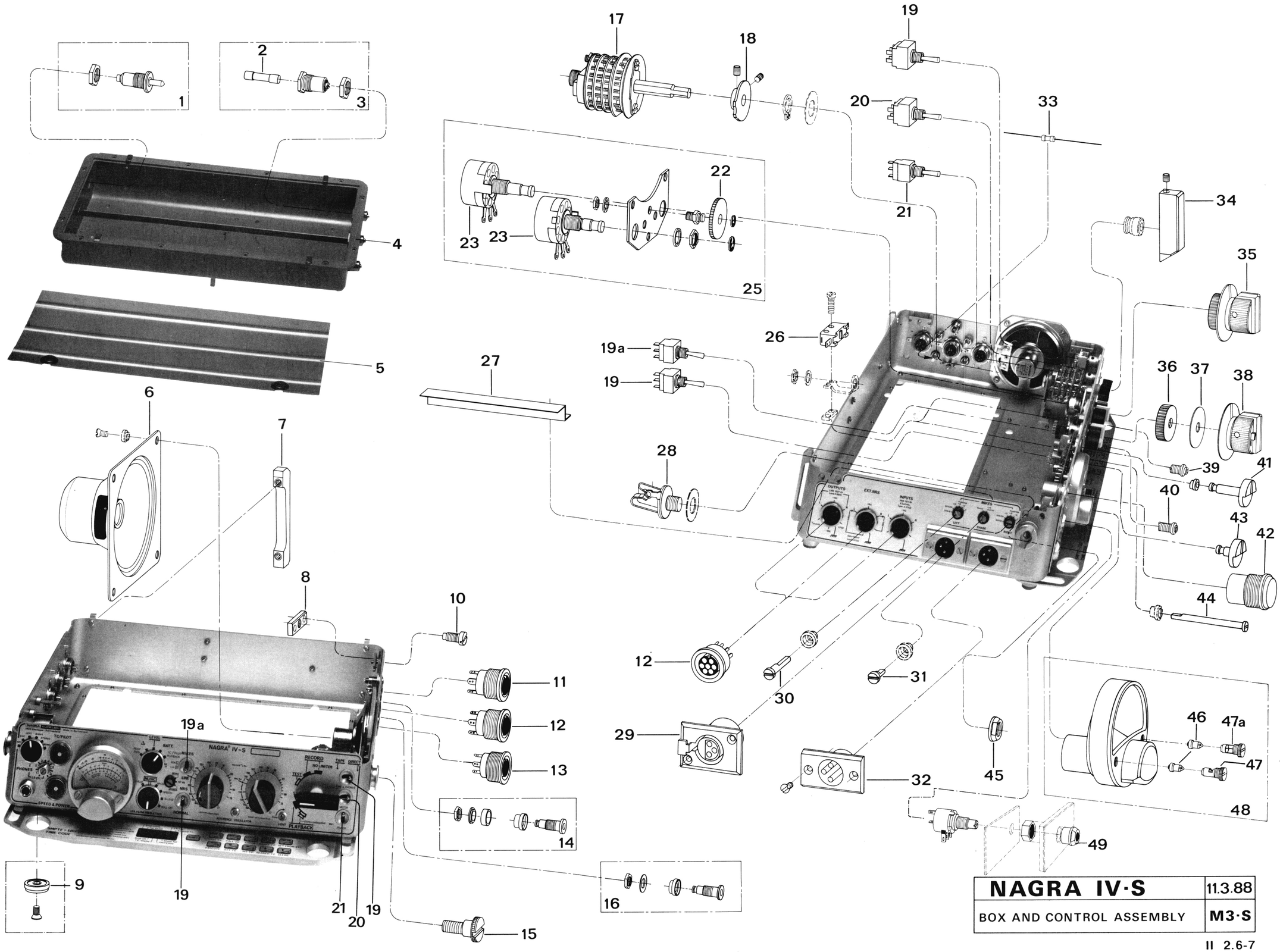

NAGRA IV·S	11.3.88
BOX AND CONTROL ASSEMBLY	M3·S

AUDIO CALIBRATION 3

CHAPTER III "AUDIO CALIBRATION"

TABLE OF CONTENTS

		Page No.
1.1	**Measuring equipment**	III 1.1–1 to 1.1–2
1.2	**Stabilized voltage:**	III 1.2–1 to 1.2–2
	Tape speed adjustment	III 1.2–2
1.3	**Direct chain:**	III 1.3–1 to 1.3–3
	Gain and frequency response checking	III 1.3–1
	Reference generator and modulometer	III 1.3–1 to 1.3–2
	Modulometer selectors	III 1.3–2 to 1.3–3
	Microphone preamplifier	III 1.3–3
	Line and phones amplifier	III 1.3–3
1.4	**Playback chain:**	III 1.4–1 to 1.4–2
	Azimuth alignment	III 1.4–1
	Playback level	III 1.4–1
	Frequency response table	III 1.4–2
1.5	**Recording chain:**	III 1.5–1 to 1.5–5
	Azimuth and bias frequency	III 1.5–1
	Bias level CCIR	III 1.5–1 to 1.5–2
	Bias level NAB	III 1.5–3
	Recording level	III 1.5–3
	Frequency response	III 1.5–3
	Antidistortion / limiter	III 1.5–4 to 1.5–5
	Recording level and crosstalk	III 1.5–5
1.6	**Erasing:**	III 1.6–1
	Tachometric and bias residue	III 1.6–1
1.7	**Pilot chain:**	III 1.7–1 to 1.7–3
	Pilot head azimuth	III 1.7–1
	Carrier frequency and pilot level	III 1.7–1 to 1.7–2
	Modulometer and alarm	III 1.7–2
	Record and playback	III 1.7–3
	Crosstalk and pilot noise	III 1.7–3
	Erasing by recording a carrier frequency	III 1.7–3
1.8	**Time code chain:**	III 1.8–1 to 1.8–3
	Head alignment	III 1.8–1
	Playback and record	III 1.8–1
	Recording level	III 1.8–2
	Crosstalk	III 1.8–3
1.9	**Multifrequency test tapes**	III 1.9–1 to 1.9–2
1.10	**Azimuth test tape**	III 1.10–1
1.11	**Circuit adjustments**	III 1.11–1 to 1.11–9
	Circuit adjustment. Points–box (Pilot version) **A1–S**	III 1.11–3
	Circuit adjustment. Points–box (TC version) **A2–S**	III 1.11–5
	Detail of A2–S circuit adjustment. Points–box (TC version) **A2'–S**	III 1.11–7
	Circuit adjustment. Points–tape deck **A3–S**	III 1.11–9

1.1 MEASURING EQUIPMENT

A. INSTRUMENTS

1. Electronic A.C. voltmeter of high sensitivity, incorporating dB range switches (Brüel & Kjaer 2610 or Sennheiser UPM 550)
2. Third octave filter set. (Brüel & Kjaer 1618)
3. Low distortion audio signal generator with stabilized output from 20 Hz. to 20 kHz. (Brüel & Kjaer)
4. Dual trace oscilloscope
5. Universal A.C. voltmeter with a linear frequency response up to at least 200 kHz. (Hewlett Packard 400E)
6. Frequency meter
7. Digital multimeter
8. Wow and flutter meter
9. D.C. power supply 0–30V, 0–1A
10. Batteries or ATN–3 external power supply

B. EQUIPMENT

1. Demagnetizer (such as the Kudelski MAG 220 code no 90 801)
2. Audio monitor (such as the Kudelski DSM code no 14700)
3. High quality stereo headphones
4. Full set of calibration test tapes such as the following Kudelski tapes:

BMIN–9	(No 91710) Multifrequency test tape IEC/NAB	9.5 cm/s
BMI–19	(No 91711) Multifrequency test tape IEC	19 cm/s
BMI–38	(No 91712) Multifrequency test tape IEC	38 cm/s
BMN–7	(No 91716) Multifrequency test tape NAB	19 cm/s
BMN–15	(No 91717) Multifrequency test tape NAB	38 cm/s
BMM–38	(No 91718) Multifrequency test tape NAGRAMASTER	
BVQ–3,15	(No 91731) Speed test tape 1/4" 3.15 kHz	
BVQ–1	(No 91730) Speed test tape 1/4" 1.00 kHz	
BA–19	(No 91735) Azimuth test tape 19.05 cm/s	

C. TOOLS

1. Head azimuth adjustment tool (KSA No 01 90 900 042)
2. Set of circuit extender boards (KSA No 71 91 501 000)

NOTE: All the adjustment points referred to in this section can be found in the drawings at the end of this chapter (pages III 1.–1, 1.8–2 and 1.8–3) as well as in the electronic circuit diagrams and component layout drawings, in chapter VII SCHEMATICS. It should be noted at this point that before most of the following calibrations can be made correctly, all mechanical calibrations must be completed and correct. If this has not been done, then refer to chapter II of this manual before proceeding.

OPENING THE RECORDER

To open the recorder it is necessary to loosen the two screws (17) (on drawing 8) which are marked TO OPEN on the right–hand side of the recorder. Do not fully remove them as their locking bars will fall into the machine and may cause a short circuit. When these have been loosened, lift the deck from right to left, until it has just passed the vertical point.

1.2 STABILIZED VOLTAGE

Power the recorder with either a fresh set of internal batteries or an external power supply ATN–3. Switch the main function selector to the TEST position and place a D.C. voltmeter between pin 4 of the right–hand connector on the VOLTAGE AND SPEED STABILIZER circuit A22 and the ground.

NOTE: The NAGRA IV–S and the IV–S TC are both positive earth.
(This means that the positive lead of the non floating instruments should be connected to the chassis of the recorder).

On the above mentioned pin of the connector, you should measure 10 V ±100 mV. If this is not the case, then adjust the value of R88 and R89 on voltage and speed stabilizer circuit A22.

TACHOMETRIC ADJUSTMENT

Connect an electronic A.C. millivoltmeter between pins 19 and 20 on voltage and speed stabilizer circuit A22, to measure the tachometric voltage coming from the tacho head. Do not hang probes on the connections of the head itself: this is a critical adjustment and the weight of the test probes may move the position of the head and affect the readings.

Switch the recorder to playback at 7½ ips (19.05 cm/s) (no tape needed) and measure for the following:

Speed	Voltage
19 cm/s (7½ ips)	16.5 ±1.5 mV

Simultaneously, the minimum value of the residual tachometric voltage should be obtained on the audio line output. Connect the 1/3 octave selective filter and the high sensitivity A.C. voltmeter to the line output and measure for the following:

Speed	Frequency	Line output
7½ ips (19 cm/s)	2 kHz	<–83 dB with ref. to 1.585 V

If these voltages are not correct, then adjust the tachometric head by slightly loosening securing screw **A** and then gently turning the two side eccentric screws **B** so as to move the head either towards or away from the phonic wheel. Find the position which gives the minimum residual tachometric voltage at the same line output: as a general rule the gap at **C** chould be smaller than the gap at **D**. The "Gap" referred to is the distance between the head and the phonic wheel. Tighten screw **A**. See illustration. It is important to move them both evenly to keep the head symmetrical with respect to the wheel. It is recommended to make this adjustment with the machine in the STOP position, and the switch on again (after making sure that the tachometric head is not touching the phonic wheel) to check the new reading. This is because the head lies very close to the phonic wheel and if overadjusted, damage can be caused to the teeth of the tacho wheel.

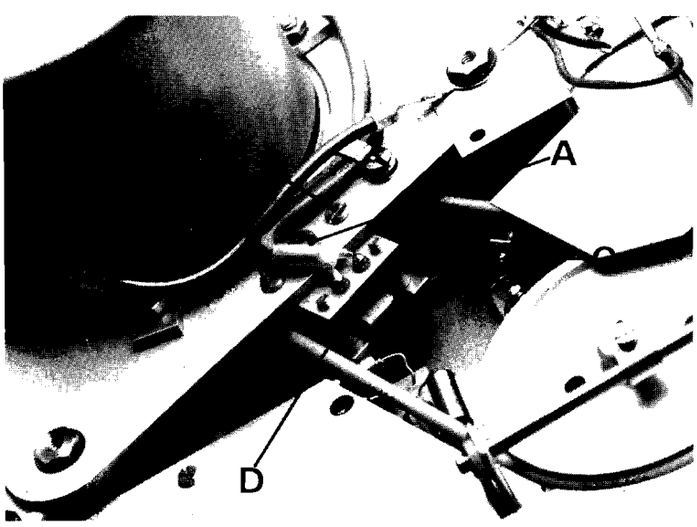

Check the output level of the tachometric head for the remaining speeds:

Speed	Voltage
3¾ ips (9.5 cm/s)	Approx. 10 mV
15 ips (38 cm/s)	Approx. 20 mV

Switch the machine to the playback as well as the record positions and check that the rotary SPEED AND POWER indicator shows a white segment in all these positions. If this is not the case then one of the following problems has occurred:

- The motor is overloaded
- The power supply is insufficient.

Put the machine in the fast forward mode and check that it accelerates, and then slows down again when taken out of fast forward. Check this at all tape speeds.

TAPE SPEED ADJUSTMENT

Carefully demagnetize the tape heads, then put a speed calibration test tape on the machine. Connect a frequency counter to the audio outputs and playback the section of tape corresponding to the speed 3¾ ips (9.5 cm/s). Check that the frequency on the line output is equal to the frequency recorded on the speed test tape, i.e. 3.15 kHz or 1 kHz with a tolerance of ±0.1%. Proceed in the same manner for 7½ ips (19 cm/s) and finally 15 ips (38 cm/s). If necessary, each of these positions may be adjusted using potentiometers R39, R24 and R35 on circuit A22 respectively.

NOTE: The 3¾ ips (9.5 cm/s) speed must be adjusted before the other two speeds as this will influence the remaining speed settings.

Finally check the speed visually by looking at the stroboscope roller, while shining a mains powered lamp on it, 50 or 60 Hz depending on the value on the roller itself. (60 Hz for NAB machines and 50 Hz for CCIR machines). Check that the relevant ring appears stationary at each speed.

NOTE: This roller is extremely accurate, but due to the mechanical tolerances in manufacturing it, even if the machine has been set very precisely using a test tape, the stroboscope rings may still appear to turn very slowly. Thus, this roller should only be used as a rough check of the speed and should not be used for actual calibration.

1.3 DIRECT CHAIN

The direct chain refers to the direct input and output amplifiers, thus the gain and frequency response of the machine without going on and off tape are considered.

This section covers the calibration of direct amplifiers A4 and A5, reference generator A6, modulometer A7 and A8 and line amplifier A10.

DIRECT AMPLIFIER

Position of controls:

MIKES / LINE switch (10) in the LINE position
Switch (12) in the STEREO position
Filter selector (14) in the FLAT position
Level controls (6) and (8) fully clockwise
LINE / PHONES switch (1) in the DIRECT position

GAIN CHECKING

Supply a current of between 7.6 and 8.0 µA at a frequency of 1 kHz to the line input on the left-hand side of the machine. This is done using the QCSE line input cable (KSA No 16900) which must be fed with a voltage of between 465 and 490 mV from the audio signal generator.

Connect an AC voltmeter to the line output and then vary the input current in the above mentioned range in order to obtain an output of 1 V. This should produce a 560 mV level on the outputs of the two direct amplifiers (A4 and A5). A convenient test point to measure this is on the connection pins of the LINE AND PHONES switch. If necessary, then adjust resistors R7 and R8 on boards A5 and A4 and / or resistors R9 and R59 on board A10 for the left and right channels respectively. Deviation between 1 V on the line output and 560 mV on the line and phones switch should not exceed ±0.2 dB while still keeping 7.6 µA on the line input. These are 0 dB reference levels and can be expressed as follows (RMS values):

Line input (current)	7.8 µA ±2.5% (7.6 to 8.0 µA)
Direct amplifier output	560 mV
Line output (asymmetrical)	1.00 V
Headphone output	Max 0.7 V
Signal frequency	1.0 kHz.

FREQUENCY RESPONSE CHECKING

Vary the frequency of the 0 dB signal fed to the line input from 30 Hz to 20 kHz. Check that the frequency response of the line output remains flat (±0.5 dB). This frequency response can be adjusted, if necessary, by changing the value of R17 which is in parallel with R1, of A4 or A5 depending on the channel to be adjusted.

REFERENCE GENETATOR (A6)

Sine wave version

The reference generator output is a composite signal of a 1.1 kHz sine wave and its 9th harmonic, in order to make azimuth adjustment possible by the operator in the field. The composite signal level is set at 0 VU which corresponds to –8 dB on the modulometer. The frequency, distortion and the symmetry of the 10 kHz peaks are factory calibrated using R217, R219, R221 and R224. The level of the 10 kHz component of the signal is adjustable by means of R206.

The LEVEL of the 10 kHz component, as measured using a 1/3 octave filter should be –36 dB, with reference to 0 dB.
Adjust R210 to bring the strongest channel to –8 dB on the modulometer, and use R13 to align the other channel to this (A4 or A5). Check and, if necessary, adjust the 10 kHz component level making sure that the –8 dB level on the modulometer remains untouched.

MODULOMETER A7, A8 and A23

Selector (12) in the LEVEL position.
The ∞ (infinity) adjustment is made without any signal at the line input. Adjust R6 / R56 on A8 to bring both needles to the ∞ (infinity) position.

NOTE: Do not exceed 220 kOhm otherwise the meter response will no longer be linear.

The 0 dB adjustment is made by applying a 0 dB level signal, so as to achieve 1 V at the line output and adjusting R18 and R68 on A8 to bring both needles to the 0 dB mark on the modulometer. These adjustments must be made successively as they influence each other.

Check the frequency response:	1 kHz 0 dB level signal 40 Hz to 20 kHz 0 dB ± 0.5 dB.
Check the linearity:	at –10 dB ± 0.5 dB at –20 dB ± 1.0 dB

Selector (12) in the DELTA position.

The red needle indicates the groove depth of the record. 0% adjustment is made without any signal at the input, by means of R16 on A9. The maximum deflection adjustment is made by applying an 80 Hz 0 dB signal to channel one only, which corresponds to 1 V at the line output. Then adjust R26 on A7 to obtain 94% ±2%. Then increase the frequency to 1 kHz without changing the level and check that the needle indicates between 38% and 45%.

The green needle indicates the stronger level of the two channels.
Apply a 0 dB 1 kHz signal to both channels successively and then adjust R201 on A8 for the weaker of the two signals, until the meter indicates a deviation of 0 dB ± 0.5 dB.

Selector (12) in the BATT position

The red needle indicates the battery voltage on the volts per cell scale. Adjust the value of R3 on A23 until the meter reads 1.5 V / cell for a total supply voltage of 18 V ±5%.

Decrease the supply voltage to 11 V ±5% and the meter should read 0.9 V / cell, then decrease the supply voltage again and the speed and power sass indicator should turn black at 10 V ±10%.

The green needle indicates the voltage accross the motor terminals. At 15 ips (38 cm/s), in record mode, engage the pinch wheel against the capstan and lock the clutch assembly by hand (this is the right–hand spool or take–up reel). The meter should read 60% ±5%.

Decrease the supply voltage and the red needle should arrive in line with the green one, and at this point the rotary indicator "SPEED AND POWER" should turn black. The voltage is then 0.92 V (12 cells = 11 V).

Selector (12) in the M position.

The red needle indicates the motor current. At 15 ips (38 cm/s) engage the pinch wheel against the capstan and then block the clutch assembly by hand (right–hand reel holder). The meter should read 40% ±10%. The full 100% deflection of the meter corresponds to a current of 350 mA ±10% through the motor. For the indication of the green needle in this position see pilot section.

If the modulometer of the IV–S needs to be replaced then it is necessary to adjust R7 and R9 on board A23 so that the total resistance of this series resistance and the meter is equal to 500 Ohm. The necessary values of R7 and R9 resistors to achieve this are marked on the replacement modulometer on a small adhesive label.
Typically these resistors are 100 Ohm.

MICROPHONE PREAMPLIFIER A1, A2, A3

No adjustment is provided on these circuits as they are factory calibrated. However, both microphone channels should be checked for noise, with all types of microphones (dynamic, condenser with phantom and T power).

MICROPHONE POWER SUPPLY A12

Adjust the value of R24 or R25 to set the +12 V supply at +12 ±25 V and adjust the value of R4 to set the +48 V supply at +48 ±2 V

NOTE: The –12 V phantom power supply is in fact the normal –10 V supply used throughout the machine, furnished by voltage and speed stabilizer A22 and is therefore always slightly low and should not be increased to –12 volts.

LINE AND PHONES AMPLIFIER, HEADPHONES SWITCHING A9, A10

Adjust the value of R9 and R59 to obtain 1 V on the line output loaded with a 5 kOhm load, with 560 mV 1 kHz at the line amplifier input. See 1.3 direct chain gain setting on page III 1.3–1 for further details.

LOUDSPEAKER AMPLIFIER A11

Power supply

Adjust R15 to obtain a stabilized voltage of 11.3 V ±0.3 V.
Adjust R7 to obtain a total current of 2 mA ± 0.2 mA under no load conditions.

1.4 PLAYBACK CHAIN

(Circuit A14, see also the synoptic diagram)

Before any calibration of the playback chain is started, all mechanical and electronic calibrations listed before this point should have been carried out.

DEMAGNETIZE THE HEADS BEFORE USING A TEST TAPE

Audio test tapes will be needed for the following calibrations (see pages III 1.1–1 for the list of KSA test tapes). Multifrequency tapes for both CCIR and NAB standards are available from the KUDELSKI factory, and these require the use of a third octave filter set.

AGFA and BASF also make test tapes, but these are sequential single frequency tapes. They are available for the CCIR standard and comply with the DIN 45513 standard.

AMPEX make the same type of test tape for NAB machines.
Connect an A.C. voltmeter to the line output and thread a test tape onto the recorder. Turn level control potentiometers (6) and (7) to the fully counterclockwise position, and set the line and phones switch 1 in the TAPE position.

AZIMUTH ALIGNMENT OF THE PLAYBACK HEAD

Replay the azimuth test tape at 7½ ips (19 cm/s) and measure the level and phase of the two channel outputs on the voltmeter and on a dual trace oscilloscope. Adjust the head azimuth by rotating the toothed pinion (Allen drive) in front of the replay head (see mechanical drawing 4 position 13), to obtain the maximun possible output. When this point has been reached, then finely adjust it in order to bring the two signals into phase using KSA tool No 01 90 900 042. When the adjustment has been made, press alternately on each side of the head: if the output level (measured on the voltmeter) rises, then the azimuth position is not correctly adjusted. When the pressure is released, the amplitude should return to the original value. If it does not, then the head is not correctly mounted. This probably means that the spring washers under the head are flat. To overcome this problem, loosen the head fixing pinion by 1/4 of a turn and after repeating the head squaring, set the azimuth again. The amplitude variation between the two channels should not exceed 2 dB and the phase shift should not exceed 20°.

If the head has been removed or replaced, then it is recommended to make a complete turn of the azimuth disc below the head, as two azimuth points can often be found and one is of lower amplitude than the other.

The azimuth should now be quickly checked at the other two speeds.
If it is not approximately correct (or if the azimuth varies at any of the three speeds), check the condition of the head (if it has not been replaced) and check the mechanical adjustments and tape tensions.

PLAYBACK LEVEL

The playback level of the NAGRA IV–S is 510 nWb/m for 0 dB at all speeds.

Thus, a test tape recorded at 510 nWb/m will play its level section back at 1 V on the line output, and a test tape recorded at 320 nWb/m will playback at a level of 0.627 V at the line output.
Load a test tape of speed 15 ips (38 cm/s) and reproduce the tape.

Adjust the playback level of each channel using R10 and R60 on A14 respectively. There is only one playback level adjustment on the IV–S and this is made at 15 ips (38 cm/s). However, the levels at the other speeds must also be checked.

Load a tape of 7½ ips (19 cm/s), select the level section and play back the tape. The line output should show a maximum deviation of ±0.5 dB with reference t o 0 dB (as adjusted at 15 ips / 38 cm/s).

Load a test tape of 3¾ ips (9.5 cm/s), locate its level section and then play back the tape. The line output should show a maximum deviation of 0.8 dB with reference to 0 dB (as adjusted at 15 ips). Reference frequencies recorded for the three speeds on the Kudelski multifrequency test tapes are as follows :

Speed	Ref. Frequency
3¾ ips (9.5 cm/s)	400 Hz
7½ ips (19 cm/s)	500 Hz
15 ips (38 sm/s)	1000 Hz

HEAD GAP LOSS CORRECTION OR FREQUENCY RESPONSE

Firstly unsolder the two head damping resistors R1 and R51. Using a 3¾ ips (9.5 cm/s) test tape, put the machine in playback. Monitor the line outputs with an A.C. voltmeter or a third octave filter set if a multifrequency test tape is being used, taking the reference at 400 Hz. Adjust R41 and R91 on replay circuit A14 to obtain –0.5 dB at 10 kHz.

Change the speed to 15 ips (38 cm/s) and fit the corresponding test tape.

Adjust the head damping by means of the two resistors R1 and R51 in order to obtain the reference level at 20 kHz. Typical values of resistors R1 / R51 are found between 180 kOhm and 330 kOhm (max. 1 MOhm). These resistors MUST be installed. Check that the frequency response is ±2 dB from 30 Hz to 20 kHz.
After this has been done, check the response at all speeds and standards, using the corresponding test tapes.

FREQUENCY RESPONSE:

Speed	STD	Freq. response	Ref. level
15 ips (38 cm/s)	NAB / CCIR	31.5 Hz – 20 kHz ± 2 dB	1 kHz
15 ips (38 cm/s)	NAGRAMASTER	31.5 Hz – 20 kHz ± 2 dB	1 kHz
7½ ips (19 cm/s)	NAB / CCIR	31.5 Hz – 16 kHz ± 2 dB	500 Hz
3¾ ips (9.5 cm/s)	NAB / CCIR	31.5 Hz – 10 kHz ± 2 dB	400 Hz

NOTE: Due to the so called fringe effect resulting from the fact that a full width test tape is replayed by a narrow track head, the frequency response at the low end of the frequency range (30 Hz to 150 Hz) may be seen as follows :

2 mm track head (pilot / time code version)	±3 dB
2.75 mm track head (non–pilot version)	±2.5 dB

When all adjustments of the frequency response have been effected, it is important to check the playback level once more, as they may have had an effect upon it (R10 and R60).

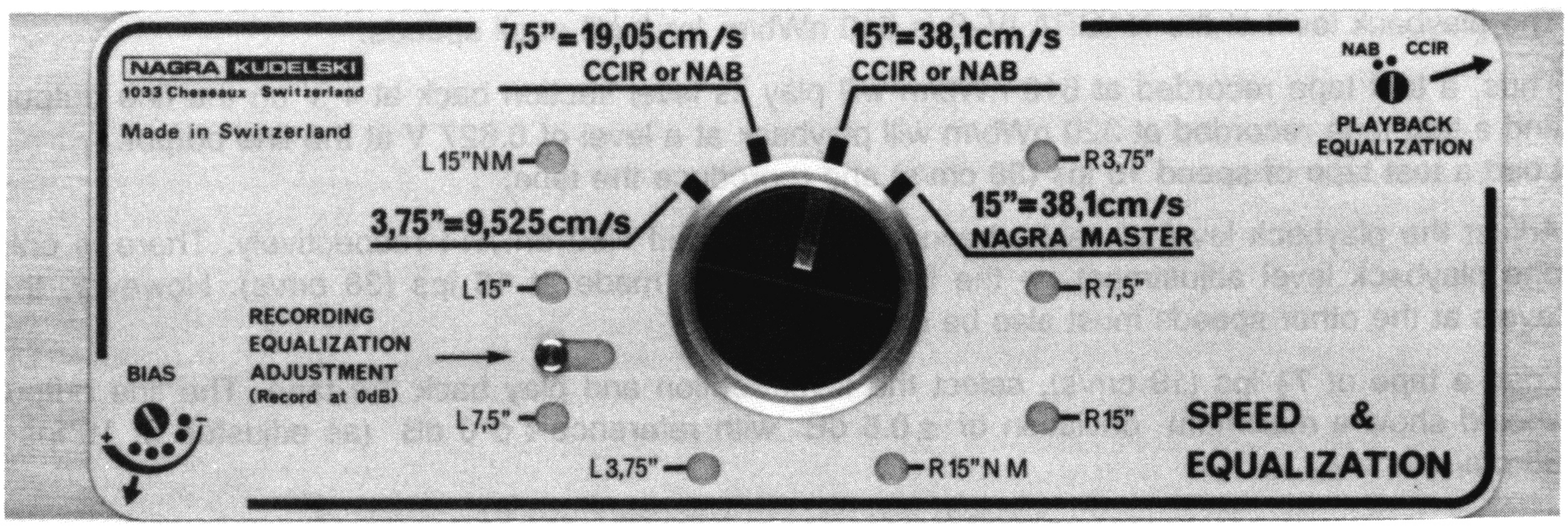

1.5 RECORDING CHAIN

NOTE: All playback calibrations must be carried out before the record calibrations are started, otherwise the record adjustments will not be correct.

PRESETS:

- Set MONO / ST. HS / STEREO switch (11) to STEREO position
- Set MIKES / LINE switch (9) to LINE position
- Set NRS / NORMAL switch (10) to NORMAL position
- Set FILTERS switch (13) to FLAT position
- Set Meter Selector switch (12) to LEVEL position
- LINE & PHONES switch (1) will remain in TAPE position, unless stated otherwise.

TAPE

Thread the tape that is to be used for calibration onto the machine. (i.e. the customer's particular tape).

RECORD HEAD AZIMUTH

Supply a 12 kHz signal to the input of each channel and adjust the input level so that the modulometer indicate –20 dB. Switch the machine to RECORD NO LIMITER at 7½ ips (19 cm/s) speed. Connect an AC voltmeter and a dual trace oscilloscope (in chop mode) to the line outputs and align the azimuth of the record head for maximum output level. Find the max. peak level for one channel and note the value. Now find the max. output level for the other channel. The amplitude deviation between the two channels should not exceed 2 dB, otherwise replace the record head. When this has been done, then finely adjust the azimuth so as to bring the two signals into phase. The phase shift should not exceed 20 degrees.

Check the adjustment by pressing the head on both sides – refer to the playback head adjustment procedure, page III 1.4–1.

BIAS

BIAS FREQUENCY

Using a frequency meter, measure the frequency between point 2 on A16 board (erase head) and the ground, with the machine in RECORD mode. The bias frequency should read :
125 kHz ±5 kHz
If this is not the case, then it can be adjusted by means of capacitor C 210 on A16.

BIAS LEVEL

Remove recording amplifier and bias oscillator board A16. Install the bias oscillator extender board, of the set of extenders, P/N 71 91 501 000. Then install board A16 on this extender.
Connect an external DC power supply to the extender board using the cable supplied, and set the power supply to –10 V. When the cable is connected to the extender, the bias oscillator is powered by the external supply. When it is disconnected, the internal –10 V power is supplied to the bias oscillator.
Check the type of bias transformer (A18) on bias oscillator circuit A16 according to the following :

823 (P/N 92 06 823 000)	is suitable for pilot and time code versions, with narrow 2.0 mm tracks
824 (P/N 92 06 824 000)	is suitable for non pilot versions, with wide 2.75 mm tracks.

If the transformer is to be replaced, repeat the bias frequency check and, if necessary, make the required adjustments.

Set BIAS selector switch (21) on the tape deck to position 3. On bias oscillator board A16, install two jumpers located close to the bias transformer in the middle position, as shown on the schematics.
Connect an AC voltmeter to the line output, and set Lines & Phones TAPE / DIRECT switch to TAPE position.

A. CCIR machines

Factory calibration tape	AGFA PEM 468
Tape speed	15 ips (38 cm/s)
Overbias coefficient	K = 1.05
Recorded signal	1 kHz at –10 dB

Supply a 1 kHz signal at –10 dB level on the modulometer to both line inputs. Select position TEST on the main function selector and note the line output level on the AC voltmeter. Select RECORD NO LIMITER mode at 15 ips (38 cm/s) standard speed. Vary the power supply voltage to the bias oscillator within the range from –5 to –15 V using the external DC power supply and monitor the line output of the left channel. Locate the maximum amplitude point and adjust the left channel volume control potentiometer to obtain –10 dB on the line output (as noted initially). Take this as reference.
Decrease the bias voltage (by decreasing the external power supply voltage) to obtain a –1 dB level drop on the line output. Note the corresponding bias voltage Vb 1, measured with an AC voltmeter connected between pin 4 on the A16 board and the ground.

NOTE: The bias frequency is 125 kHz and the voltmeter should have a linear response at least in this frequency range.

Now increase the bias voltage, and observe when the output amplitude reaches maximum level, then continue to increase the bias voltage to obtain again a –1 dB drop. Note the corresponding bias voltage Vb2. Calculate the optimum bias voltage for the left channel as follows:

$$Vb = K \cdot \sqrt{2}\ Vb1 \cdot Vb2$$

$$K = 1.05$$

Repeat the above steps for the right channel, measuring the bias voltage between pin 5 on the A16 board and the ground.
The extender board is provided with test pins for bias voltage measurements.
Deviation between the bias voltages for the left and right channels should not exceed 5%, otherwise replace the record head.

Remove the extender board and install bias oscillator board A16 directly in the tape deck. Switch the machine to RECORD NO LIMITER mode and find with bias selector switch (21) the bias voltage closest to the calculated optimum voltage Vb.
With the lower jumper on the A16 board (0 V +0.34 V – 0.34 V) correct the bias voltage supplied to the right channel (pin 5), to find the nearest possible value to the calculated one.
With the upper jumper on the A16 board (7.46 V, 7.8 V, 8.14 V) correct the bias voltage supplied to the left channel (pin 4), to find the nearest possible value to the calculated one.
Deviations between adjusted bias voltages and calculated optimum values should not exceed approx. 200 mV.
Note the position of the BIAS selector switch for your reference.

B. NAB machines

Factory calibration tape	SCOTCH 3M808
Tape speed	15 ips (38 cm/s)
Overbias	–2 dB
Recorded signal	15 kHz at –10 dB

Supply a 15 kHz signal at –10 dB level on the modulometer to both line inputs. Select position TEST on the main function selector and note the line output level on the AC voltmeter. Select RECORD NO LIMITER mode at 15 ips (38 cm/s) standard speed. Vary the power supply voltage to the bias oscillator within the range from –5 to –15 V using the external DC power supply and observe the line output of the left channel. Localize the maximum amplitude and adjust the left channel volume control potentiometer to obtain a –10 dB level on the line output (as noted initially). Take this as reference.
Increase the bias voltage, i.e. overbias (by increasing the external power supply voltage) until a –2 dB level drop on the line output is obtained. Note the corresponding bias voltage Vb (left), measured with an AC voltmeter connected between pin 4 on the A16 board and the ground.

NOTE: The bias frequency is 125 kHz and the voltmeter should have a linear response at least in this frequency range.

Repeat the above for the right channel and finally set the bias voltages on the A16 board, as explained above (for CCIR machines).

Two different methods of bias voltage adjustments are presented.
Any method can be used to find the bias voltage for the above tapes as well as for different tapes. The overbias coefficient for a 1 kHz signal or overbias with respect to the line output level should be read off or calculated from given tape specification curves supplied by tape manufacturers. A bias voltage corresponding to the minimum value of harmonic distortion, or a compromise between maximum output level and minimum harmonic distortion are taken as optimum bias level.

RECORDING

LEVEL PRESET

Feed a 1 kHz signal to the line inputs. Select the TEST position on the main function selector and adjust the two level control potentiometers to read +4 dB (MPL) on both needles of the modulometer. Switch the machine to RECORD NO LIMITER and adjust potentiometers R54 / R154 on A15 recording preamplifier to obtain on the line outputs the same level (no deviation) when switching the line & phones switch from TAPE to DIRECT.

FREQUENCY RESPONSE

Clean the heads with ethyl alcohol. Before every frequency response adjustment, make sure that the head surfaces are perfectly clean and dry.

The following tapes are used at the Factory for adjustments:

Speed	Tapes	
	CCIR	**NAB**
15 ips (38 cm/s) Master	AGFA PEM 468	SCOTCH 3M226
15 ips (38 cm/s) Standard	AGFA PEM 468	SCOTCH 3M808
7½ ips (19 cm/s)	AGFA PEM 468	SCOTCH 3M808
3¾ ips (9.5 cm/s)	AGFA PEM 369	SCOTCH 3M808

Thread the tape, according to the machine version, speed and equalization standard.
Supply to the line inputs a signal from the audio generator, at –20 dB level as indicated on the modulometer.

Select RECORD NO LIMITER and set the reference frequency on the audio generator. The reference frequency depends on the speed, as listed below. Connect an AC Voltmeter to the line output and use the off–tape voltage as a reference (make sure that the line & phones switch remains in TAPE position).

Adjust the equalization potentiometers for both left and right channels on A15 recording preamplifier board, as listed below, to obtain frequency response curves within specified tolerances.

Start by adjusting the equalization potentiometer for a –0.5 dB level drop, as related to the reference level, at the high frequency limit of the frequency range (20 kHz for 15 ips / 38 cm/s) – this should give a smooth frequency response. Sweep the frequency in the specified range and if necessary, correct the response in the high frequency range to obtain the best symmetry around the reference level.

There is no correction in the low frequency range. Should the response exceed the tolerances, check the fixed components values or replace the record head.

Tolerances listed below apply for both CCIR and NAB standards.

RECORD / PLAYBACK FREQUENCY RESPONSE

Speed	Ref freq.	Frequency range	Tolerance	Adj. pot
15" M	1 kHz	30 Hz to 20 kHz	±2 dB	R18 / R118
15" S	1 kHz	30 Hz to 20 kHz	±2 dB	R17 / R117
7½"	500 Hz	30 Hz to 15 kHz	±2 dB	R16 / R116
3¾"	500 Hz	40 Hz to 8 kHz	±3 dB	R15 / R115

ANTIDISTORTION

Demagnetize the heads, then supply the line inputs with a 1 kHz signal. Select position TEST on the main function selector and adjust the input level to MPL (Maximum Peak Level), i.e. 0 dB +4 dB. You should read on the line output 1.585 V RMS and +4 dB on the modulometer scale, making sure that the LINE & PHONES switch is in TAPE position.

Select 15 ips (38 cm/s), standard equalization and speed, and thread the appropriate tape.

Connect an AC voltmeter to the line output and, in parallel, selective 1/3 octave filters with a sensitive AC voltmeter.

Select RECORD NO LIMITER and adjust R5 / R55 potentiometer on A16 board to obtain the minimum value of third harmonic distortion H3. This will be measured using a 3.15 kHz (value on Brüel & Kjaer instrument) selective filter. Check the line output level, it should remain all the time at 1.585 V. Adjust the level with R54 / R154 on A15, for left and right channels respectively, then by changing the position of the line & phones switch from TAPE to DIRECT, check that there is no level deviation. These two adjustments are interactive and should be carried out consecutively until both minimum H3 value and MPL on the line output are achieved.

Check harmonic distortion levels:

H2 (2 kHz on filter)	< = 0.5 %
H3 (3.15 kHz on filter)	< = 1.5 %

LIMITER

Supply a 1 kHz signal to the two line inputs. Select TEST position on the main function selector and adjust the input level to MPL (Maximum Peak Level), i.e. 0 dB +4 dB. On the line output there should be a voltage of 1.585 V RMS and +4 dB on the modulometer scale. Make sure that the line & phones switch is in TAPE position.
Select 15 ips (38 cm/s), standard equalization speed and thread the appropriate tape.
Switch the IV-S alternately between RECORD and RECORD NO LIMITER while monitoring the line output, left and right channels, on the AC voltmeter. The deviation should not exceed 1 dB.

Decrease the line input level to 0 dB on the modulometer and 1 V on the line output, in TEST mode. Increase the input voltage by 10 dB. Switch the machine to RECORD with limiter and check the line output level: it should read 1.585 V ±1 dB. Make sure that the line & phones switch is in TAPE position.
Check the signal waveform on the oscilloscope: it should be clean.
The limiter threshold level is factory adjusted. Should the given tolerances be exceeded, you may adjust R45 / R145 on A15 board.

RECORDING LEVEL

The recording levels on Nagra IV-Stereo machines are:

Speed	Recording level	MPL (CCIR)	MPL (NAB)
15 ips (15 cm/s) Master	510 nWb/m	+ 4 dB	+ 4 dB
15 ips (15 cm/s) Standard	510 nWb/m	+ 4 dB	+ 2 dB
7½ ips (19 cm/s)	405 nWb/m	+ 4 dB	+ 2 dB
3¾ ips (9.5 cm/s)	320 nWb/m	+ 4 dB	+ 2 dB

The above recording levels are preset with fixed components on recording preamplifier board A15.
Check the recording level as follows:

With a 1 kHz signal on the line inputs, adjust in TEST position the level control potentiometers to read 1.00 V on the line outputs (0 dB on the modulometer). Switch the machine to RECORD and check that there is no level deviation on the line outputs while switching the LINE & PHONES switch from TAPE to DIRECT. If necessary, finely adjust R54 / R154 potentiometers on recording preamplifier board A15.

CROSSTALK

Set both level control potentiometers fully CW (max).
Connect an audio generator to the right channel input only.
Short circuit the left channel input to ground.
Adjust the input level at 0 dB, 1 V on the right channel output.
Set 15 ips (38 cm/s), standard equalization speed.
Select RECORD and set the audio generator at the frequencies listed below. Monitor the left channel output using an AC voltmeter and selective filter, set to the recorded frequency. Check that crosstalk is found within the following tolerances:

Level	Frequency	Tolerance
0 dB	125 Hz	> = 40 dB
0 dB	1 kHz	> = 50 dB
−10 dB	10 kHz	> = 40 dB

NOTE: Change the level to −10 dB for a 10 kHz frequency.

Repeat the above for the other channel.
If necessary, adjust R201 on A16.

1.6 ERASING

Supply a 1.25 kHz signal at MPL to both line inputs, which relates to 1.585 V on the line outputs.

Select 15 ips (38 cm/s), standard speed.

Record this signal on the tape (approximately 1 min).

Rewind the tape.

Disconnect the input signal and select RECORD.

Monitor the residual value of the recorded frequency, with the selective filter set to 1.25 kHz. It should read < = –80 dB, with reference to MPL.

TACHOMETRIC AND BIAS RESIDUE

Select the 7½ ips (19 cm/s) speed and in PLAYBACK, without tape on the machine, monitor the 2 kHz tachometric frequency on the line outputs with the selective filter.

Check that the residue is < = –83 dB with ref. to MPL (0 dB +4 dB).

It should be adjusted to the minimum (see page III 1.2–1).

Select 15 ips (38 cm/s) standard speed, thread the tape.
Select RECORD and disengage the pinch roller with pinch wheel support (No 1 on drawing 8) to stop the tape. Do not turn main control lever (38) as it will switch off the bias oscillator.
Monitor the bias residue on the line outputs with a 125 kHz filter, it should be

V out < = –65 dB.

1.7 PILOT CHAIN

NOTE: All mechanical adjustments must be effected before the pilot calibrations are started, otherwise the pilot adjustments will not be correct.

Presets

- Set both volume control potentiometers (6 and 7) fully CCW (min)
- Set line & phones switch (1) to TAPE position
- Set MONO / ST. HS STEREO switch (11) to STEREO
- Set MIKES / LINE switch (9) to LINE
- Set NRS / NORMAL switch (10) to NORMAL position
- Set FILTERS switch (13) to FLAT position
- Set the recorder speed to 7½ ips (19 cm/s)

Tape

Thread to the machine the tape which will be used for calibrations.

NOTE: These calibrations apply to pilot and cue board A24 with +12 V supply, version "G" or "H", No 91 06 774 000. The circuit version letter is found on the board, in a circle close to the circuit number.

PILOT HEAD AZIMUTH

Thread the azimuth test tape (Kudelski test tape BA-19, No 91735), or frequency test tape 7½ ips (19 cm/s).

Connect the 1/3 octave filter set to 10 kHz and the AC voltmeter to the collector of transistor Q1 on pilot board A24.

Reproduce the test tape and adjust the pilot head azimuth, rotating the toothed pinion in front of the head, to obtain maximum signal amplitude.

CALIBRATIONS WITH STATIONARY TAPE

For the following adjustments, select TEST and activate the FM modulation, which is done by coupling pins 2 and 5 of CUE socket (47) on the right side panel. It supplies −10 V to −10 V FM (pin 11 on A24).

CARRIER FREQUENCY

Without input signal, measure the carrier centre frequency at TP3. Adjust potentiometer R26 to read

$$Fo = 13.5\ \text{kHz} \pm 1\%$$

CUE OUTPUT

Without input signal, adjust potentiometer R39 to obtain the CUE DC output level on pin 6 of CUE socket

$$\text{CUE out} = 0\ \text{V} \pm 40\ \text{mV DC}$$

Supply a 400 Hz signal at 1.41 V RMS level to the cue input, pin 1 of the CUE socket.
Adjust resistor R 37 to obtain on the cue output, pin 6 of CUE socket

$$\text{CUE out} = 1.41\ \text{V RMS} \pm 0.5\ \text{dB}$$

PILOT LEVEL

Supply a 400 Hz signal at 2 V RMS level to the pilot input, pin 4 of PILOT socket (44), and then adjust resistor R42 to obtain on the pilot output, pin 3 of the CUE socket

PILOT out = 2 V RMS ± 1 dB

Increase the pilot input level while monitoring the pilot output with the AC voltmeter and oscilloscope. Check that saturation level is

Vs > = 2.25 V RMS

Adjust the pilot input level to obtain on the pilot output 2 V RMS.
Sweep the frequency and check that the pilot output level remains within a ± 3 dB deviation in the frequency range

30 Hz to > = 2.5 kHz

MODULOMETER

Set modulometer selector switch (12) to TC / PILOT PLAYBACK.
Without any signal on the input, adjust resistor R58 to obtain 0% to 100% scale (green needle) on the modulometer.

0% ± needle width

Supply a 400 Hz signal to the pilot input (pin 4 of PILOT socket) and adjust the level to obtain 2 V RMS level on the pilot output (pin 3 of the CUE socket).
Adjust resistor R57 to obtain on the modulometer 0% to 100% scale

100% ± 2.5%

ALARM

Set modulometer selector switch (12) to PILOT FREQ.
Make sure that frequency meter board A25 (QFMS) is installed on the pilot board.
Supply 50 or 60 Hz (depending on the QFMS frequency), 1 V RMS signal to the pilot input.
Adjust potentiometer R28 on A25 to read "0" on the modulometer frequency scale.
Vary the frequency of the signal in a ± 5% range and adjust R31 on A25 so that the modulometer reads

± 5% (± 0,5%)

Check that the TC / PILOT rotating alarm indicator shows black at a frequency shift of

± 5% (± 0.5%)

Decrease the pilot input level to zero and slowly increase the level. Check that the TC / PILOT alarm indicator shows white at an input level of

PILOT in < = 0.5 V RMS

CLAPPER

Supply a DC voltage to the clapper input, pin 2 of PILOT socket (44). Observe the signal polarity: " + " to pin 2, "–" to the ground.
Set meter selector switch (12) to LEVEL and check that the clapper signal appears as indicated at approx. a –8 dB level on the modulometer scale, at clapper input voltage

CLAPPER in = 5 V ± 20%

RECORD AND PLAYBACK

Supply a 400 Hz signal to the pilot input (pin 4 of the PILOT socket) and adjust the level to obtain 2 V RMS on the pilot output (pin 3 of the CUE socket).
Do not activate the FM modulator by means of two pins in the CUE socket.
Select the RECORD function, to record this signal on the tape, for 30 sec.
Activate the FM Modulator (connect pins 2 and 5 of CUE socket) and select PLAYBACK, for another 30 sec. This will also record a pilot signal on the tape.
Rewind the recorded section of tape.
Reproduce the tape, without activating the FM modulator, and adjust resistor R61 to obtain on the pilot output, for both recorded sections of tape

PILOT out = 2 V RMS ± 0.5 dB

Select RECORD without activating the FM modulator, and decrease the pilot input level. Check that –10 V FM is switched OFF at pilot input level

PILOT in < = 0.5 V RMS

CROSSTALK BETWEEN PILOT AND AUDIO TRACKS

Select RECORD, without input signal.
Activate the FM modulator, and close the shielding of the pilot and audio reproduce heads.
Connect the selective filter to the audio line output, set to 12.5 kHz, and also an AC voltmeter.
Monitor on both channels, the residue of 13.5 kHz carrier frequency

Vc < –46 dB (ref. 1 V)

PILOT NOISE LEVEL ON THE AUDIO TRACKS

Supply a 50 Hz or 60 Hz signal from the audio generator to the pilot input (pin 4 of the PILOT socket) and adjust the level to obtain 2 V RMS on the pilot output (pin 3 of the CUE socket).

Select 15 ips (38 cm/s) in RECORD mode. Record a pilot signal on the tape, for approx. 30 sec.

Disconnect the pilot input signal, activate the FM modulator (connect pins 2 and 5 of the CUE socket) and select PLAYBACK to record another 30 sec of tape, without signal.

Rewind the recorded sections of the tape. Connect the selective filter and AC voltmeter to the audio line output, set the filter to 50 Hz (or 60 Hz) and measure for both channels the level shift between the two recorded sections:

it should not exceed 0.5 dB

ERASING BY RECORDING A CARRIER FREQUENCY

Supply a 400 Hz signal to the pilot input (pin 4 of the PILOT socket) and adjust the level to obtain 2 V RMS on the pilot output (pin 3 of the CUE socket).
Do not activate the FM modulator by means of two pins in the CUE socket.
Select 7½ ips (19 cm/s) and switch the machine to RECORD, and record this signal on the tape for approximately 30 sec.
Rewind the recorded section of tape.
Disconnect the signal on the pilot input.
Activate the FM modulator and select the PLAYBACK mode. The carrier frequency will erase previously recorded signals.
To control the erasing efficiency, rewind this section of tape, deactivate the FM modulator, select the PLAYBACK mode and measure the 400 Hz residue on the pilot output, it should read

V out < = –26 dB (ref. 2 V RMS)

COMMENTARY MICROPHONE

Connect the QSCM–2 commentary microphone, record an audio signal, rewind and reproduce.
Check the reproduced signal with headphones: PHONES selector switch (19) in CUE position.

1.8 TIME CODE CHAIN

NOTE: All mechanical adjustments must be carried out before the time code calibrations are started, otherwise the time code adjustments will not be correct.

Tape

Thread to the machine the tape which will be used for calibrations.

TC HEAD HEIGHT

Reproduce at 7½ ips (19 cm/s) a head height section of the time code test tape. A signal of 1 kHz is recorded on the full width of the tape, with the exception of a central track of 0.35 mm width, corresponding to the time code track.
Monitor the level on TP8 of time code playback amplifier A28 (1/4), or on the TC PLAY pin of the time code Lemo connector on the right–hand side panel of the recorder.
Adjust the time code head height by rotating the toothed azimuth pinion in front of the head, to obtain the minimum voltage on TP8

V out < = 100 mV RMS

Repeat the time code head squaring: refer to mechanical adjustments, page II 2.1–1.
If the correct time code height cannot be obtained, replace the height adjustment ("azimuth") disc underneath the head:

Part No	Thikness
01 04 255 014	1.1 mm
01 04 255 007	1.3 mm

Repeat the head height and squaring adjustments until correct results are obtained.

PLAYBACK LEVEL

Reproduce a test tape containing a 1 kHz signal recorded at 15 ips (38 cm/s) and at 320 nWb/m on the full tape width. It can be a Kudelski multifrequency test tape, level section.
Monitor the playback level on TP8 of TC playback amplifier A28 (1/4), or on the TC PLAY pin of the Lemo connector. Adjust resistor R8 on A28 (1/4) to read

(V out = 475 mV ±20 mV RMS

The typical value of resistor R8 is 22 kOhm.

NOTE: Unsolder and remove R8 (SMD chip resistor). Find the optimum value of R8 using a normal 1/8 W wire ended resistor soldered to the soldering pins provided next to this resistor. When the correct value has been found, then select the correct SMD version of this value and insert it as before. This also applies to other adjustments of this kind.

Reproduce at 15 ips (38 cm/s) a time code test tape, TC level section, containing a time code signal recorded on a TC central track at nominal 707 nWb/m pp level.
Monitor with an oscilloscope the playback level at TP8 on A28 (1/4) or on the TC PLAY pin of the Lemo connector. It should read, around –5 V level

V out = 3 V pp ±0.2 V

Set modulometer selector switch (12) to TC / PILOT PLAYBACK and adjust resistor R32 (typical value 680 Ohm) to read on the modulometer scale 50% ±5%.

BIAS VOLTAGE

Record time code sequences, changing the position of jumpers S1, S2, S3 and S4 of the time code bias transformer as shown below:

Jumper position	Wiring ratio
S2 and S3	1: 1.33
S2 and S4	1: 1.19
S1 and S3	1: 1.07
S1 and S4	1: 0.95

These jumpers are surface mounted resistor like components having a value of 0 Ohm.
Reproduce the recorded section of tape and monitor the time code level on TP8 or on the TC PLAY output.
Select jumper positions giving maximum time code level.

RECORDING LEVEL

Record and then reproduce a time code signal. Monitor the playback level on TP8 or the TC PLAY output.
Adjust resistor R4 on recording amplifier A28 (1/4) to obtain the same amplitude as during the playback calibration

$$V\ play = 3\ V\ pp \pm 0.2\ V$$

TC COMPARATOR

Reproduce a tape with time code.
Monitor the off tape time code signals on the comparator outputs, pin 1 and pin 7 of UB1, on board A28 (1/4).
Adjust the comparator threshold level with potentiometer RP1 to obtain a 50% duty cycle.

COMMON MODE REJECTION

Supply a 10 kHz signal of 10 V RMS amplitude simultaneously to both symmetrical time code inputs on the Lemo socket and to the ground.
Measure the signal attenuation at the amplifier output, pin 1 of UF3, it should read

$$V\ (pin\ 1/UF3) <= -30\ dB$$

INPUT LEVEL THRESHOLD

Supply a 1 kHz signal of approx. 1V pp amplitude to one of the inputs.
Slowly decrease the input signal amplitude and check that a square wave signal at the comparator output, pin 7 of UF3, disappears at an input voltage:

$$V\ in <= 0.5\ V\ pp$$

ALARM INDICATOR

Record a time code signal on a tape, at 7½ ips (19 cm/s).
Observe the TC / PILOT rotating alarm indicator, it should show a white segment. Rewind the tape and reproduce the time code recorded, the rotating indicator should show a white segment.
Reproduce a tape without time code recorded on it, the alarm indicator should show black.

CROSSTALK

Reproduce a tape containing a time code recorded at 15 ips (38 cm/s). Monitor on the line outputs, using 1/3 octave filters, 1 kHz and 2 kHz time code frequency residues. These levels should remain, with reference to MPL (1.585 V) below or equal to –88 dB, or at the tape noise level if it is greater than –88 dB (MPL).

V out (1 kHz) < = –88 dB
V out (2 kHz) < = –88 dB

PLAYBACK AT HALF SPEED

Reproduce at 7½ ips (19 cm/s) a tape with time code recorded at 15 ips (38 cm/s).
Check that the time code is correctly displayed on the keyboard display.

1.9 MULTIFREQUENCY TEST TAPES

Used for playback chain calibration, the multifrequency test tapes are characterized by the simultaneous presence of all frequencies indicated, whereas ordinary test tapes deliver them sequentially. They make it possible to very quickly obtain the frequency response by simple switching of the filters.

A reference signal is used to enslave the recording process and thus guarantee an excellent level stability.

This test tapes must be used with a set of 1/3 octave filters and a voltmeter (e.g. Brüel & Kjaer 1614 / 1615 and 2606 / 2608).

They are available for speeds of 15, 7½ and 3¾ ips. (6.35 mm, 1/4" tape) IEC or NAB norm.

91700 BM–IEC	Set of 3 multifrequency test tapes (15, 7½, 3¾ ips) IEC standard
91701 BM–NAB	Set of 3 multifrequency test tapes (15, 7½, 3¾ ips) NAB standard

The IEC and NAB multifrequency test tapes are also available separately:

91710	BMIN–9 IEC and NAB 9.5 cm/s	3¾ ips
91711	BMI–19	IEC 19.05 cm/s
91712	BMI–38	IEC 38.10 cm/s
91716	BMN–7	NAB 7½ ips
91717	BMN–15	NAB 15 ips

COMPOSITION OF TEST TAPES

a. Reference level section, 320 nWb/m, duration 30 seconds

15 ips	38.10 cm/s	1000 Hz
7½ ips	19.05 cm/s	500 Hz
3¾ ips	9.5 cm/s	375 Hz

b. Multifrequency section, duration 5 min 30 seconds

Corresponding 1/3 octave filter	15 ips	7½ ips	3¾ ips
25 Hz	23.5 Hz	23.5 Hz	23.5 Hz
31.5 Hz	31.25 Hz	31.25 Hz	31.25 Hz
50 Hz	46.87 Hz	46.87 Hz	46.87 Hz
63 Hz	62.5 Hz	62.5 Hz	62.5 Hz
125 Hz	125 Hz	125 Hz	125 Hz
500 Hz	500 Hz	250 Hz	250 Hz
1 kHz	1 kHz	500 Hz	375 Hz
4 kHz	4 kHz	1 kHz	1 kHz
8 kHz	8 kHz	4 kHz	2 kHz
10 kHz	10 kHz	6 kHz	4 kHz
12.5 kHz	12 kHz	10 kHz	6 kHz
16 kHz	16 kHz	12 kHz	8 kHz
20 kHz	20 kHz	16 kHz	10 kHz
25 kHz	24 kHz	20 kHz	
31.5 kHz	32 kHz		

Instructions

1 Carefully demagnetize and clean the playback head.
2. Calibrate the payback chain by means of the first section of the tape.
3. Adjust the playback head azimuth by means of a proper adjustment tape or of a high frequency section of the multifrequency tape. When using the multifrequency tape, start at a medium frequency and gradually increase it for finer adjustment.
4. Frequency response measurement:
   Connect a 1/3 octave filter set and a voltmeter to the line output. Successively switch in the various filters so as to separate each frequency and establish the frequency response.

CAUTION: Guard multifrequency test tapes against heat and magnetic fields and take care not to erase them accidentally.

MULTIFREQUENCY TEST TAPES

SPECIFICATIONS

1. Playback reference level 320 nWb/m
2. Playback level of the various frequencies:

   –24 dB with reference to 320 nWb/m, or 20 nWb/m

Level stability

	7½ and 15 ips	**3¾ ips**
from 20 Hz to 5 kHz	±0.2 dB	±0.3 dB
above 6 kHz	±0.3 dB	±0.5 dB

Drop out:
(signal out of tolerance for more than 1 sec.)

Upper limits: max. 1 drop–out per section,
max. duration 5 seconds

Tape length: (duration about 6 min)

15 ips	38.10 cm/s	140 m
7½ ips	19.05 cm/s	70 m
3¾ ips	9.5 cm/s	35 m

Recording standard

Time constant deemphasis

IES		**NAB**	
38.10 cm/s	35 µs	15 ips	3180/50 µs
19.05 cm/s	70 µs	7½ ips	3180/50 µs
9.5 cm/s	3180/90 µs	3¾ ips	3180/90 µs

NOTE: The fringing effect must be taken into account.
This effect is due to the playback of a full–track tape with a half–track playback head. In fact the fringing effect corresponds to an increase of the bass response curve (between 30 Hz and 100 Hz) of about 0.5 dB for a 2.75 mm track width and about 1 dB for a 2 mm track width.

1.10 AZIMUTH TEST TAPE

This tape greatly simplifies playback head azimuth adjustment of the IV–S, IV–SJ, TI and TA recorders. It bears two frequencies (1 kHz and 10 kHz) recorded in superposition, allowing adjustment by phasing of both channels.

ORDER No

91735 BA–19 Azimuth test tape 7½ ips

CHARACTERISTICS

Speed	19 cm/s (7½ ips) CCIR (also usable with NAB standard)
Frequency	1 kHz and 10 kHz signals in superposition
Level	320 nWb/m – 24 dB = 20 nWb/m for each signal
Duration	6 minutes, 70 meters (210 ft.) of tape

INSTRUCTIONS

1. Carefully demagnetize and clean the playback head.
2. Connect a dual trace oscilloscope to both right and left line outputs of the recorder.

   Play the tape at 7½ ips and synchronize the oscilloscope with one of the traces.

   a. Adjust the playback head azimuth screw to bring both 1 kHz signals into phase.
   b. Then do your adjustment more accurately by bringing both 10 kHz signals into phase.

REMARK: The first adjustment using the 1 kHz frequency avoids a possible azimuth error due to a 360° phase deviation at 10 kHz.

CAUTION: Guard test tapes against heat and magnetic fields and take care not to erase them accidentally.

1.11 CIRCUIT ADJUSTMENTS

A1-S	CIRCUIT ADJUSTMENT. POINTS - BOX (PILOT VERSION)
A2-S	CIRCUIT ADJUSTMENT. POINTS - BOX (TC VERSION)
A2'-S	DETAILS OF A2-S CIRCUIT ADJUSTMENT. POINTS - BOX (TC VERSION)
A3-S	CIRCUIT ADJUSTMENT. POINTS - TAPE DECK

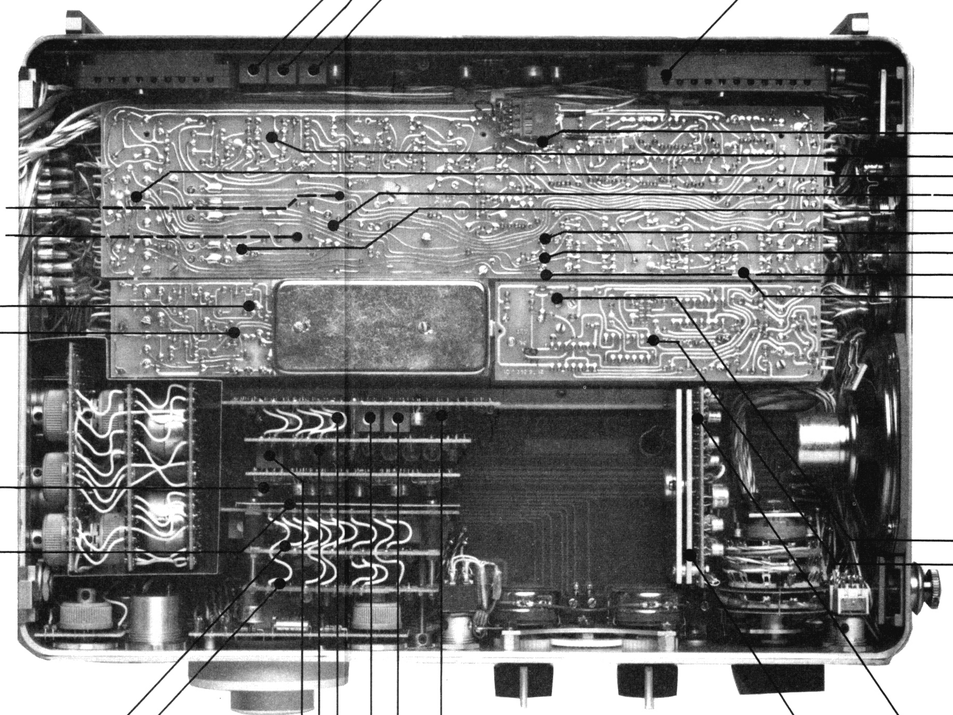

A22

VOLTAGE AND SPEED STABILIZER
91 04 765 100

15" SPEED ADJUSTMENT R35
3 3/4" SPEED ADJUSTMENT R39
7 1/2" SPEED ADJUSTMENT R24
-10 V STAB. ADJUSTMENT R88 / R89

A24

PILOT AND CUE
91 06 774 000

PILOT SIGNAL RECORD ADJUSTMENT R61
CUE DC OUTPUT ADJUSTMENT (without signal) R17
MODULATOR Fo ADJUSTMENT R26
DEMODULATOR Fo ADJUSTMENT R37
DC OUTPUT LEVEL ADJUSTMENT R39
PILOT LEVEL INDICATOR 0% ADJUST. R 58
PILOT LEVEL INDICATOR 100% ADJUST. R 57
PHONES IMPEDANCE ADJUSTMENT R52
PILOT OUTPUT LEVEL ADJUSTMENT R42

A25

FREQUENCY METER

06 780 (50 Hz)
06 781 (60 Hz)
BRIDGE SELECTION 50 Hz-60 Hz
FREQUENCY ADJUSTMENT R28

A12

MICROPHONE POWER SUPPLY
91 06 760 100

+ 12 V ADJUSTMENT R25 / R24
+ 48 V ADJUSTMENT R4

A10

LINE AND PHONES AMPLIFIER
91 06 745 000

GAIN ADJUSTMENT R9/ R59

A6

REFERENCE OSCILLATOR

REFERENCE SIGNAL ADJUSTMENT R210

A26

CRYSTAL PILOT GENERATOR
06 697

FREQUENCY ADJUSTMENT C5
FREQUENCY SELECTION 50 Hz-60 Hz

A5

DIRECT AMPLIFIER (LEFT)

REFERENCE SIGNAL LEVEL ADJUSTMENT R13
GAIN ADJUSTMENT R7 / R8

A11

LOUDSPEAKER AMPLIFIER
91 06 750 000

STAND-BY CURRENT ADJUSTMENT R7
STABILIZED VOLTAGE ADJUSTMENT R15

A4

DIRECT AMPLIFIER (RIGHT)

REFERENCE SIGNAL LEVEL ADJUSTMENT R13
GAIN ADJUSTMENT R7 / R8

A7

DIFFERENTIAL INDICATOR

100% ADJUSTMENT R26
0% ADJUSTMENT R16

A8

MODULOMETER

∞ ADJUSTMENT (RIGHT / LEFT) R56 / R6
0 dB ADJUSTMENT (LEFT) R18
MAX. LEVEL 0 dB ADJUSTMENT R201
0 dB ADJUSTMENT (RIGHT) R68

NAGRA IV-S	1.04.88
CIRCUIT ADJUSTMENT POINTS- BOX (PILOT VERSION)	A1-S

A22

VOLTAGE AND SPEED STABILIZER
91 04 765 100

15" SPEED ADJUSTMENT R35
3 3/4" SPEED ADJUSTMENT R39
7 1/2" SPEED ADJUSTMENT R24
-10 V STAB. ADJUSTMENT R88 / R89

A12

MICROPHONE POWER SUPPLY
91 06 760 100

+ 12 V ADJUSTMENT R25 / R24
+ 48 V ADJUSTMENT R4

A10

LINE AND PHONES AMPLIFIER
91 06 745 000

GAIN ADJUSTMENT R9 / R59

A6

REFERENCE OSCILLATOR

REFERENCE SIGNAL ADJUSTMENT R210

A5

DIRECT AMPLIFIER (LEFT)

REFERENCE SIGNAL LEVEL ADJUSTMENT R13
GAIN ADJUSTMENT R7 / R8

A4

DIRECT AMPLIFIER (RIGHT)

REFERENCE SIGNAL LEVEL ADJUSTMENT R13
GAIN ADJUSTMENT R7 / R8

A7

DIFFERENTIAL INDICATOR

100% ADJUSTMENT R26
0% ADJUSTMENT R16

A8

MODULOMETER

∞ ADJUSTMENT (RIGHT / LEFT) R56 / R6
0 dB ADJUSTMENT (LEFT) R18
MAX. LEVEL 0 dB ADJUSTMENT R201
0 dB ADJUSTMENT (RIGHT) R68

A11

LOUDSPEAKER AMPLIFIER
91 06 750 000

STAND-BY CURRENT ADJUSTMENT R7
STABILIZED VOLTAGE ADJUSTMENT R15

A28

TIME CODE KEYBOARD AND DISPLAY
91 06 561 000

NAGRA IV-S	1.04.88
CIRCUIT ADJUSTMENT POINTS- BOX (TC VERSION)	A2-S

COMMON MODE REJECTION AND
INPUT LEVEL THRESHOLD - TEST POINTS

TC PLAYBACK LEVEL ADJUSTMENT R8

TC RECORD LEVEL ADJUSTMENT R4

TC LEVEL INDICATOR 50% ADJ. R32

COMPARATOR THRESHOLD LEVEL
ADJUSTMENT, TEST POINTS

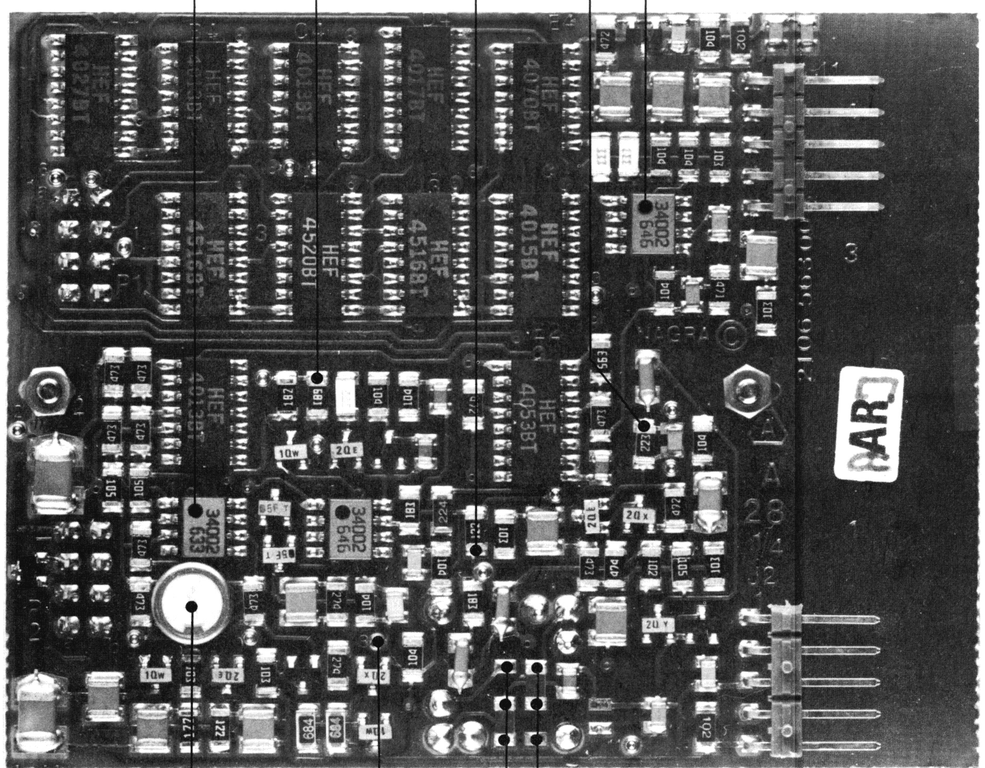

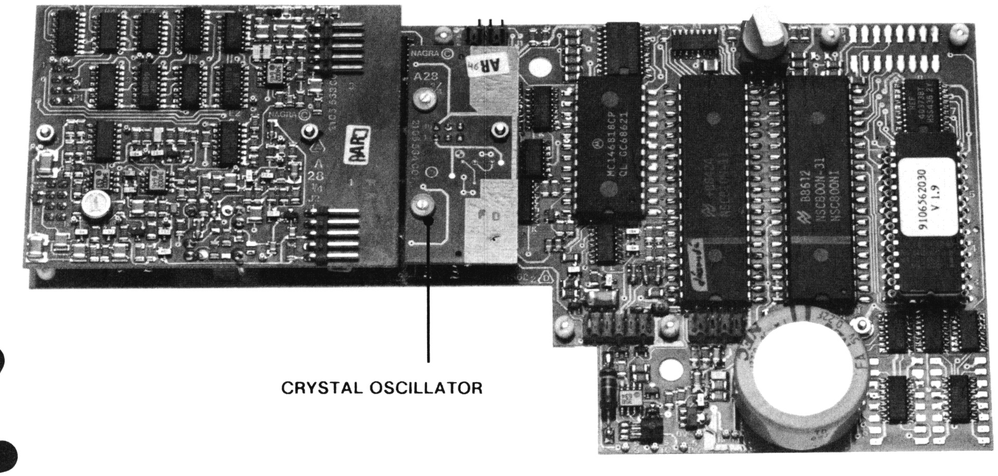

CRYSTAL OSCILLATOR

TC COMPARATOR THRESHOLD LEVEL
ADJUSTMENT RP1

TP 8

TC BIAS VOLTAGE ADJUSTMENT S1/S2/S3/S4

NAGRA IV-S	1.04.88
DETAIL OF A2-S CIRCUIT ADJUSTMENT POINTS - BOX (TC VERSION)	A2'-S

A15

RECORDING AMPLIFIER
91 06 811 100 (NAB)
91 06 812 100 (CCIR)

7 1/2" RECORDING EQUALIZATION ADJUSTMENT (RIGHT) R116
3 3/4" RECORDING EQUALIZATION ADJUSTMENT (RIGHT) R115
RECORDING LEVEL ADJUSTMENT (RIGHT) R154
15" RECORDING EQUALIZATION ADJUSTMENT (RIGHT) R117
15" MASTER RECORDING EQUALIZATION ADJUSTMENT (RIGHT) R118
3 3/4" RECORDING EQUALIZATION ADJUSTMENT (LEFT) R15
7 1/2" RECORDING EQUALIZATION ADJUSTMENT (LEFT) R16
15" MASTER RECORDING EQUALIZATION ADJUSTMENT (LEFT) R18
15" RECORDING EQUALIZATION ADJUSTMENT (LEFT) R17
RECORDING LEVEL ADJUSTMENT (LEFT) R54
LIMITER THRESHOLD ADJUSTMENT (RIGHT) R154
LIMITER THRESHOLD ADJUSTMENT (LEFT) R45

A14

PLAYBACK AMPLIFIER
91 06 805 000

HEAD LOSS CORRECTION ADJUSTMENT (RIGHT) R91
HEAD LOSS CORRECTION ADJUSTMENT (LEFT) R41
PLAYBACK LEVEL ADJUSTMENT (LEFT) R10
PLAYBACK LEVEL ADJUSTMENT (RIGHT) R60

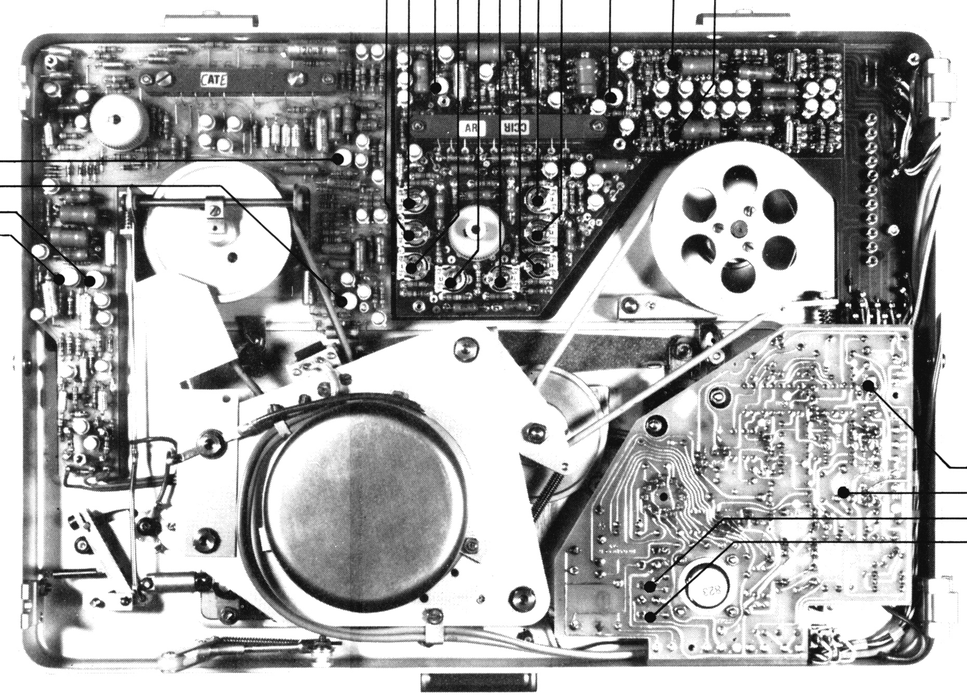

A16

BIAS OSCILLATOR WITH TRANSFORMER FOR PILOT VERSION (SMALL TRACKS)
91 06 814 000

BIAS OSCILLATOR WITH TRANSFORMER FOR STANDARD TRACKS VERSION (NON PILOT)
91 06 813 000

RIGHT CHANNEL H3 DISTORTION ADJUSTMENT R55
LEFT CHANNEL H3 DISTORTION ADJUSTMENT R5
BIAS STEP ADJUSTMENT, BRIDGE
BIAS STEP ADJUSTMENT, BRIDGE

NAGRA IV-S	1.04.88
CIRCUIT ADJUSTMENT POINTS - TAPE DECK	A3-S

TIME CODE & PILOT 4

CHAPTER IV "TIME CODE AND PILOT"

TABLE OF CONTENTS

Please refer to your instruction manual :

- Nagra IV-S TIME CODE — No 20 06 007 161

  Chapter 2 — page 2-1 to 2-28

May 1991

CHAPTER IV "TIME CODE AND PILOT"

TABLE OF CONTENTS

		Page No.
1.1	Introduction	IV 1.1–1
1.2	Mechanics	IV 1.2–1
1.3	Electronics	IV 1.3–1
1.4	Recording format	IV 1.4–1
1.5	Distance between heads	IV 1.5–1
2.1	Keyboard description	IV 2.1–1
2.2	Description of keys	IV 2.2–1 to 2.2–2
2.3	Display and beep	IV 2.3–1
2.4	Status display menu	IV 2.4–1 to 2.4–2
2.5	Numerical commands	IV 2.5–1 to 2.5–3
2.6	Errors and error codes	IV 2.6–1
2.7	Keyboard use	IV 2.7–1 to 2.7–2
3.1	Internal generator	IV 3.1–1
3.2	Selection of frame rate	IV 3.2–1
3.3	User bits setting	IV 3.3–1 to 3.3–2
3.4	Setting from external time code	IV 3.4–1
3.5	Signals available at the output	IV 3.5–1
3.6	Automatic set from external	IV 3.6–1
3.7	Using the IV–S TC with the AATON origin"C"	IV 3.7–1
4.1	Pilot	IV 4.1–1
4.2	Pilot compatibility	IV 4.2–1
4.3	F.M. pilot	IV 4.3–1
5.1	Using the IV–S TC	IV 5.1–1
5.2	How to record time code	IV 5.2–1
5.3	Synchronized recording	IV 5.3–1
5.4	Reading time code	IV 5.4–1
5.5	Use of IV–S TC in video	IV 5.5–1
5.6	Working with cable link with one or more cameras	IV 5.6–1
5.7	Time code in film	IV 5.7–1
5.8	The playback shoot	IV 5.8–1 to 5.8–2
5.9	Searching for a time code	IV 5.9–1
6.1	Power supply to the time code circuit	IV 6.1–1
7.1	Time code specifications	IV 7.1–1
8.1	Appendix "A" Drop frame	IV 8.1–1
9.1	Appendix "B" Software evolution	IV 9.1–1 to 9.1–3

1.1 INTRODUCTION

Ever since the development of video tape recording in 1956, the television industry has been seeking a method of labelling each and every frame.
The most efficient and practical way found for doing this was to use time code, which numerically numbers every frame, making the location of particular sequences and eventual accurate electronic editing possible.

The NAGRA IV-S TC has been developed in order to enable accurate post production and editing of audio, frame accurate to the video, and to ensure that accurate frame synchronization can be maintained during post production.

The official presentation of the time code version of the IV-S was made during the 1984 NAB exhibition in Las Vegas.
The IV-S TC is available in two mechanically identical versions:

NQS-TCC CCIR Equalization No 06007
NQS-TCN NAB Equalization No 06008

Both models include the relevant mechanics and electronics to record and replay the SMPTE / EBU 80 bits longitudinal centre track time code. All existing frame rates can be internally generated, because both machines include an internal time code generator.

This section of the manual only describes the operation and use of the time code and pilot systems of the IV-S; refer to other sections of this manual for all information regarding the audio electronics and mechanics of the IV-S.

The text below relates to machines fitted with software version 1.94 (if this is not the case, then contact your nearest NAGRA agent in order to have the software updated).

1.2 MECHANICS

The NAGRA IV–S TC is physically very similar to the IV–S (2 track stereo) and the IV–SL (centre track pilot) versions. A slim slide out keyboard with 11 keys is fitted beneath the recorder. It is used to check (via a 7 segment 8 digit LCD. DISPLAY) and set the time code and user bits, into the desired mode.

It may be moved out of sight during actual operation of the recorder, to allow free access to the audio controls. The time code record / replay head is mounted where the pilot head is on the IV–SL, between the audio record and audio replay heads. A 5 pin LEMO connector is added to the connector field on the right–hand side of the recorder to allow external time code inputs and outputs. Other signals are found on the PILOT and CUE connectors (see pages I 1.5–3 and I.1.5–4) on pins that are otherwise used for pilot operation.

For mechanical repairs to the time code machine see Chapter II of this manual.

FRONT PANEL

All control functions of the time code system with the exception of the frame rate selection are located on the keyboard. Two indications are, however, given by existing elements of the front panel. The first being the indication of "off tape" time code on the modulometer, the second being the indication on the rotary SASS indicator to show whether a signal is being fed to the time code head.

OPERATION OF THE MODULOMETER AND PILOT INDICATOR

The "PILOT FREQ" function linked up with the presence of the QFMS has no significance in the time code version. The TC / PILOT PLAYBACK function provides an indication of the level of playback time code signal. The green needle of the modulometer will be displaced to the 50% point at a speed of 38 cm/s (15 ips) and to about 40% at a speed of 19 cm/s (7 1/2 ips). During playback at a speed faster than nominal, the needle will indicate between 80 and 100% according to the apparent level read from the tape.

The rotary pilot / time code SASS type indicator functions as it does on a pilot machine and will thus show a white segment whenever it detects a time code signal coming from or going to the head.

1.3 ELECTRONICS

The audio electronics of the time code versions of the IV–S are identical to those of the pilot machines. The time code circuitry is located on the top of the battery compartment, in the place where the pilot circuits are to be found in the pilot machines.
The heart of the time code system is a NATIONAL CMOS 8 bit, low power consumption NSC 800 microprocessor. All other integrated circuits used are also CMOS. The microprocessor performs several tasks, all according to the SMPTE / EBU standard:

Time code generator
Time code reader: off tape signal
Time code reader: external source

These functions are in practice often combined. The off tape time code is read and regenerated by the internal generator in order to supply a clean signal to the time code output, free from drop outs and jitter. A time shift (see page IV 1.5–1) according to the speed is applied during this process to compensate for the distance between the time code and audio heads.
An external signal is also regenerated and time–shifted in the same manner before being fed to the time code recording amplifier and in turn to the time code head. When using an external time code source, the internal generator may be JAM SYNCED using the external time code reader to set the internal generator.

The microprocessor is powered when the main function selector is in any position other than STOP, to prevent excessive drain from the batteries when the machine is not in use. However, this does not mean that the time code generator itself is not running in the STOP position, the real time clock (RTC) and some circuits are powered continuously even in STOP. (Assuming there is sufficient power available). A large capacitor serves as a back–up power supply for a short time to these circuits in order to allow the batteries of the machine to be exchanged, without losing the relationship between the generator and real time.

The signal available at the output connector, when the machine is in the TEST position, is not shifted in time, and therefore corresponds to the time code being generated, and thus allows the IV–S TC to be used as a master clock.

1.4 RECORDING FORMAT

The recording format of the NAGRA IV-S TC complies with the standard as accepted by the EBU in 1984 for the recording of centre track time code on 6.35 mm audio tape.
This standard mainly prescribes the following:

Audio tracks	2 mm with 2 mm interspacing
Code track	0.35 to 0.38 mm in the centre of the tape
Code format	SMPTE 80 bits, longitudinal
Recording	bi-phase modulation
Recording level	721 nWb/m pp ±3 dB
Rise and fall time	65 microseconds ±10 microseconds

Time code and sound longitudinally coincident on the tape.

STANDARDIZATION

The different products and different manufacturers compatibility is, of course, a matter of vital importance. The quarter inch audio tape recorders considered here record the SMPTE / EBU-80 bits time code on a centre track for which the specification has been adopted by the EBU. This standard (as above) covers all parameters necessary to ensure compatibility of tapes recorded on different equipments. At present more than 10 different manufacturers have adopted this format. The differences in timing between the time code head and the audio heads is obviously different from one manufacturer to another, thus every tape recorder is expected to shift the incoming and outgoing time code signals in such a way that the audio and time code always remain in accurate phase on the tape, and of course on the input and output connectors, even if the recorder uses different heads for audio and time code.
The amount of shifting done in the NAGRA IV-S TC at each speed can be seen on the following page.

1.5 DISTANCE BETWEEN HEADS

Due to the mechanical design of the tape transport of the IV-S TC, and the fact that it is a three head machine, it is necessary to shift the time code in order to record the time code that corresponds to its particular piece of sound in the correct place on the tape.
The time code is delayed by varying amounts depending on the selected tape speed. It is also dependent upon the selected frame rate, and can therefore be expressed in terms of frames, bytes and bits according to the following table:

Standard	Tape speed cm/s	Tape speed ips	Frames	Bytes	Bits
NTSC	9.525	$3\frac{3}{4}$	7	2	4
30 F.P.S	19.05	$7\frac{1}{2}$	3	6	2
(2400 BITS / SEC)	38.10	15	1	8	1
PAL	9.525	$3\frac{3}{4}$	6	0	3
25 F.P.S	19.05	$7\frac{1}{2}$	3	0	1
(2000 BITS / SEC)	38.10	15	1	5	1
FILM	9.525	$3\frac{3}{4}$	5	8	0
24 F.P.S	19.05	$7\frac{1}{2}$	2	9	0
(1920 BITS / SEC)	38.10	15	1	4	4

NOTE: 1 bit = 1/80 th. of a time code word
1 byte = 8 bits or 1/10 of a time code word
1 frame = 80 bits or 1 time code word

2.1 KEYBOARD DESCRIPTION

The slide–out key panel contains 11 keys which are used to control all time code functions. It works in direct conjunction with the microprocessor and is activated when the main function selector is in any position other than "STOP".
All the keys with the exception of the SHIFT key have three functions: DIRECT, NUMERICAL and SHIFTED (see below). The status of the time code system can be displayed on the LCD display at any time.

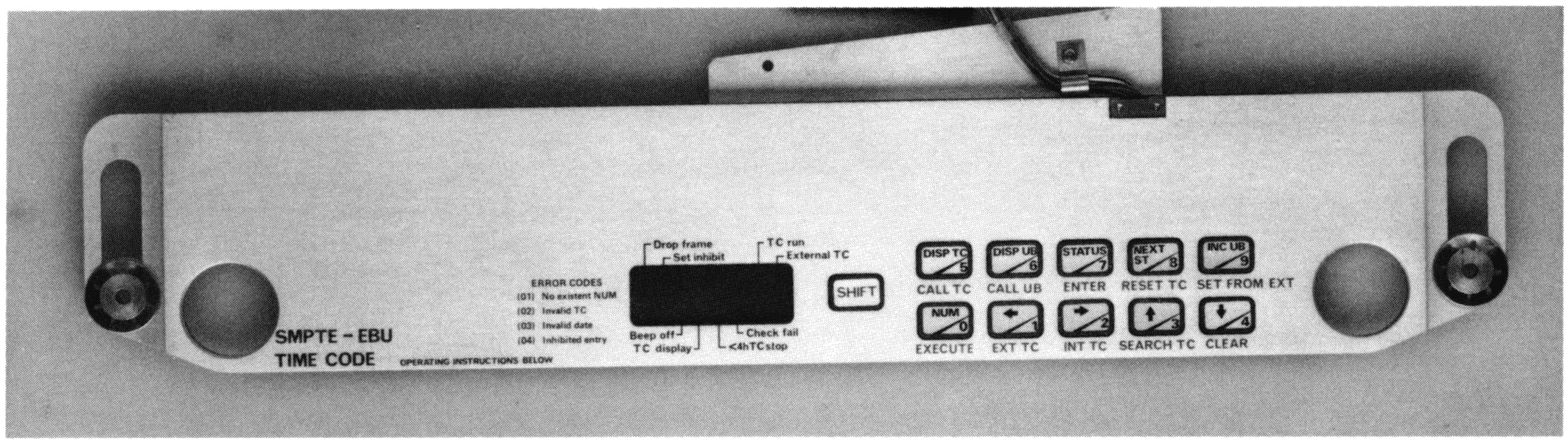

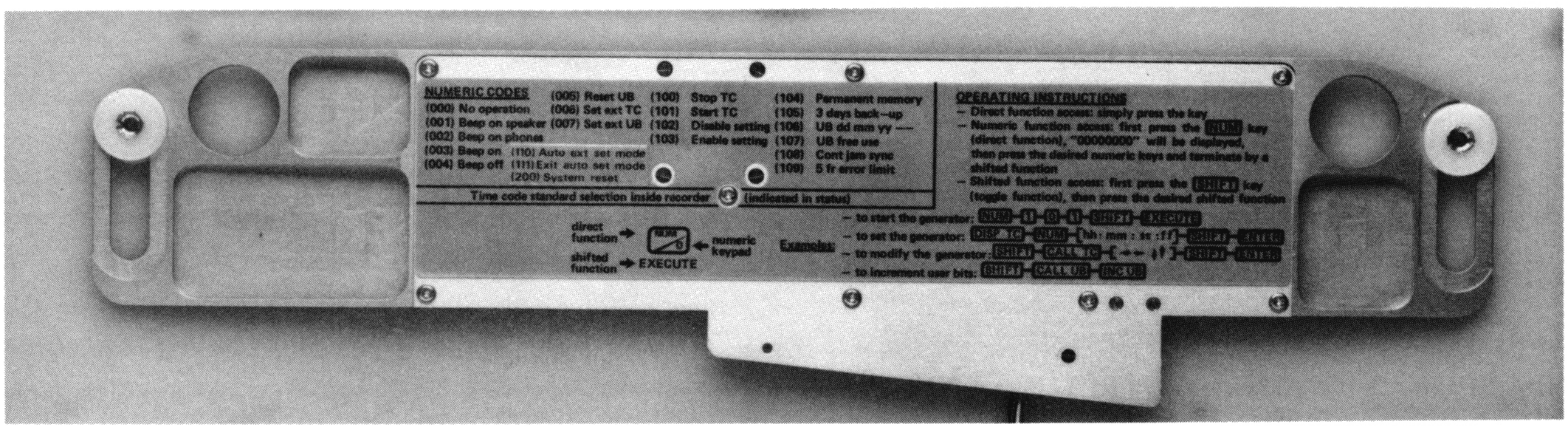

DIRECT FUNCTION As printed on each key, the function is activated the moment the key is pressed.

NUMERICAL FUNCTION The keys have their numerical value printed on them. When in the numerical mode, these are used for special functions and the entry of time code data.

SHIFTED FUNCTION Printed in RED beneath each key. To activate these functions the shift key must be pressed first.

NOTE: If the SHIFT key is pressed by mistake, then press SHIFT a second time and the function is immediately cancelled.
Also note that the DIRECT functions never affect the operation of the system so as to prevent any interruption of the recording which is in process.

2.2 KEYS DESCRIPTION

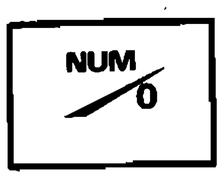

EXECUTE

Access to the numerical value of all keys.
Numerical value 0.
Execution of a numerical command, according to the value of the command presently on display.

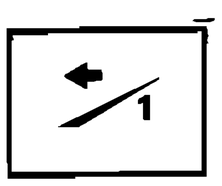

EXT.TC

Moves the flashing digit to the left when in CALL TC or CALL UB mode.
Numerical value 1.
Selects the external time code signal for display and recording.

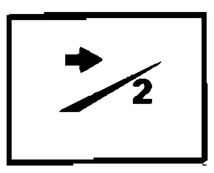

INT TC

Moves the flashing digit to the right when in the CALL TC or CALL UB mode.
Numerical value 2.
Selects the internal time code generator for display and recording.

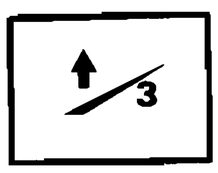

SEARCH TC

Increment of the flashing digit when in CALL TC or CALL UB mode.
Numerical value 3.
Initialization of the playback search function.

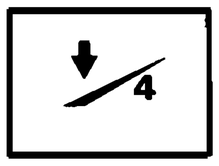

CLEAR

Decrement of the flashing digit when in CALL TC or CALL UB mode.
Numerical value 4.
Resets the display to zero when in numerical mode.

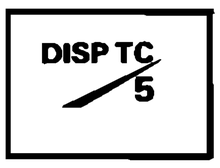

CALL TC

Causes the display of time code – Off tape
– Generator
– External.
Numerical value 5.
Displays the internal generator and starts the modification mode.

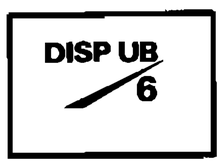

CALL UB

Causes the display of user bits – Off tape
– Generator
– External.
Numerical value 6.
Displays the internal user bits and starts the modification mode.

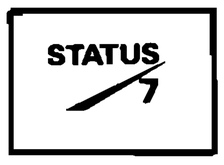

ENTER

Starts the status display menu on the first line.
Numerical value 7.
Terminates the CALL TC or CALL UB modes and stores any modifications.

RESET TC

Selects the next line of the status menu.
Numerical value 8.
Resets the internal time code generator to zero.

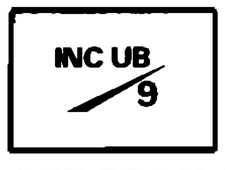

SET FROM EXT

Increases the value of the last two positions of the user bits, when in CALL UB mode. An internal ENTER command is performed automatically.
Numerical value 9.
Causes a JAM SYNC of the internal generator from an external time code source.

2.3 DISPLAY AND BEEP

The eight digit LCD display is not only used to visualize time code and user bit values, but can also be used to see the STATUS of the time code system. The time code or user bits on display may come from any of the following sources:

INTERNAL GENERATOR	Main function selector Recording mode	TEST or RECORD Internal
EXTERNAL SOURCE	Main function selector Recording mode	TEST or RECORD External
OFF TAPE SIGNAL	Main function selector	PLAYBACK

The time code system of the IV–S TC emits a beep signal on either headphones or the loudspeaker output to confirm various functions of the recorder:

Correct initialization after switching on
Correct execution of a numerical command
Acquisition of an external time code (set from external)
Acceptance / entry of new time code or user bits

The beep can be inhibited by means of numerical command 004 and turned back on again by means of numerical command 003. The beep may be switched to the internal loudspeaker by numerical command 001 or alternatively to the headphones by numerical command 002.

NOTE: The beep signal is always automatically inhibited whenever the machine is in the RECORD mode.

NOTE: The LCD keyboard display is powered in all positions of the main function selector except STOP. Thus, when checking the operating modes or making any modifications, it is necessary to select TEST.

2.4 STATUS DISPLAY MENU

One of the most important features of the NAGRA IV-S TC is that it allows the control and monitoring of the time code status of the machine and its functions during set up.
The first line of the status menu appears on the display when the STATUS key is pressed. Vertical lines will appear opposite the messages written around the display.

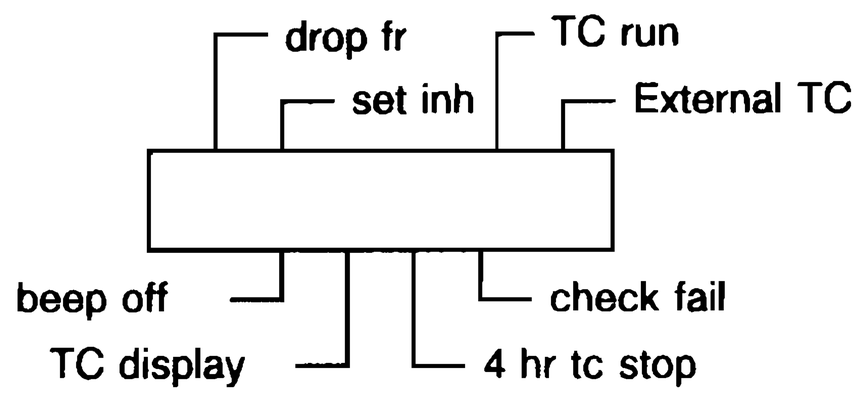

DROP FRAME
1 = The selected frame rate is 29.97 or 30 drop frame
0 = (blank) Any other possible frame rate is selected.

SET INHIBIT
1 = Numerical command 102 has been selected to prevent accidental modification of the real time clock.
0 = (blank) Setting / modification is possible. (Numerical command 103)

BEEP OFF
1 = The beep tone is suppressed. Numerical code 004
0 = (blank) Beep is on.

TC DISPLAY
1 = Unless an alternative choice is made the time code is displayed. This information is particularly useful when the tape is not running or the user bits are being used to store time data.
0 = (blank) Anything other than time code is on display.

4H TC STOP
1 = Machine is in the 3 DAYS BACK UP mode (numerical command 105), and the power of the time code circuit will be cut off in 4 hours or less.
0 = (blank) Either the machine is not in 3 DAYS BACK UP mode or the 3 days limit is not within the next 4 hours.

CHECK FAIL
1 = The delay imposed upon the time code signal by the microprocessor to compensate for the distance between the audio and time code heads is not correct. If the operator wishes to restore the phasing of the time code signal and the audio, he should just select STOP, using the main function selector. This will also show a "1" if there is any other problem with the time code system.
0 = (blank) All functions are correct.

TIME CODE RUN
1 = the internal time code generator is running.
0 = (blank) The internal generator has been stopped.

EXTERNAL TC
1 = The system is switched to external time code and the microprocessor will only take into consideration code features that originate from the external socket, for the display as well as for recording.
0 = (blank) The machine is set to run from internal time code.

OTHER STATUS AVAILABLE

After the STATUS key has been pressed, other information is available, by pressing the NEXT STATUS key:

1st press = Selected frame rate, which is selected using the rotary selector on the time code circuit. (if the machine is in DROP FRAME mode then a vertical stroke will appear on the display when in the STATUS mode)

2nd press = The display shows the mode in which the power is supplied to the time code circuits memory. Either CONT is displayed when in the permanent mode (numerical command 104) or 3 DAYS is displayed when in the 3 DAYS BACK UP mode. (numerical command 105).

3rd press = The display shows the mode of the user bits. Either DATE UB is displayed when in the calendar mode (numerical command 106) or FREE is displayed when in the free user bits mode. (numerical command 107).

4th press = The display shows the error correction mode selected.
Either 5 INC for the automatic correction of up to 5 consecutive errors received from the external time code signal (numerical command 109), or CONT INC is displayed for continuous correction of errors. (numerical command 108).

5th press = The version of software installed on the time code circuit. For further information on software see SOFTWARE EVOLUTION (Appendix "B").

2.5 NUMERICAL COMMANDS

The numerical commands allow selection, and in some cases memorization of the function, thus allowing to a certain extent personalization of the system by the operator. Numerical commands are all entered via the time code keyboard, and are silk screened under the keyboard, along with the error messages of the machine.

To enter a numerical command it is necessary to press the NUM key. Then enter the three digit code using the numbers on the keys, corresponding to the desired code "XXX". When this is done press SHIFT and then EXECUTE in succession. When reading a numerical command, the machine will only take the three right-most digits into consideration, thus if the display shows all zeros, it is not necessary to enter the preceeding zeros in the code.

If an error is made when entering a code, then press CLEAR followed by SHIFT then EXECUTE to return the display to all zeroes. Then enter the correct number.

If the function NUM was selected in error, just enter the code 000 or press SHIFT then CLEAR, followed by SHIFT then EXECUTE, to return to the original state.

In the event of an unknown numerical command number being entered, the error message "ERROR 01" will appear on the display. To delete the error message press NUM again then enter the correct number.

Numerical commands

000 NO OPERATION: Cancels the NUM function, and is used only to remove the NUM function entered in error.
This also allows to quit from a SET FROM EXT when no external time code is present. As the code is 000 it can be performed by simply pressing SHIFT then EXECUTE.

001 BEEP ON SPEAKER: Directs the beep signal to the internal loudspeaker.

002 BEEP ON PHONES: Directs the beep signal to the headphones output.

003 BEEP ON: Activates the beep feature and directs it to the headphones and the loudspeaker.

004 BEEP OFF: Deactivates the beep signal. This is indicated when in the STATUS mode by a vertical line opposite the BEEP OFF mark.

005 RESET UB: Resets the user bits to zero.

006 SET EXT TC: This allows only the internal time code generator to be set from an external source.

007 SET EXT UB: This allows only the user bits to be set from an external source.

100 STOP TC: This stops the internal time code generator causing the same number to be sent continuously to the output.

101 START TC: This starts the internal generator.

102 DISABLE SETTING: Inhibition of all the functions used for setting the internal generator. This selection is indicated by a vertical line oposite "SET INHIBIT" when in the STATUS mode. However the user bits remain accessible and can be changed as required.

103 ENABLE SETTING: Allows the setting of time code. This function only needs to be used if numerical command 102 had previously been selected.

104 PERMANENT MEMORY: The data and modes of operation of the time code system are saved, and the internal time code generator will function until the batteries are no longer capable of supplying enough power. This mode is visible on the display after the operator has selected STATUS and pressed the NEXT STATUS key twice.

105 3 DAYS BACK UP: The internal generator will be supplied with power for three full days, allowing stored functions to be kept, after the last operation of the machine. The operation of this mode may be seen on the display after the operator has selected STATUS and then pressed the NEXT STATUS key twice. When there is 4 hours or less remaining before the power to the memory is cut off a vertical line appears opposite the 4 HR STOP position when in the STATUS mode.

106 UB dd–mm–yy: The user bits are only to be used as a calendar. This function can be seen after the operator has pressed STATUS followed by NEXT STATUS three times, the display will show 3 dAYS.

107 USER BITS FREE USE: The user bits are not in calendar mode and can be programmed in HEX (0–F), according to needs. This mode can also be seen on the display after pressing STATUS followed by NEXT ST three times.

108 CONT JAM SYNC: The system automatically corrects errors in the time code coming from an external source, and continues to generate time code, even after a break in the external link. If this occurs then the display will indicate alternately the generated time code value and ERROR 02. The selection of this mode can be seen on the display by the message CONT INC after the operator has pressed STATUS followed by NEXT ST four times.

109 5 FRAME ERROR LIMIT: This is the normal operation mode.
The system will correct the first five consecutive errors received from the external source, and will then display ERROR 02. The selection of this mode is indicated by the message 5 INC after the operator has selected STATUS followed by NEXT ST four times.

110 AUTOMATIC SET FROM EXTERNAL: When connected to an external time code signal, the internal generator will automatically make a SET FROM EXTERNAL as soon as it detects a difference between its own time code and the external source. A beep will be heard after each successful SET FROM EXTERNAL.
When no external time code is available then the display alternately flashes time code of the internal generator and the message AUTO SET.

111 EXIT FROM AUTO SET: This takes the machine out of the auto set mode, and returns the generator to normal operation. It also allows the exit from the continuous jam sync mode (NUM 108).

200 RESET : This function causes the microprocessor to make a total reset, and will cause stored numerical commands to be lost and the default values to be stored instead.

If no special numerical commands are fed into the system, the following "default values" will be in the system (this is also the case after numerical command 200 has been performed).

—	– Generator will start at 00.00.00.00
107	– Free user bits, value of 00.00.00.00
104	– Permanent power supply to the memory and generator
103	– Non protected updating
003/001	– Beep on, and fed to the internal loudspeaker
109	– Correction of errors in external input up to 5 consecutive errors.

NOTE: After entering NUM 106 (date ub) and then entering the display user bits mode the last software revision date will automatically be displayed (18.03.87 for the 1.9 version).

2.6 ERRORS AND ERROR CODES

In the event of keyboard errors, or incorrect operating modes, the microprocessor is programmed to show an error message. These error messages only appear when the machine is displaying either time code or user bits, and do not appear during the status mode in order to enable the operator to locate the problem as quickly and easily as possible.

When an error occurs, the display will indicate "ERROR" followed by two digits that indicate the type of error. The error code list is printed on the bottom of the keyboard.

ERROR 01 Non existent NUM

Cause The numerical command number is not recognized by the microprocessor and appears after the operator has entered an incorrect number. To correct this, press NUM followed by the correct number. Then press SHIFT followed by EXECUTE.

ERROR 02 Invalid time code.

Cause The machine is set to external time code operation but there is no readable signal at the time code input, or the machine is set to 5 INC (error correction mode) and it has detected the 6th consecutive error from the time code source.
This error message will appear alternately with the time code when the input signal is of insufficient quality or is no longer present, when in CONT (continuous increment) mode, and this means that the internal generator has taken over.

ERROR 03 Invalid date

Cause The calendar mode of the user bits has been selected and the date entered is either non existent or does not conform to the dd.mm.yy.xx format.

ERROR 04 Inhibited entry

Cause DISABLE SETTING has been selected, and an attempt has been made to set the internal generator.
To cure this select numerical command 103

ERROR CORRECTION MODES

When recording a time code from an external source, an error detection and correction system is provided to protect against "drop outs" of the signal.

Two different modes of correction are provided:

– Automatic correction of the first five consecutive errors detected, and then at the sixth, the microprocessor automatically stops the recording of time code and displays the error message "ERROR 02" (invalid time code). This mode is selected through the keyboard, using the numerical function, numerical command 109, or alternatively at the time of power up.

– Automatic correction of all errors in the signal originating from the external source, and alternating the display of time code with the error message ERROR 02. The time code will continue to be recorded correctly on tape without interruption. The time code recorded on the tape is no longer the original external time code source, but a time code generated by the internal generator. This mode is especially useful when working with a cable connection between the IV–S TC and the camera or the video recorder and there is a possibility of connection failure. This fully automatic mode of error correction is also programmable via the keyboard with numerical command 108.

2.7 KEYBOARD USE

CHANGING THE DISPLAY MODE

Simply press one of the following DIRECT keys :

- DISP TC
- DISP UB
- STATUS
- NEXT ST

To display the status of the time code, first press the STATUS key. In this mode the status of the machine is displayed as either "1" or " " (nothing), and the vertical lines lie directly in line with the written messages around the display.

EXECUTION OF A NUMERICAL COMMAND

First press the NUM key, in order to enter the numerical mode, and then enter the three digit numerical code, which corresponds to the desired function. Then execute the command by pressing SHIFT followed by EXECUTE. If an error is made while setting the number, it can be corrected before pressing SHIFT then EXECUTE, by pressing SHIFT then CLEAR. Only the three least significant digits are taken into account by the microprocessor. If an invalid command number is entered that the microprocessor does not recognize, the error message ERROR 01 will appear.

When a correct numerical command has been entered, the display will immediately return to its previous display mode and a beep signal will be emitted.

SELECTION OF AN INTERNAL OR EXTERNAL TIME CODE

To select an external time code simply press SHIFT then EXT TC: the machine will automatically only accept external time code, and this will be displayed immediately on the display. Before selecting external time code make sure that an external source is connected to the five pin LEMO connector, or ERROR 02 will be displayed.
To return to the internal time code simply press SHIFT then INT TC.

NOTE: If numerical command 102 (disable setting) has previously been selected, then internal and external time code selections are not selected, ERROR 04 will be displayed.
Numerical command 103 will enable setting again.

SETTING FROM AN EXTERNAL TIME CODE

To make a setting of the time code generator (time code or user bits) from an external source simply press SHIFT then SET FROM EXT. Before making this selection make sure that an external source is connected to the LEMO external time code input. If this is not the case then ERROR 02 will be displayed.

To set time code only (leaving the user bits untouched) execute numerical command 006, or to set only the user bits (leaving the time code untouched) execute numerical command 007.

NOTE: If numerical command 102 (disable setting) has previously been selected then the above functions will not be executed, and ERROR 04 will appear on the display.

INCREMENT USER BITS

To use this function, the user bits must be in the FREE mode (numerical command 107). To increment the least significant digit of the user bits press SHIFT then CALL UB then INC UB.

A beep will be heard each time the user bits are successfully incremented. This function is especially useful for "TAKE" numbering, however, it will only increment the last two digits of the user bits up to a maximum value of 99.

3.1 INTERNAL GENERATOR

The NAGRA IV–S TC is fitted with an internal time code reader / generator, using the SMPTE / EBU 80 bits code, at any frame rate presently in use. It will generate code accurate to one frame in eight hours (providing that there is sufficient power available). The IV–S TC also incorporates a time code reader that allows the code to be read back from the tape at nominal speed, or at variable speed from 0.5 to 6 times the recorded speed.

The microprocessor automatically compensates for the distance between the time code and audio playback heads when running at nominal speed.

The time code is available in two forms at the output when replayed at nominal speed :

- As supplied by the microprocessor (regenerated and shifted according to the speed) and hence correctly related to the audio.

- As read directly from the tape by the time code head in advance with respect to the audio)

The time code reader / generator also contains an automatic error correction system that can work in two different modes. (See error correction page IV 2.6–2).

3.2 SELECTION OF FRAME RATE

All frame rates currently in use in both film and video use are available in the NAGRA IV–S TC.

- 24 frames per second for cinema (according to the SMPTE standard)
- 25 frames per second for cinema and european television (according to the EBU standard)
- 30 frames per second for cinema and american black and white television (according to the SMPTE standard).
- 29.97 frames per second * for american television.
- 29.97 frames per second * with image compensation (DROP FRAME) for american colour television.
- 30 frames per second with drop frame to allow conversion between cinema and television in the NTSC countries.

* The operation at 29.97 frames per second requires the use of an optional extra crystal (not fitted as standard in the CCIR machines).

The selection of the operating frame rate is made inside the recorder on the time code circuit as follows:

- Put the recorder in the STOP position.
- Slightly loosen the two screws located on the right–hand side of the machine marked "OPEN".
- Open the deck completely by lifting to the left–hand side.
- Select the desired frame rate using the rotary selector located on the time code board on top of the battery compartment, in the centre of the machine.
- Do not forget to retighten the box fastening screws.

The frame rate may easily be seen by looking at the first line of the STATUS DISPLAY menu i.e. press STATUS then NEXT ST and the first line of the menu will appear.

NOTE: Alterations of the frame rate are only considered when a total microprocessor reset is made (numerical command 200), or alternatively when the machine is switched to STOP and then to ON again.

3.3 USER BITS SETTING

As explained earlier, the SMPTE / EBU 80 bits time code standard reserves eight bits of the code for user information.
As a general rule these are used to identify static information serving as identification of a particular sequence such as the scene number, camera number, scene or take number or any other information of this type. These user bits can also be used to indicate the date and therefore the IVS–TC offers two different modes of operation:

FREE USE "FREE UB" This mode is selected via the numerical mode using numerical command 107, and allows the operator to enter any value from 0 to F (hexadecimal) for each of the eight positions.

CALENDAR "DATE UB" This mode is selected via the numerical mode using numerical command 106, and allows the operator to enter, using the six left–most positions of the display, the date in the DD MM YY format. The remaining two positions on the right of the display are still usable in the free mode for any value from 0 to F. When in the CALENDAR mode, the date is automatically advanced when the time code passes 23:59:59:XX and is programmed to remain correct until the year 2100.

The mode, of the user bits, can be seen using the STATUS mode, and pressing the NEXT ST key twice. If they are in the FREE mode, then the message FREE UB will be displayed whilst if in the CALENDAR mode the message DATE UB will be displayed. It should be pointed out that these user bits will be recorded on each and every frame in the form in which they were entered.

SETTING OR MODIFICATION OF USER BITS

The operator has the possibility to modify the user bits at any time (except during a recording) and this modification may be done either using the keyboard or an external source.

USING THE KEYBOARD

Two possibilities are available:

- Call up the user bits by means of the DISP UB key
- Press the NUM key and then enter the values corresponding to the correct value, in the form DD:MM:YY:XX when in the DATE UB mode, or alternatively in the XX:XX:XX:XX format when in the FREE UB mode. When in the CALENDAR mode ERROR 03 will be displayed if any of the digits are invalid.

PROTECTION OF DATA

In order to prevent unintentional modification of time code or user bits, numerical command 102 may be executed, which will inhibit any attempt to modify the internally stored data. If an attempt is made to modify data in this mode ERROR 04 (inhibited entry) will be displayed. It should be noted that numerical command 102 will only protect the internal time code generator from modification and allows free access to the user bits which may still be set from either the keyboard or an external source.

TIME CODE OR USER BITS MODIFICATION

All modifications are possible as long as numerical command 102 is not set.

SETTING TIME CODE OR USER BITS

When setting the time code or the user bits, it is not necessary to stop the internal generator. First press the NUM key and select the desired time code value or user bits, then press SHIFT followed by ENTER. Both the time code and date can be modified in this manner. However, it is whichever was on the display before the NUM key was pressed which will be modified. If any of the information fed in is in the wrong format, then an error message will be displayed.

NOTE: The modification is not made while the numbers are being entered, but at the moment that the ENTER key is pressed.

MODIFY TIME CODE

With this mode the internal generator is automatically stopped. First press the CALL TC key, and the left–most digit will start blinking to indicate that it is in the modify mode. This blinking digit may be changed using the left and right arrow keys, and the blinking digit may be either incremented or decremented using the up and down arrow keys. When the modification is complete and ready to be implemented, simply press SHIFT followed by ENTER. The value is immediately fed into the internal generator which will start counting from this new value.

MODIFY USER BITS

This function does not stop the internal generator and can be used to modify or set the user bits. The means of setting these is exactly as above except that the CALL UB key must be used. The changing of the digit values is as above. When using the INC UB key then an ENTER command is automatically executed each time it is pressed.

3.4 SETTING FROM EXTERNAL TIME CODE

To make a setting of the internal generator from an external time code source, simply press the SET FROM EXT key. Before doing this make sure that there is a time code source connected to the LEMO connector, otherwise ERROR 02 will be displayed.

When the internal generator has correctly set itself from the external source a short beep signal is emitted to tell the operator that correct setting has taken place.

If the microprocessor detects an error in the external signal then ERROR 02 will be displayed. It should be noted that when using this function both the time code and the user bits will be amended at the same time.

NOTE: If the user bits of the machine are set to a different format with respect to those of the external signal (DATE UB or FREE) then ERROR 03 will be displayed (see numerical commands and error messages).

EXTERNAL TIME CODE

Always check that the frame rate setting of the IV–S TC corresponds to the frame rate of the external source.

To record external time code rather than just set the internal generator from it, press SHIFT followed by EXT TC. The moment this is done a "1" will appear on the display in the STATUS mode opposite the external time code message around the display. In this mode the time code recorded will be the external source. However a time code link must be kept at all times between the external source and the IV–S TC. This mode is useful especially when working with a system where all the machines are recording time code from one master clock. Thus the IV–S TC can remain in perfect correlation with all the other machines.

In order to use the IV–S TC as the MASTER CLOCK all the time code signals present at the time code output are available with no offset (to compensate for the distance between the time code and audio heads), when the machine is in the TEST position.

3.5 SIGNALS AVAILABLE AT THE OUTPUT

During recording the following signals are available :

CUE connector

sync ref	reference frequency	76.8 KHz at 30 frames per sec. 64.0 KHz at 25 frames per sec. 64.44 KHz at 24 frames per sec.

Time code connector (LEMO 5 pins)

TC output	Time code signal according to the SMPTE / EBU standard (0 V to 5 V bi–phase modulation)

The signal on the time code output pin appears in two different forms according to the position of the main function selector. In the TEST position the signal is identical to that furnished by the internal generator. However in the RECORD position of the main function selector the signal present is offset, in order to correspond to the audio signals present at the audio outputs.

The signal present on the TC PLAY pin of the time code input connector is not usable during recording.

3.6 AUTOMATIC SET FROM EXTERNAL

In video applications, this mode of operation is particularly useful, as it is annoying to keep opening the carrying case of the machine and then sliding out the keyboard to make a SET FROM EXTERNAL every time the video camera is switched on. (This needs to be done because all video cameras "colour frame" themselves thus moving their time code generators forward to get into the next colour framing sequence). It is for this reason that the IV–S TC is equipped with the AUTOMATIC SET FROM EXTERNAL function (numerical command 110). When this function is selected, and whenever the IV–S TC is connected to an external time code source, the internal generator will automatically make a set from external if it detects any difference between the incoming time code and the time code it is generating internally.

Each time a successful SET FROM EXTERNAL is made a beep is emitted. This function can also be used as a warning, to tell the operator that the frame rate of the external signal is not the same as that of the IV–S TC. If this occurs, the machine will make a SET FROM EXTERNAL when it is first connected to the incorrect source, then it will immediately make another one as it will see a difference straight away. This will continue as long as the problem is present. Thus a series of beeps will be heard acting as a warning.

If the cable is removed after a successful SET FROM EXTERNAL while the machine is in the automatic set from external mode then the display will alternately show the incrementing time code from its internal generator and the message AUtO SEt. However this does not occur when the IV–S TC is in the RECORD mode.

3.7 USING THE IV-S TC WITH THE AATON ORIGIN "C"

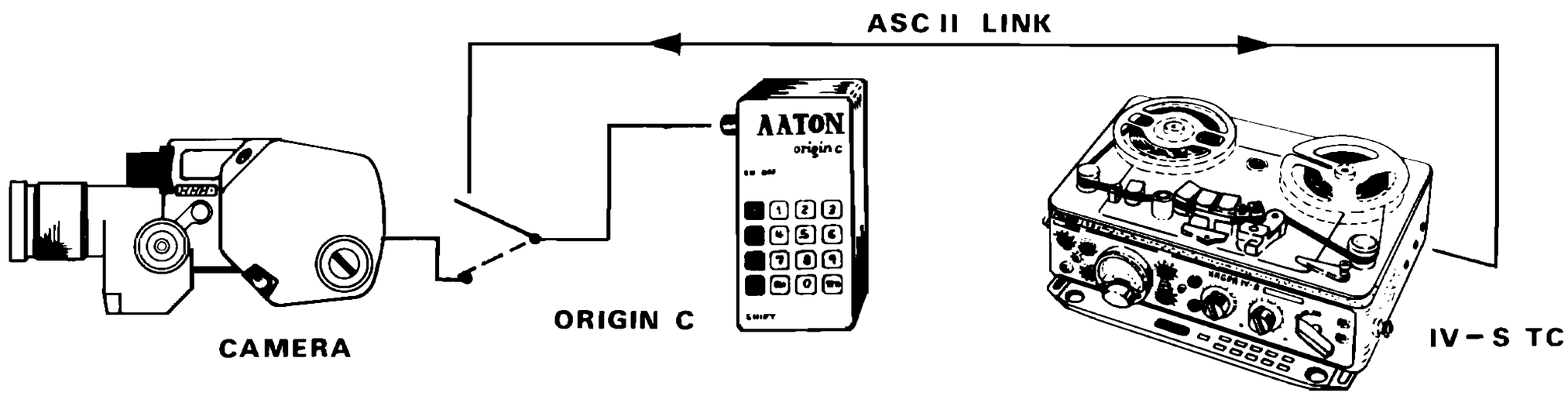

To enable the IV-S TC to communicate with the AATON origin "C" master clock in a film environment, a QSIA interface must be fitted into it.

When the machine is connected to the clock, it will automatically execute numerical command 106 (date user bits) (Version 1.9 software onwards only)

To set the time code proceed as follows:

- Turn on the IV-S TC and the master clock, the IV-S TC will beep and the origin "C" will display Pr 00 (blinking).
- Check that the frame rate of the IV-S TC is set to the correct frame rate by means of the STATUS mode. Also check that the user bits are in CALENDAR mode by pressing NEXT ST twice. If not, then execute numerical command 106.
- Setting the AATON origin "C" is done by pressing the "#" key. The origin "C" then displays y-000000. Introduce the current date in the year / month / day format. Each group of two digits is entered by pressing the "#" key. The origin "C" then displays h-000000. Introduce the correct time as above in the format hours / minutes / seconds (HH MM SS).

  The origin "C" now displays Pr 00 (blinking). Press the " * " key and it will display " – " (blinking). This operation starts the clock count.
- Transmission of the time code to the IV-S TC is made by pressing the " * " key on the origin "C". The clock will display the following sequence: "control"; "out"; "control"; "Good" and the time code has then been sent to the IV-S TC. If it is not the first time the time code is sent to the IV-S TC from the AATON, the sequence will be: "control"; "bAd"; "rEloAd?" then press the " * " key to reload the time code, and the AATON will display "control" "good" assuming everything is correct.

SETTING THE AATON ORIGIN "C" FROM THE IV-S TC

Set the internal time code of the IV-S TC as explained earlier in this manual.

CHECKING THE TIME CODE ON THE IV-S TC

Connect the origin "C" to the NAGRA then press the " * " key and the origin "C" will display the following sequence EnG ; In ; control ; Good ; followed by "–" and this means that the time code has been entered. If the reply to the origin "C" is not Good, then press " * " again when the option rEloAd? is displayed.

NOTES ON THE ORIGIN "C"

IMPORTANT: The origin "C" is fitted with a power saving system and therefore it will automatically switch itself off after approximately 5 minutes. This occurs whether the operator is in the process of setting the time code at that moment or not.

It is not possible to work with the IV-S TC in the FREE UB mode as the AATON does not accept an invalid date (such as 00). It is important to check that DATE mode has been selected otherwise the reply from the IV-S TC to the AATON will read "bAd", even if the time is correct.

4.1 PILOT

The IV–S TC can be fitted with an F.M. centre track pilot system as found in the IV–SL. This changeover from time code to pilot can be made in a matter of minutes by the operator. However, it must be mentioned that the non time code IV–SL version of the IV–S cannot be modified to take the time code circuit as easily.
This requires major mechanical and electronic modifications. This RETROFIT can be done at the factory in Switzerland, and the price depends on the age and the overall condition of the machine. Your nearest agent is at your disposal to submit a quotation.

The modification of the IV–S TC to pilot is fully explained in our TECHNICAL INFORMATION sheet number 06–5 which can be found in chapter 6 of this manual.

All existing accessories for the pilot version of the IV–S can be used on the time code version when it is in the pilot configuration.

4.2 PILOT COMPATIBILITY

The NAGRA IV-S TC has been designed in such a way that compatibility with the existing pilot formats is maintained. Normal recording, as well as playback recording and transfer practices have been taken into account. These goals can be achieved in two different ways :

QSIP pilot interface

This external accessory is essentially a time code to pilot transducer, and it transforms the off tape time code signal into a pilot signal when the IV-S TC is in playback. This signal can be used to resolve an external device. It is also possible to use the existing QSLS resolver unit in conjunction with the QSIP in order to resolve and control the tape transport of the IV-S TC. This is possible not only against an external pilot reference but also against the internal time code generator, allowing the machine to SELF RESOLVE.

PILOT TRANSFORMATION

All electrical connections to the pilot circuit exist in the cable harness used in the IV-S TC without interfering with the wiring for the time code electronics in any way. Mechanically the same fixations that are used for the time code circuits are used for the pilot circuit. Hence it is easy to remove the time code system and replace it with the pilot option. To do this, no recalibration or special tools are required. (See technical information sheet 06-5 of feburary 1985 in chapter VI of this manual.)

NOTE: The internal crystal pilot generator QSGX-3 and the internal frequency meter circuit QFMS 50 / 60 are not listed on this modification sheet in the parts list. The QGX-3 is necessary unless another external pilot source is available. The QFMS 50 / 60 frequency meter circuit is an optional accessory and is not essential for pilot operation.

MODULATION METER

An approximate indication of the off tape pilot or time code level (depending on the configuration of the machine) is given by the meter when its selection switch is set to TC / PILOT PLAYBACK and the machine is in playback at nominal speed. The green needle shows approximately 50 % at 38 cm/s (15 ips) and about 40 % at 19 cm/s (7 1/2 ips)

NOTE: The meter has no significance at any speed other than nominal speed.

4.3 F.M. PILOT

The pilot signal 50 or 60 Hz, with a level of 1 V is supplied to the recorder through pilot input connector (44). To obtain the same output level of the signal during playback cue connector (47) is used. The pilot (or commentary) is recorded on the centre track between the two audio channels. All conventional CLAP signals can be used.

Conventional clapper board: This consists of a slate bearing the take number and giving both an audio and video indication (as is still used in cinema today).

Electrical clapper: This is where the film in the camera is fogged for a few frames, a signal is simultaneously transmitted to the NAGRA via a cable, and an oscillator tone is recorded onto the audio tracks.

Clapper by pilot signal suppression: Instead of recording an oscillator signal on the audio tracks, the pilot signal is cut during the start period of the camera.

An optional QFMS circuit allows the monitoring of the camera speed by monitoring the frequency of the pilot signal. If meter switch (12) is in the PILOT FREQ. position, the red needle will indicate the frequency. With switch (12) in position TC / PILOT PLAYBACK the green needle will indicate the depth of modulation of the sync pulse signal recorded by F.M. (or of the commentary respectively). A full scale deflection of the needle corresponds to a degree of modulation of ± 40%. That limit must not be exceeded.

CUE DEVICE

When the NAGRA IV-S is fitted with NAGRA SYNC (Pilot) facilities it is also possible to record commentary on the centre track, even simultaneously with a sound take with pilot. A special commentary microphone QSCM-2 is used for this purpose. It has a filter eliminating the frequency of the sync pulse signal, as well as an automatic level control (ALC). Due to the bandwidth available, the sound quality of the centre track recordings is poor. It is also possible to record commentary during playback, assuming no pilot signal has been recorded previously as it would be erased. The cue track may be monitored on headphones by switching PHONES switch (19) to the CUE position, and the volume may be adjusted by means of control (18).

5.1 USING THE IV-S TC

Before discussing the operation of the time code functions of the IV-S TC it should be mentioned that it is not necessary to continuously manipulate the keyboard. The keyboard is only used to select the time code operating mode, to reset the internal generator (time code and user bits), to change the time code or user bits and finally to verify correct operation of the time code system using the STATUS modes.

FIRST TIME OPERATION

On the first utilization, or when reusing the machine after a period of storage, and hence memory loss, it is necessary to start by selecting the desired modes of operation. The frame rate is a function that is not lost during storage, as it is selected with a hardware switch and is not user programmable via the keyboard. This is however selectable internally using the rotary switch on the time code circuit. All other modes of operation are to be selected through the keyboard, either by use of the direct function keys or by executing numerical commands as explained on page IV 2.5-1.

All the normal functions of the IV-S TC that are not related to time code, are explained in chapter I of this manual.

5.2 HOW TO RECORD A TIME CODE

Firstly it is necessary to select the desired frame rate as explained on page IV 3.2–1.

REAL TIME (ACTUAL TIME OF DAY)

This is the simplest method of working and requires the minimum amount of keyboard manipulation throughout the day.

The time code system of the IV–S TC has been developed to improve, amongst other things, the manoeuvering freedom of the camera operator and the sound technician. This allows filming with frame accurate audio, and allows operation without the need for a cable link between the video camera (or film camera) and the audio recorder. To achieve this we use the sequential time code method. A completely sequential time code without breaks cannot be made on the IV–S TC, because the IV–S TC cannot detect when the video camera has stopped. Thus it is generally preferred to record real time of day. To do this proceed as follows:

- Start by setting the time code and user bits, either manually or from an external time code source as explained on page IV 3.4–1.
- The correct time of day will be stored and incremented within the IV–S TC as long as there is sufficient power supplied, if the permanent memory mode is selected or alternatively for 3 days if the three days back up mode is selected.
- The date (if in the CALENDAR mode) of the user bits will automatically be updated at midnight, and is programmed to remain correct until the year 2100.
- When the time code is accepted by the microprocessor an audible beep will be emitted from the internal speaker, or the headphone output, depending on the selected mode. At this moment the internal generator will start running.
- The first recording may now be made as explained on page I 1.8–1 Before each new take, it is possible to increment the user bits as explained on page IV 3.3–1, thus storing the take number in the time code to make the post production work easier.
- This mode of time code recording ensures that the time code values of each take are of a higher value than the previous take.
- If working with video rather than film, it is always necessary to re– JAM SYNC the IV–S TC and the video recorder each and every time the video camera is switched on.
  See page IV 3.6–1 Auto set.

5.3 SYNCHRONIZED RECORDING

To record a time code that is synchronous with another, for example a VTR such as the NAGRA VPR-5 or a film camera (single camera or multi camera), one of the machines should be allocated as the master machine (hence master clock), and all the other machines should have their time code generators set from the master. It is also, of course, possible to use a completely separate master clock such as the NAGRA TCGR, and set all machines in the system from this.

When using the IV-S TC in the above situation, all that has to be done to set the internal generator is to press SHIFT followed by SET FROM EXT (make sure that there is an external time code connected to the time code input). This will immediately synchronize the internal generator to the external source, and a beep will be emitted (make sure the two time codes are of the same standard i.e. frame rate and user bits mode to avoid ERROR 02 being displayed).

The user bits can be modified at any time without disturbing the time code of the internal generator. The internal generator of the IV-S TC is stable enough to work for eight hours, with a drift of less than one frame, when used within the specifications of temperature etc. (see specifications page I 1.9-1).

When working with time code, it is always a good idea to make a note of the frame rate used to make the original, as this takes time to discover during post production (especially note whether drop frame mode has been used).

RECORDING AN EXTERNAL TIME CODE

If the system is running from an external time code source, it is only necessary to select SHIFT followed by EXTERNAL TC. In this case the incoming signal is delayed to compensate for the distance between the heads, and then recorded in perfect correlation with the audio without any modification to its contents.

5.4 READING A TIME CODE

As soon as the IV-S TC is put into the PLAYBACK mode the time code from the tape is displayed, as opposed to that from the internal generator. However if the EXTERNAL TC mode has been selected, then this will be displayed. It is also important to remember that the internal generator does not stop counting, even though it is not on the display.

The time code from the tape can be read at nominal speed, at slow speed and also during fast forward. However, the head offset compensation and error correction of the first five consecutive errors (after which the display is normally frozen) are only possible at nominal speed.

NOTE: No time code is available at the time code output when the machine is at any speed other than nominal.

When the tape is stopped manually by squeezing the two halves of the pinch roller assembly, the last time code value read from the tape will be left on the display, and will remain there as long as the tape is stationary.

5.5 USE OF THE IV-S TC IN VIDEO

All video recorders interlock their time code generators in both phase and speed, with the synchronizing signal provided by the video camera. In order to align the time code signal and the image while complying with the requirement for COLOUR FRAMING of the image, it is necessary to always use the time code signal furnished by the video system as the master clock.

As a result, each time the video camera is switched on the time code generator is moved by 1, 2 or 3 frames, depending on how many frames the video system needs to move to get into the next sequence of colour framing.

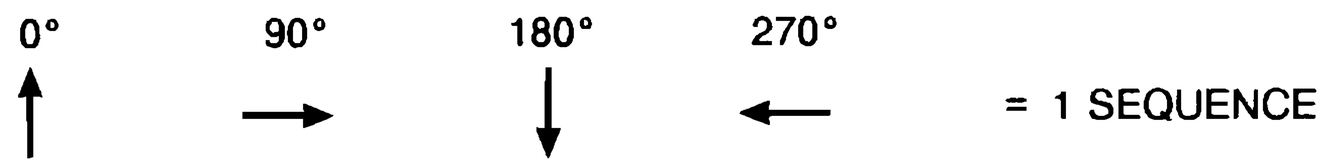

In theory the time code needs never move more than 2 frames, however, in practice a video system always moves the generator forwards. Due to this effect, it is necessary to JAM SYNC the internal generator of the IV-S TC each time the video camera is started. Despite the fact that the internal generator of the IV-S TC is accurate to 1 frame in eight hours, as the video time code is changing at the start of each take, a JAM SYNC must be made to prevent accumulative errors in the time codes throughout the production.

It is for this reason that the IV-S TC is equipped with the AUTO SET function (see page IV 3.6-1), to minimize the amount of keyboard manipulation for each take.

Providing this is remembered, then working in video applications without permanent cable link is possible.

5.6 WORKING WITH A CABLE LINK WITH ONE OR MORE CAMERAS

This working mode is only used normally when the internal generator of the video camera does not allow FREE RUN (or real time) time code to be used.

Firstly switch on the camera(s), and set all their time code generators, if there are several cameras, and check that the GEN LOCKS have been performed correctly. Then connect the IV–S TC to the time code output of the video that has been chosen as the master. Check that all the frame rates etc. are the same (using the STATUS mode and NEXT ST MODE on the IV–S TC), modify where necessary, and make sure that the automatic error detection/correction on the IV–S TC has been selected. Finally press SHIFT followed by EXT TC and start the shooting.

If the internal generator detects a problem with the incoming time code ERROR, 02 will be displayed.

In this configuration, the IV–S TC will record exactly the information furnished by the video generator. That is to say that if the external source stops then no more time code will be recorded and the message ERROR 02 will be displayed, thus informing the operator that the video machine has stopped. During the post production stage of the production it will be sufficient to manually cut out all these "blanks" and thus leave one continuous time code on the tape for editing purposes. Most video editing systems can cope with any remaining jumps.

NOTE : The length of the time code link up cable between the IV–S TC and the master is a function of the quality of the time code signal furnished by the master. The signal is automatically regenerated and reshaped by the internal generator of the NAGRA before being recorded and, should the input signal be or become too weak, the message ERROR 02 would be displayed and the recording of time code would stop. The possible modes of error correction can be selected via the keyboard, depending on the desired mode of operation (see page IV 2.6–1).

5.7 TIME CODE IN FILM

At this time, no final standard has been laid down for the recording of time code on film, and as a result, several different methods are in use.
Many people ask "what is the need for time code in film?" as manual editing of film, using edge numbers, clap marks etc. have been used for many years without problems. The answer to this question is the transfer of film onto video tape, which has no sprocket holes, edge numbers, or visible clap points.

Two different recording media for time code in film are presently in use, and these are: a magnetic strip along the side of the film and optical recording on the film itself. The NAGRA IV–S TC has been developed in order to be compatible with both types providing the final product is an SMPTE / EBU longitudinal time code. In the optical field of time code there are various different methods of recording such as block matrix and bar code. We are not involved in this problem of recording and reading time code on film, our concern is only the compatibility of the IV–S TC with all the other systems.

To use the IV–S TC with film the procedure to follow is almost identical to that of video, except that the continuous need to make a SET FROM EXT each time the camera stops is not necessary, as colour framing problems that occur in video applications do not occur with film.

For use of the IV–S TC in conjunction with the AATON origin "C" please refer to page IV 3.7–1 of this manual.

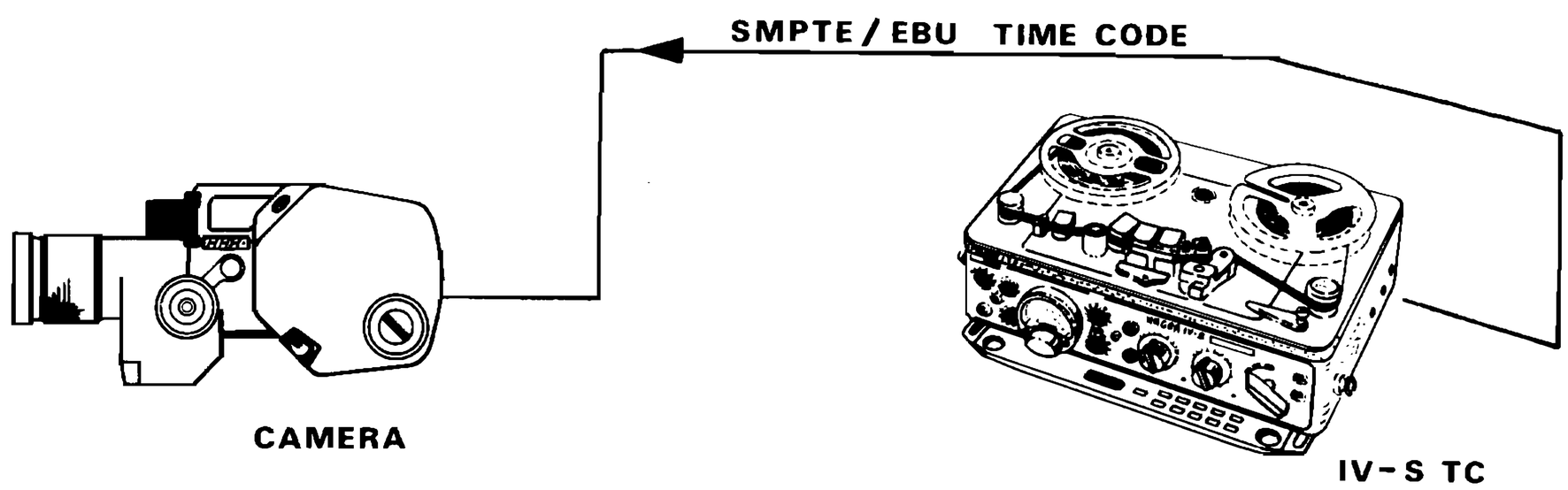

5.8 THE PLAYBACK SHOOT

Music videos are becoming increasingly popular in television productions, and production of a "clip" often requires, like many other types of programs, picture recording during the playback of the already recorded audio. The editing of such a program includes the tedious task of manually synchronizing the pictures and the sound. This usually has to be done without the aid of slate points as they cannot possibly be recorded on the already recorded sound track. Secondly there may possibly be dozens of identical takes all corresponding to the same piece of music. The use of the IV–S TC and its time code facilities can overcome all these problems.

Firstly the MIX MASTER of the audio is received, onto which time code can easily be striped using a centre track time code studio machine, such as the NAGRA T–AUDIO TC, which can now be used as the main editing and synchronizing reference while the IV–S TC plays back a copy of this original (containing the same time code), the transport of the IV–S TC is resolved to the time code generator of the video recorder. This is done for two reasons, firstly to ensure that the sound is replayed at the same speed each time, and also to ensure that the sound time code is in phase with the video signal and hence the video time code, as they are recorded onto the video tape.

The sound time code is also fed to one of the audio tracks of the video recorder, thus giving the video two time codes, one being the reference for the script and the other being the sound synchronization. As both are synchronous to the video, colour framed edits and synchronization are always possible.

To replay a previously recorded time code, put the main function selector in either of the two PLAYBACK positions, the "off tape" time code is then fed to the time code output, the LCD display and the modulometer.

SIGNALS AVAILABLE AT THE TIME CODE OUTPUT

During playback, the system supplies signals on three different connectors all located on the right–hand side of the machine:

PILOT CONNECTOR – Data out and clock out, level –5 to 0 V

CUE CONNECTOR – Sync ref. reference frequency:

76.8 kHz at 30 f.p.s.
64.0 kHz at 25 f.p.s.
64.44 kHz at 24 f.p.s.

TIME CODE CONNECTOR
- 5 pin Lemo
- Bi–phase time code output according to the SMPTE / EBU standard, between 0 and +5 V.
- Time code direct play, –1.5 to +1.5 V

During playback as well as recording, the microprocessor automatically compensates for the distance between the time code and the audio heads (see page IV 1.5–1 for timing details). This offsets the time code signal by different amounts according to the speed of the tape transport, in such a way that the time code and audio signals are always exactly aligned on the TIME CODE OUTPUT. A time code signal is also available on the TIME CODE DIRECT PLAY output, however, this is not corrected and comes directly from the time code head.

In playback the error detection / correction mode is automatically set to 5 INC. (numerical command 109) see page IV 2.5–1.

NOTE: This mode is not remembered, and the machine will automatically return to the previously programmed mode (assuming it differs) as soon as the playback function is stopped.

PLAYBACK OF TIME CODE AT A SPEED OTHER THAN NOMINAL

The time code circuit of the IV–S TC is capable of replaying tapes recorded at nominal speed, and at speeds varying from 0.5 to 6 times the recorded speed. It will display the time code on the LCD display at any speed within this range, and it can also search for time codes within these limits.

NOTE: Time code is available on the time code output at nominal speed only.

5.9 SEARCHING FOR A TIME CODE

The SEARCH TC function permits the retrieval of any time code, whether the value is recorded on the audio tape or whether it is supplied by an external source. Once the value has been located, the machine will emit a single beep, to inform the operator that the chosen point has been reached, however, neither the transport nor the internal generator will stop at this point.

SEARCHING FOR A TIME CODE ON THE AUDIO TAPE

This function relies on the fact that the value to be found is recorded on the tape of the supply reel.

- Press the NUM key and enter the value of the time code to be sought.
- Press the SHIFT key followed by the SEARCH TC key to initialize the search function
- Set the recorder in either of the two PLAYBACK modes.

The tape will now run and a beep signal will be heard when the selected value is read from the tape.

SEARCHING FOR A TIME CODE ORIGINATING FROM AN EXTERNAL SOURCE

- Press the NUM key and enter the value of the time code to be sought.
- Press the SHIFT key followed by the SEARCH TC key to initialize the search function.
- Select SHIFT followed by EXT TC (making sure that a valid time code signal is being fed to the time code input, to prevent ERROR 02 being displayed.

The machine will emit a beep signal as soon as the selected value is read by the external time code reader.

6.1 POWER SUPPLY TO THE TIME CODE CIRCUIT

MEMORY AND CLOCK POWERING

There is a choice of two different modes of memory and internal time code clock powering.

PERMANENT

This mode will conserve the contents of the memory and keep time as long as there is sufficient power supplied to the machine. In this mode 2.8 mA are required when in the STOP position, which corresponds to a battery discharge of 1.92 % per day when using 2.5 Ah batteries.

3 DAYS BACK UP

This mode conserves the contents of the memory and keeps time for three days after the last use of the machine (assuming the power supply allows this). Three days were chosen to allow information to be guarded over a weekend (Friday evening to Monday morning).
This leads to an overall battery drain of 5.76 % for the duration of the back up period. At the end of this period the supply is cut off and the power consumption falls to 560 µA, which corresponds to a battery drain of 0.54 % per day for 2.5 Ah batteries. Despite this tiny current drain, it is recommended to remove the batteries before long periods of storage. When there are only four hours or less remaining before the power to the memory and clock is cut off, a flag can be seen on the display and this warning is accompanied by an audible beep. A second beep will be heard when the 4 hour limit is reached. However, if the machine is in the TEST mode, then the power to the memory will only be cut when the main function selector is returned to the STOP position.

The time code circuit of the IV-S TC is fitted with an extremly large capacitor of 0.22 Farads, which maintains power to the real time clock and the ram memory for a period of two minutes in the absence of batteries, thus allowing flat batteries to be replaced without loss of data. When the machine has been left for a period of time with no power at all, it is necessary to wait for approximately 30 seconds after the first power up for this capacitor to charge up. The time code will remain blank during this time. If this occurs just wait for a short time.

AUTO SELECTION

Switch (3) for internal or external supply, located on the front panel of the IV-S TC has no bearing on the time code circuit. The time code circuit automatically chooses between the internal and external supply depending on which is higher.

For all information regarding batteries and external power supply for the IV-S and IV-S TC please refer to Chapter I of this manual.

7.1 TIME CODE SPECIFICATIONS

GENERAL

Tape width	6.35 mm 1/4"
Audio track width	2 X 2.00 mm
Time code recording level	700 nWb/m pp. ±3 dB (250 nWb/m rms sine wave)
Rise and fall time	65 µs ±10 µs

CROSSTALK

Residual time code on 2 mm audio tracks is below –88 dB

TIME CODE PLAYBACK

Playback speed from 0.5 to 6 times nominal speed

COINCIDENCE ERROR (between audio and time code)

Max 1 time code bit (500 µs) with the EBU standard. (The tape travel time compensation is made internally by the microprocessor)

INPUTS AND OUTPUTS

Input:	Unbalanced, input impedance greater than 100 kOhm
level:	Min 500 mV peak to peak, max 24 V peak to peak
Output:	CMOS logic, + 5 V

GENERATOR

Stability of 1 ppm from +10 to +40°C, which corresponds to an error of one frame in 9 hours operation at 30 frames per second, or 11 hours at 25 frames per second.
Maximum ±2 ppm from –10 to +60°C

POWER CONSUMPTION OF TC CIRCUIT

26 mA full operation
2.8 mA standby
560 µA Stop mode

8.1 APPENDIX "A" DROP FRAME

In video the time code generator is locked to the video signal. In other words, the time code and the video image advance at exactly the same rate.

For black and white television (monochrome) in America, the frame rate is 30 frames per second. On the other hand, the american colour television system does not actually use a whole number of frames per second, as the NATIONAL TELEVISION STANDARD COMMITTEE has, in fact, fixed its frame rate at 29.97 frames per second (or more exactly 29.97002617 frames per second). This means that a signal measured at 30 frames per second would have a delay of 0.03 frame each second. Thus, at the end of one hour of recording, the cumulative timing difference between a clock, and the code recorded on the tape, would be 108 frames or 3.6 seconds.

In order to restore the time code reading and make it correspond to real time, the television industry has developed the DROP FRAME compensation system.

The problem is to find a way to lose 108 frames per hour and the solution adopted by the NTSC was not to count the first two frames (00 and 01) at the start of each new minute. If the calculation is now made, 120 frames would be lost each minute. However, this is twelve frames too many that have been ommited during one hour's recording. In order to recover these twelve frames it was decided to count the first two frames every tenth minute.

To summarize this, when using the DROP FRAME mode, the NTSC system eliminates the counting of two frames each minute, except in minutes 00, 10, 20, 30, 40 and 50.

Passage of minutes hh.mm.ss.ff	**Passage of tenth minute hh.mm.ss.ff**
12.45.59.28	12.49.59.28
12.45.59.29	12.49.59.29
12.46.00.02	12.50.00.00
12.46.00.03	12.50.00.01
12.46.00.04	12.50.00.02

This mode thus permits the recording of time code that advances at the same rate as the clock. All calculations of the duration based upon the compensated code will be corrected except for the fact that the standard is not exactly 29.97 (see above) and the drop frame mode will accumulate an error of 75 ms per day.

9.1 APPENDIX "B" SOFTWARE EVOLUTION

The time code section of the IV–S TC is essentially a microprocessor controlled system, which performs numerous functions. Thus, the time code system is software based, which makes it a very flexible system in view of practical applications. It also allows for future modifications to the system, should future developments in the field of time code require it.

The updates of the software have been grouped wherever possible to minimize the number of software versions. It is not necessary to open the IV–S TC to inspect the version of software installed, as this can easily be done via the STATUS mode followed by the NEXT ST key four times, as explained on page IV 2.4–1.

When this is on the display, the first digit indicates the hardware compatibility, and the second digit indicates the version itself. This means that a software version 1.X can be replaced by version 1.X + 1 without (or possibly minor) modifications to the hardware. However, significant modifications may be needed on the time code circuit before version 2.X can be installed.

This section of the manual is designed to give a short description of the differences between the versions of the software.

SOFTWARE BULLETIN
NAGRA IV-S TIME CODE
VERSION 1.93 TO 1.96

1. INTRODUCTION

This bulletin describes modified operating characteristics implemented in the Nagra IV-S TC with software version V1.93, V1.94 and V1.96. Note that V1.95 is the "beta-test" version of V1.96.

2. NEW FUNCTIONS

(V1.94, V1.95, V1.96)

Two more numerical codes have been implemented :

NUM 202 : time code output = all "0", that means a square wave signal at 1kHz (at 25 fr/s);

NUM 203 : time code output = all "1", that means a square wave signal at 2kHz (at 25 fr/s);

in order to facilitate measurements on the time code signal or the creation of test tapes.

NUM 202 makes an "Error 08" and NUM 203 makes an "Error 09" message to appear on the display to make the user aware that the machine has entered into a special test mode and is in an abnormal working condition. Exit from one of these modes is done by NUM 200 (=reset the machine) or easier by STOP.

These numerical functions must normally be used only for factory test purpose.

3. TIME CODE GENERATOR

(V1.93, V1.94, V1.95, V1.96)

In the previous software versions, the NUM 000 (= escape) had a side-effect : it cancelled the NUM 102 (= disable setting) mode, as if a NUM 103 (= enable setting) was performed. This has been corrected.

(V1.95, V1.96)

- If the machine is set to internal time code generator (INT TC) and if the generator is set to the "hold" mode (NUM 100), the time code will be incremented anyway when entering in the RECORD mode, and will be stopped again when leaving this mode (back to TEST). This avoids the user to have a "frozen time code" on the tape if he forgot to cancel the NUM 100, and provides an interesting new feature : as the time runs only during the recording, it is then possible to have a kind of "continuous" time code on the tape (however, with some drops when stopping/starting the machine).
- The "start tc" command (NUM 101) restarts the internal time code as before, and it also reloads AND NOW RESYNCHRONISES the real-time clock (which keeps the time when the IV-S is turned off). Then no "time delta" will be seen at the time code output if the IV-S is turned off and on again. Note that when a time code is entered from the keyboard the frames are ignored (= 00), and this is the same when performing a "NUM 101" : the time code is restarted with frames = 00. However, if the time code was already running, NUM 101 has no effect.

WARNING: NUM 101 does NOT work properly with V1.95 if user bits are not set at 00000000! This has been corrected on V1.96.

4. TIME CODE READER

(V1.95, V1.96)

Correction of the following idiosyncrazy : if the machine was in the EXT TC mode and if the internal generator was set to the "hold" mode, it was possible, if a STOP was done, that in the RECORD mode the recorded time code was "frozen", although a normal running time code was displayed.

This has been corrected.

5. RS-232 COMMUNICATION

(V1.95, V1.96)

- If the time code generator is set to the "hold" mode, the first RS-232 communication do the equivalent of a "start tc" (NUM 101). - The IV-S TC answers now "IDLE" when it receives an enquiry "ENQ" after a complete reset (NUM 200). A non-initialized AATON clock "Origin C" will display "Void" in this case, although the data link is ok. When the link is not ok, it displays also "Void", but with a noticeable delay.

6. MISCELLANEOUS

(V1.95, V1.96)

Some operation modes have been modified :

- It is now possible to switch from EXT TC to INT TC even in the PLAY mode. The EXT TC mode displays the external time code if any, "Error 02" if no. The INT TC mode displays the time code read from the tape. In previous software versions, it was necessary to have switched on INT TC in the TEST mode to be able to read the time code from the tape in the PLAY mode.
- If a SET FROM EXT is attempted when no external time code is present, an "Error 02" message is displayed, instead of a "frozen" time code. It is not necessary anymore to make a "NUM 000" (or SHIFT EXECUTE) to exit.

However, it is still necessary to switch to INT TC again.

(V1.96)

- No more "beep" on loudspeaker after power-up or some operations like SET FROM EXT, RESET, ENTER, etc... , unless it is requested through NUM 001 (beep on loudspeaker). This is to keep silence when operating... however, the headphones "beep" remains anyway.

<u>NOTE :</u> in the AUTO SET mode, the IV-S is automatically set to the EXT TC mode and it is then possible to feed it with an external tc (which will set the internal generator) but it is **not** possible to set another device from the IV-S, because the time code output has a little "delta" in this mode (compensation of the distance between heads). Setting a device from a IV-S is possible **only** in the TEST and INT TC modes, so a NUM 111 is required first to exit from the AUTO SET mode.

EPROM checksum : E0AE for V1.96, DC63 for V1.95

NAGRA KUDELSKI
Olivier Bodenmann

NAGRA

CHESEAUX,11,30.1992

SOFTWARE BULLETIN
NAGRA IV-S TIME CODE
VERSION 1.99

INTRODUCTION
This bulletin describes modified operating characteristics with software V 1.97.
MODIFICATION
Correction of all Bugs from V 1.98.
Correction of the 29,97 dF and 30 dF.
IN 30 dF the Time Code increment correctly and in 29,97 dF no more lost of the Time when the machine is stopped more than 24 hours.

Service After Sales

ACCESSORIES 5

CHAPTER V "ACCESSORIES"

TABLE OF CONTENTS

Please refer to your instruction manual :

- Nagra IV-S — No 20 06 004 161
  Chapter 2 — page 30 to 67

- Nagra IV-S TIME CODE — No 20 06 007 161
  Chapter 3 — page 3-1 to 3-34

May 1991

CHAPTER V "ACCESSORIES"

TABLE OF CONTENTS

Model	Description	Page number
Configurator	Modulation audio and cue and power supply	V 1
Configurator	Synchronization and accessories	V 2 – 3
ATN–3	Mains power supply	V 5
ATN–3C	Mains power supply and charger	V 5
MAG 220 V	Electronically controlled degausser 220–240 V	V 7 – 8
MAG 110 V	Electronically controlled degausser 110–117 V	V 7 – 8
DSM	Portable battery/mains powered monitor	V 9 – 10
QGB	10½" (26,67 cm) reel adapter	V 11 – 12
QSIP	Resolver interface	V 13 – 14
QSIA	Aaton interface	V 15
QSCM–2	Commentary microphone with ALC	V 17 – 18
QSEF	External preamplifier with balanced input	V 19 – 20
QSGX–3	Switchable crystal pilot generator 50–60 Hz	V 21
QSHZ	Unbalanced high impedance external amplifier	V 23 – 24
QSLS	Pilot synchronizer for NAGRA IV–S	V 25 – 26
QSNES	Accessory with balanced inputs and outputs for insertion of a noise reduction system	V 27 – 28
QSQC	External parallel connecting unit for NAGRA IV–S	V 29 – 30
QSSC	Synchronizer for slide projector	V 31 – 32
QSSF	External balanced output amplifier for NAGRA IV-S and IV-SJ	V 33 – 34
QSV–2	Speed varier for NAGRA IV-S, IV-SJ and 4.2	V 35
QTIM	Tape driven timer	V 37
QLEN	Tape driven counter	V 37
QRAC	Tape cleaning blade	V 37
PA–4	Set of twelve 4 Ah rechargeable cells	V 37

NAGRA IV–S

CONFIGURATOR

Modulation audio and cue and power supply

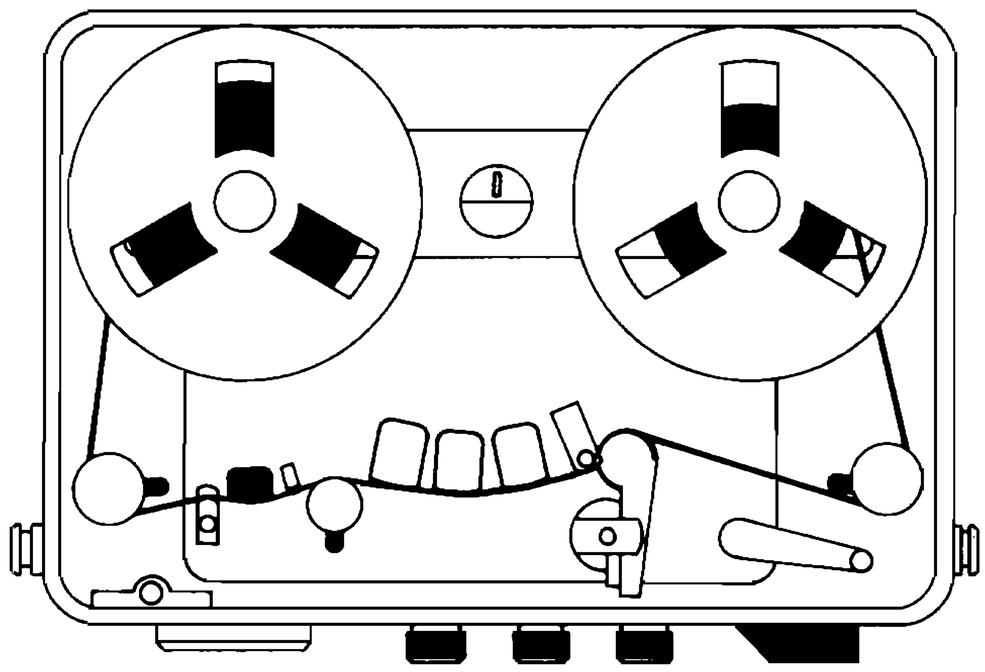

Modulation input

QSHZ	16400	Unbalanced high impedance external amplifier
QCSE	16900	Line input cable
QSEF	16425	External preamplifier with balanced input
QSNES	16525	Accessory with balanced inputs and outputs for insertion of noise reducing system
QSQC	16500	Parallel connection unit for 2 to 4 NAGRA IV–S
QCQC	16509	Additional cable for connecting a 3rd or 4th NAGRA to the QSQC
QSCM–2	16025	Commentary microphone with ALC
QSSC	16475	Synchronizer for slide projector
QSSF	16450	Amplifier with balanced outputs
QCSS	16901	Line output cable with banana plugs
QCSSC	16902	Line output cable with CINCH plugs
QCSSD	16903	Line output cable with DIN plug
QCSR	16905	Cable to transfer sound from one IV–S to another

Power supply

ATN–3	14375	Mains power supply
ATN–3C	14376	Mains power supply and charger
QCAS	98001	Mains cable with swiss plug
QCAW	98003	Mains cable without mains plug
PPD	14150	Multiple connection box
PA–2.5	98251	Set of fifteen 2.5 Ah rechargeable cells with extension
PA–4	98254	Set of twelve 4 Ah rechargeable cells

June 1988

NAGRA KUDELSKI
CH-1033 Cheseaux / Lausanne

NAGRA IV.S

Configurator

modulation audio and CUE and power supply

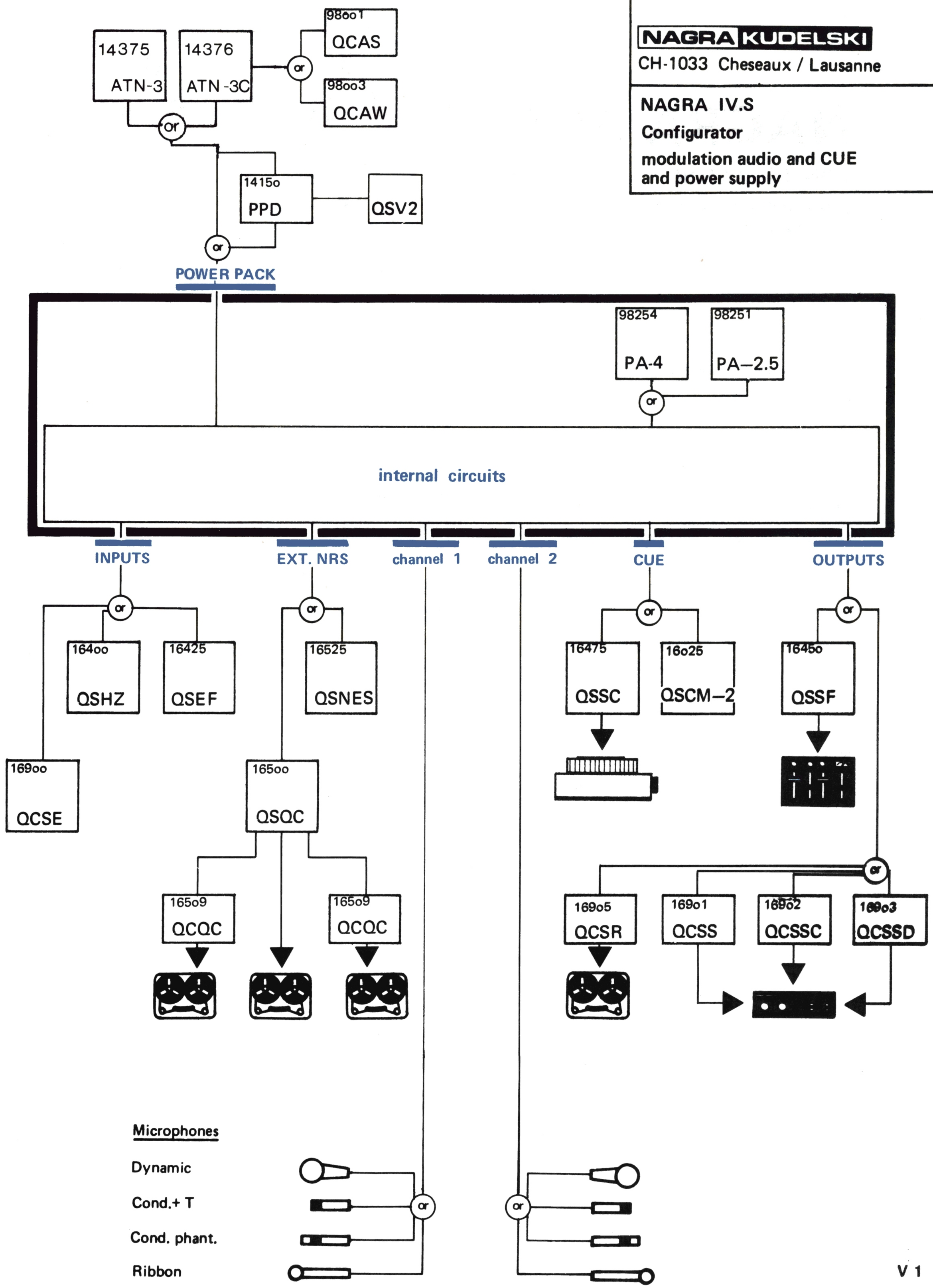

V 1

NAGRA IV–S

CONFIGURATOR

Synchronization and accessories

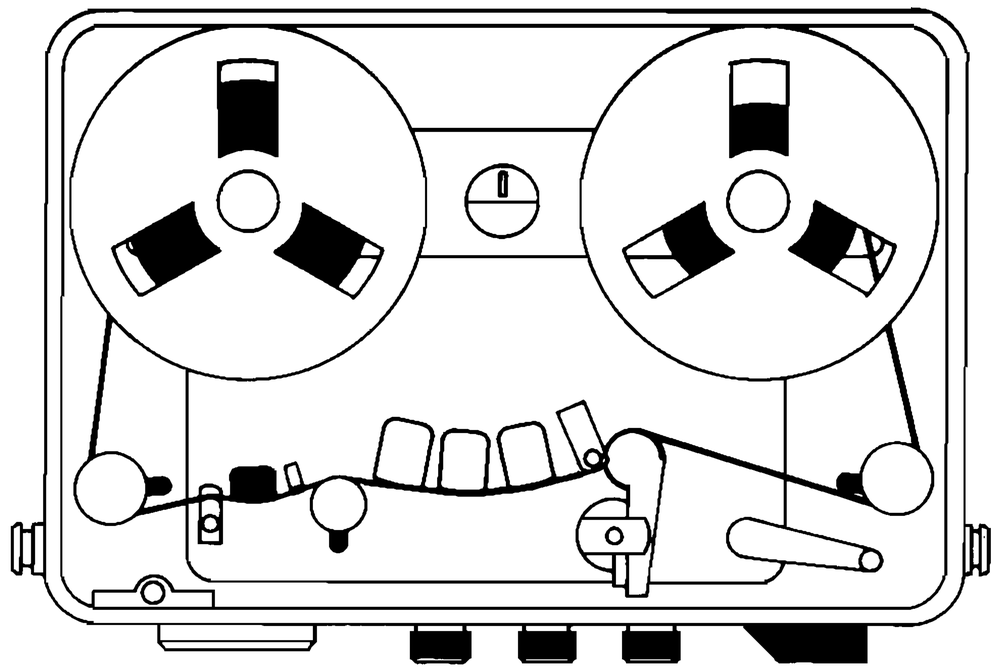

External electro–accessories

QCA	14102	Start–stop cable for remote control
QGB	14001	10½" (267 mm) reel adapter
TPBC	18907	Cine–type reel holder
QGBN	14006	NAB–type hub holder
QGBA	14007	AEG–type hub holder
DSM	14700	Field monitor and amplifier
IACC	17910	Rechargeable cells unit for DSM monitor
MAG–220	90801	Electronically–controlled degausser 220–240 V
MAG–110	90802	Electronically–controlled degausser 110–117 V

Mechanical accessories

QRAC	06260	Tape cleaning blade
QLEN	14655	Tape driven counter graduated in feet
QTIM	14650	Tape driven timer
QSET–2	14130	Lid for 7" (178 mm) reels

Carrying cases

QTS	99027	Standard carrying case with pocket
QTS–C	99225	Special QTS top half for QSET–2 lid
QHC–2	14127	Spare carrying strap
QHP	14120	Carrying handle
QHCP–2	14123	Special strap for carrying a recorder equipped with a QHP handle

Headphones

DT48ST	96241	Beyer DT 48–ST stereo–headphones

Internal electro–accessories

QFMS50	06780	Frequency meter for 50 Hz pilot signal
QFMS60	06781	Frequency meter for 60 Hz pilot signal
QSGX–3	06697	Switchable crystal pilot generator 50–60 Hz

Synchronization

QCLS	16300	Adapter for connecting an SLO to a NAGRA IV–S
SLO	13400	Automatic synchronizer with cathode ray tube for visual check
SLQ–3	13429	Crystal pilot generator for SLO
QSV–2	14600	Manual speed variator
QSLS	16350	Synchronizer for NAGRA IV-S

Camera cables

QCE	14107	For connecting a NAGRA IV–S to an Eclair NPR camera
QCX	14108	For connecting a NAGRA IV–S to an Arri ST/BL or a Bolex 16 RPO camera

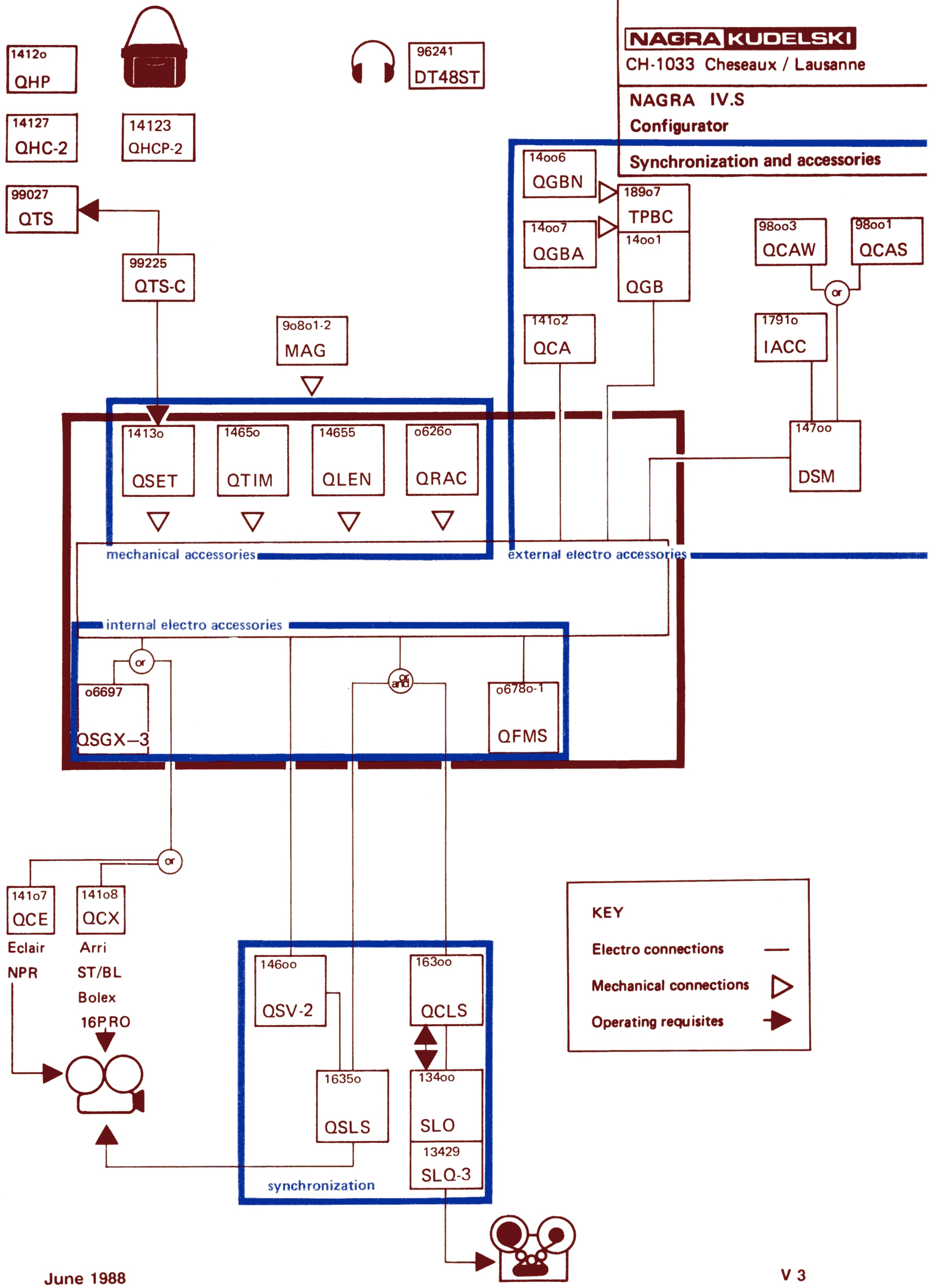
NAGRA KUDELSKI
CH-1033 Cheseaux / Lausanne
NAGRA IV.S
Configurator
Synchronization and accessories
1412o
QHP
14127
QHC-2
14123
QHCP-2
96241
DT48ST
99027
QTS
99225
QTS-C
9o8o1-2
MAG
14oo6
QGBN
14oo7
QGBA
189o7
TPBC
14oo1
QGB
98oo3
QCAW
98oo1
QCAS
or
141o2
QCA
1791o
IACC
147oo
DSM
1413o
QSET
1465o
QTIM
14655
QLEN
o626o
QRAC
mechanical accessories
external electro accessories
internal electro accessories
o6697
QSGX–3
and
o678o-1
QFMS
141o7
QCE
Eclair
NPR
141o8
QCX
Arri
ST/BL
Bolex
16PRO
146oo
QSV-2
163oo
QCLS
1635o
QSLS
134oo
SLO
13429
SLQ-3
synchronization
KEY
Electro connections
Mechanical connections
Operating requisites

ATN-3

MAINS POWER SUPPLY
14375

ATN-3C

MAINS POWER SUPPLY AND CHARGER
14376

ATN–3 ATN–3C

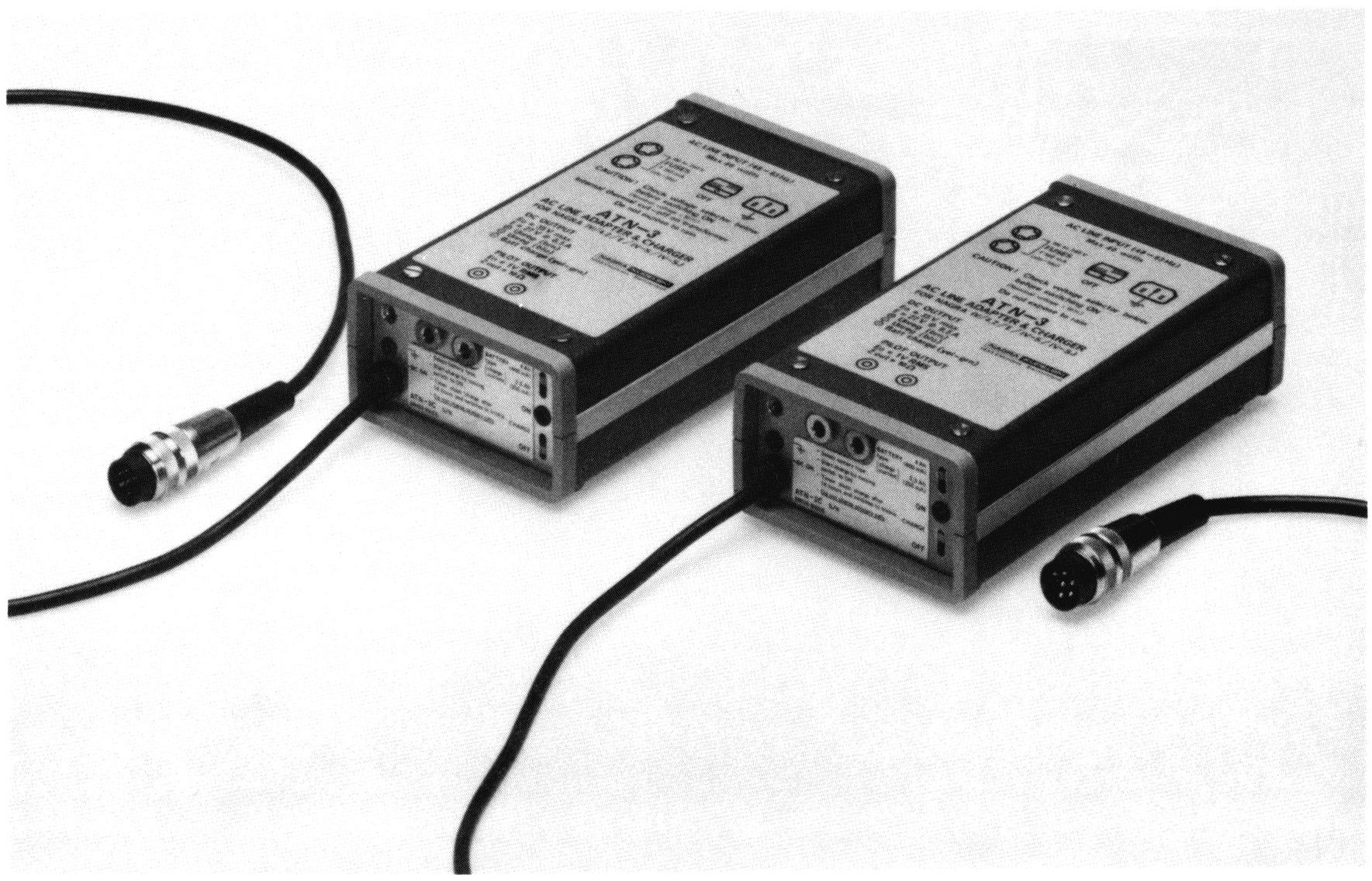

ATN–3 Mains power supply for NAGRA IV–S, IV–SJ, 4.2 and E (110 to 240 V, 50 or 60Hz). Also supplies a mains frequency pilot signal of 1 V RMS.

SPECIFICATIONS

Output voltage , unloaded	35 V
Nominal output voltage	27 V
Nominal output current	0.5 A
Maximum current	1 A

Meets the following safety requirements: UL 1012, IEC 65 (= VDE 860)

Supplied with a mains cable

Dimensions	153 x 82 x 46 mm (6 x 3 3/4 x 1 3/4 ")
Weight	880 g (2 lbs)

ATN–3C Same specifications as above but including a 2–position charger for 2.5 Ah and 4 Ah cells, and a timer automatically switching to trickle charge after 14 hours.

Can be used to power a NAGRA while simultaneously charging its accumulators.

Note: In order to activate the charger function of the ATN–3C, always place the small charger slide–switch to the "OFF" position and then to charge, after having connected the ATN-3C to the mains and switched it on.

MAG

ELECTRONICALLY CONTROLLED DEGAUSSER
90801 (220–240 V)
90802 (110–117 V)

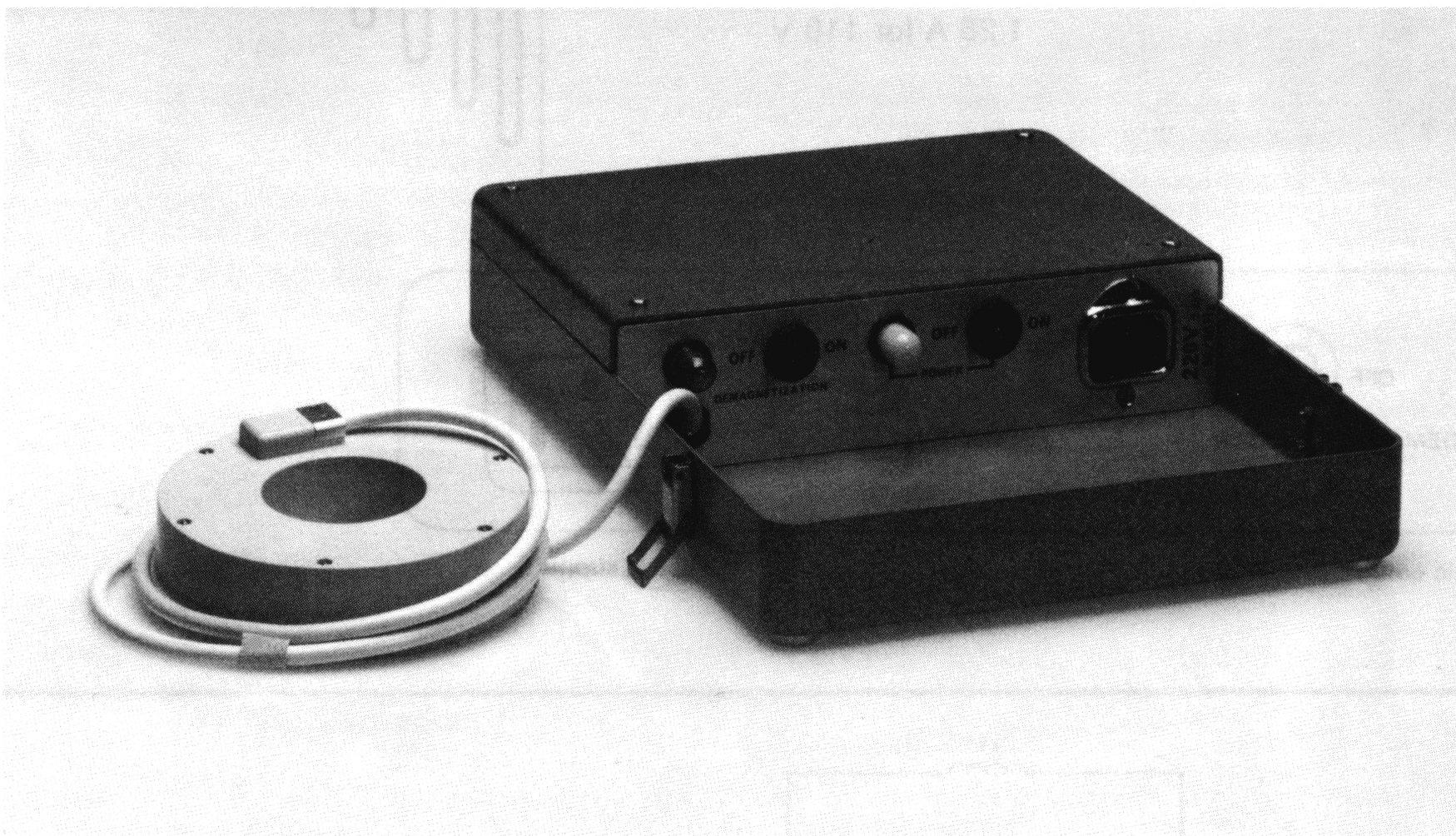

Operating instructions

It is advisable to switch off the recorder completely to prevent damage caused by the voltage induced in the heads to the amplifiers.

Preparation

After removing its cover plate, mains powering the MAG and switching it "ON" place the coil on the heads or on the parts which are to be demagnetized.

Operation

The demagnetization switch being in the "OFF" position, throw it to "ON": the indicator lights up and slowly goes out. When the light is off, switch back to "OFF". Repeat the operation three or four times to ensure a thorough demagnetization.
The MAG is an electronically controlled degausser for recorder heads and mechanical parts which are in continuous contact with the tape.

There are two versions:

MAG 90801 220 – 240 Volts mains
MAG 90802 110 – 117 Volts mains

SPECIFICATIONS

Mains supply	220 to 240 V or 110 to 117 V
No load power consumption	10 mA
max. power consumption:	
peak current	300 mA
Max. field strength	270 gauss
Field strength after 100 ms	135 gauss
FST fuse standard	630 mA for 220 V 1.25 A for 110 V

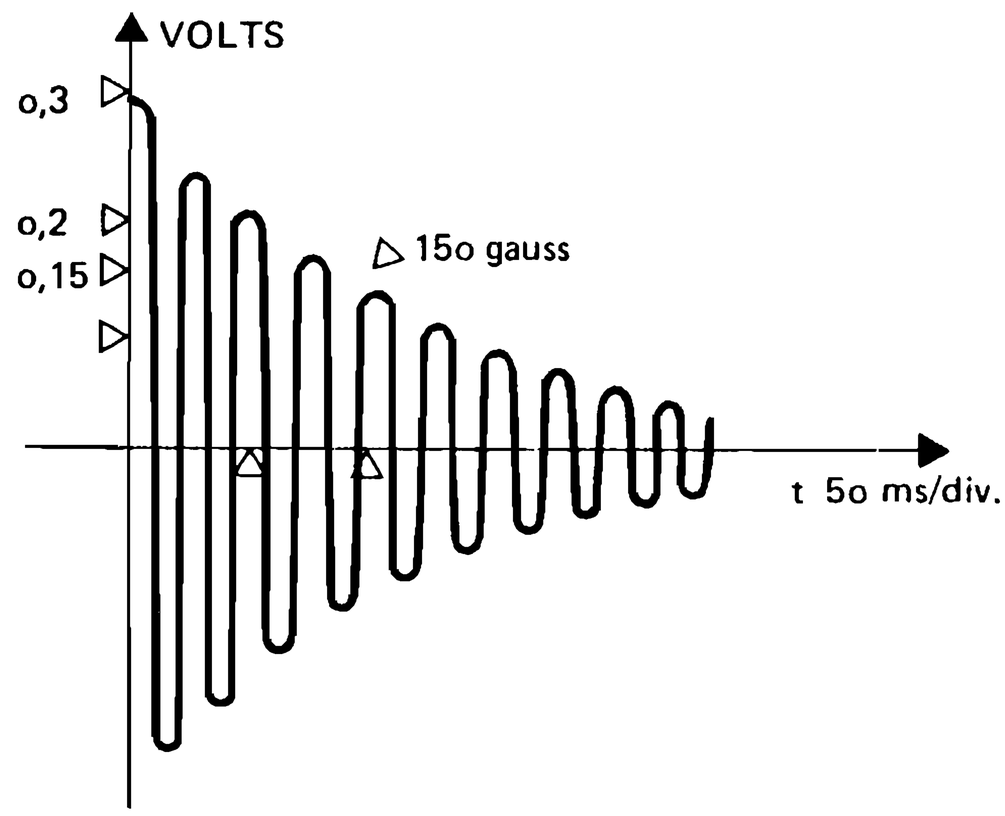

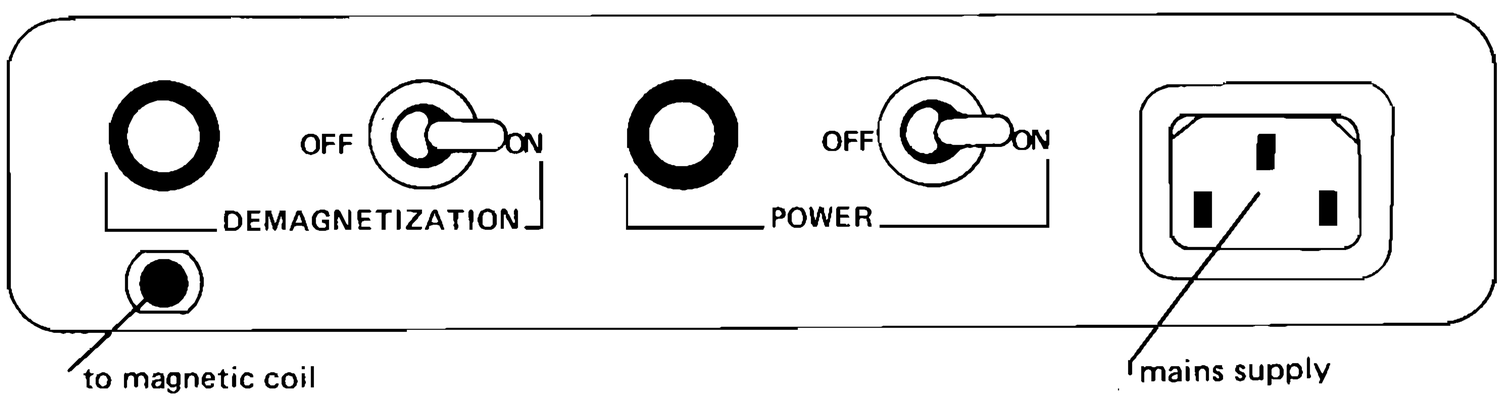

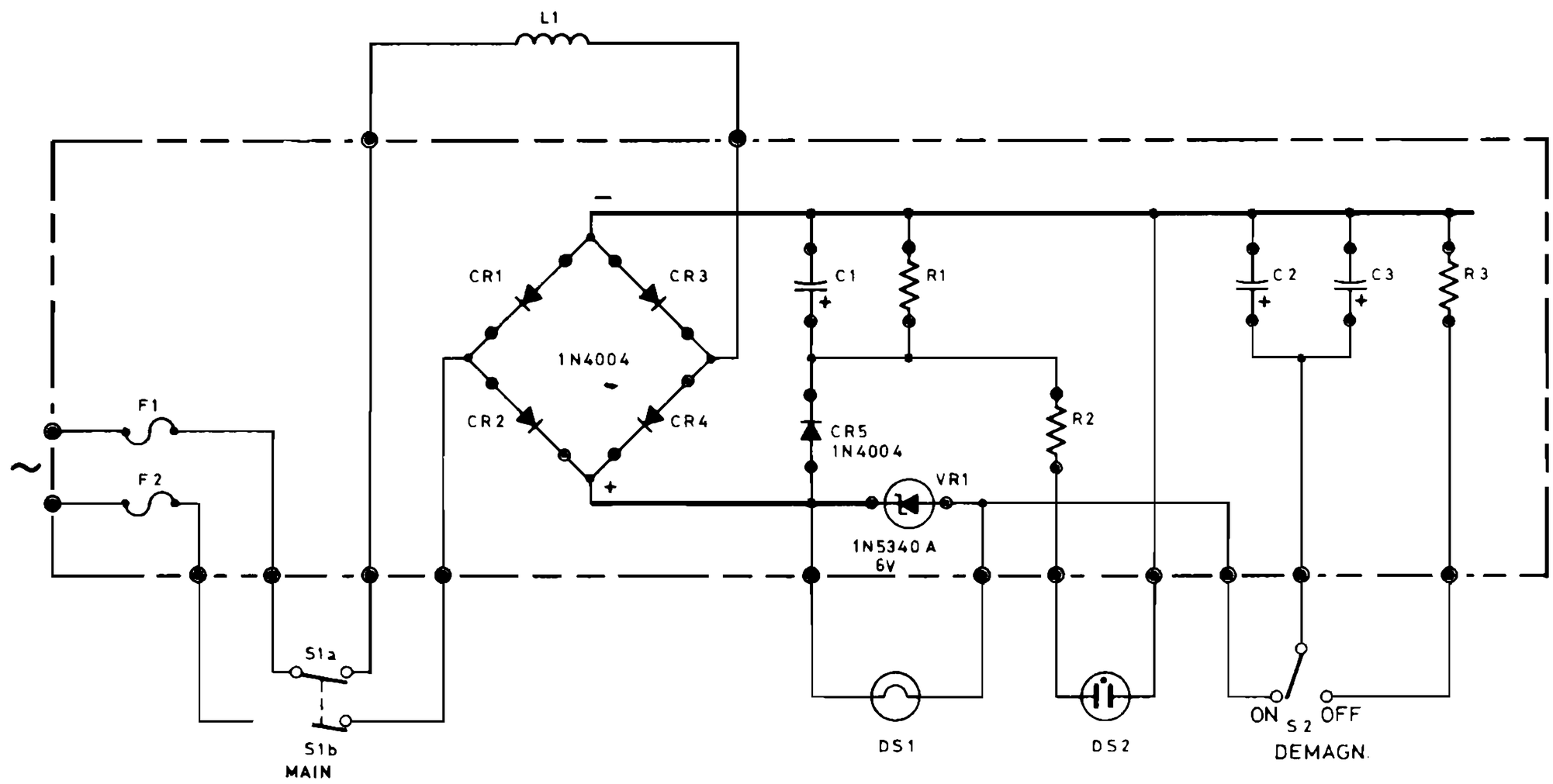

ALL RESISTORS ± 5 %

~	R1	R2	R3	C1	C2	C3	L1	F1	F2
110 V 117 V	100K 1W	0	33 Ω 10 W	25 µF 400V	590 µF 200 V	590 µF 200V	1035 sp ø 0,4 L 3,3	1,25 A	1,25 A
220 V	100K 2W	68K 1 W	100 Ω 10 W	25 µF 400V	290 µF 400 V	290 µF 400 V	2070 sp ø 0,4 L 3,3	630 mA	630 mA

CIRCUIT DIAGRAM

DEMAGNETIZER MAG

DSM MONITOR

NAGRA DSM PORTABLE BATTERY / MAINS POWERED MONITOR / LOUDSPEAKER 14700

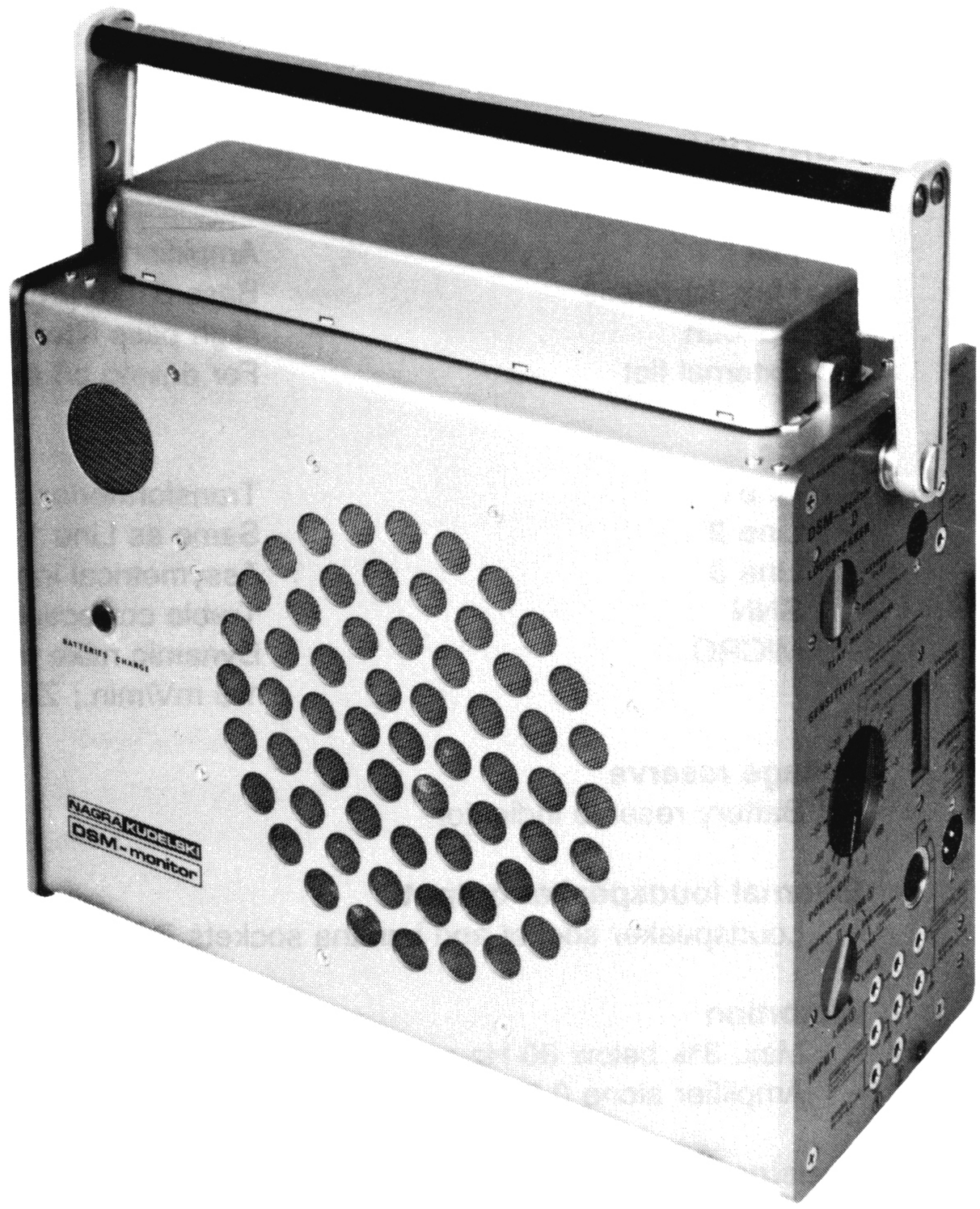

Applications

High quality sound reproduction for mobile installations, playback filming, independent powering using rechargeable nickel–cadmium batteries. Thanks to its dynamic microphone input the DSM can also be used as a public address speaker.

SPECIFICATIONS

Powering

- Mains powering 110 or 220 V ±20%, 48 to 440 Hz, or +11 to +30 V, with built–in short –circuit protection.

Consumption

- 20 mA (without input signal)
- 240 mA max signal output
- Nickel–cadmium rechargeable battery pack IACC 12 V 1.8 Ah ensuring approximately 9 hours of operation at average level
- The IACC can be recharged by the DSM.

Amplifier

Sine power 7 W powered by fully loaded rechargeable cells.

Sine power 15 W min: when powered by external power supply.

Frequency range	60 Hz – 15 Hz ± 4 dB
External loudspeaker output	60 Hz – 20 kHz ±0 dB, –3 dB

Loudspeakers
- The DSM is equipped with 2 speakers, the crossover frequency being 2.2 kHz
- Low frequency resonance correction for built–in woofer giving an extremely flat response curve
- Very efficient speakers ensuring low battery drain
- The amplifier can drive an external speaker

FUNCTIONS

Loudspeaker

– Flat	Amplifier and loudspeaker
– Max. loudness	Bass cut to prolong battery life
– Speech	High pass filter (300 Hz) for better voice rendering
– External flat	For driving an external loudspeaker

Inputs

– Line1	Transformerless symmetrical input 0.4 V, Z = 47 kOhm
– Line 2	Same as Line 1
– Line 3	Assymetrical input 0.1 V, Z = 27 kOhm
– SNN	Treble correction for 1 7/8 ips
– MICRO	Dynamic mike transformerless symmetrical input 1.6 mV/min.; Z = 1.5 kOhm

Voltage reserve
- Battery reserve indicator

External loudspeaker output
- Loudspeaker socket and banana sockets Z = 8 Ohm, P = 20 W max.

Distortion
- Max. 3% below 80 Hz and better than 1% for frequencies above 80 Hz
- Amplifier alone 0.3% from 60 Hz to 16 kHz

Housing
Manufactured from semihard aluminium, the rear of the housing is reinforced to avoid vibrations. The housing is splashproot.

Dimensions	320 x 130 x 240 (12 5/8 x 5 1/8 x 9 3/8")
Weight	6.3 kg (13 lb 14 oz) without batteries

QGB

10 1/2" REEL ADAPTER
14001

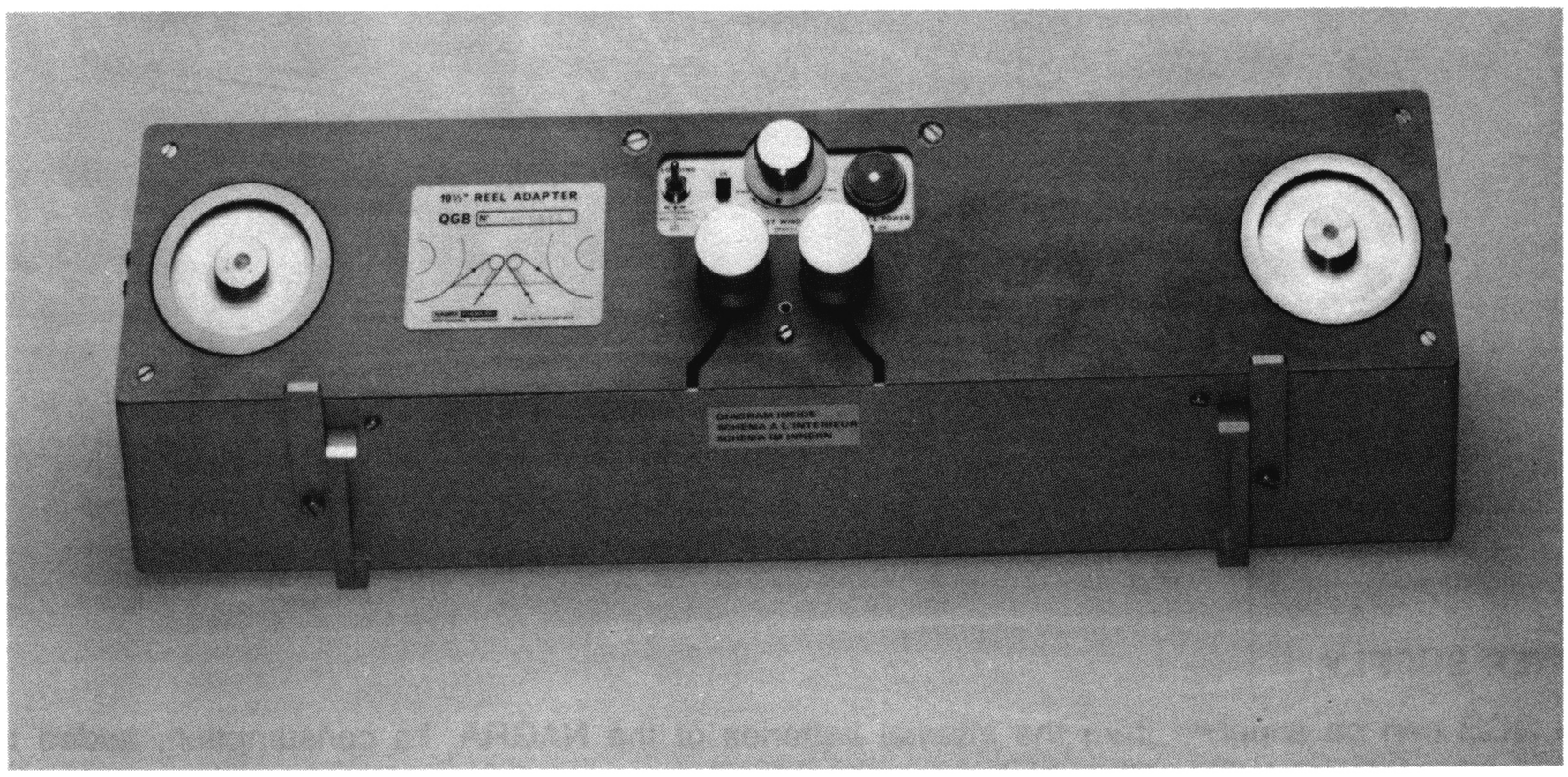

DESCRIPTION

The QGB adapter is an accessory developed for NAGRA self–contained monophonic, stereophonic and instrumentation recorders model E, 4.2, IV–S and IV–SJ. It permits the use of 10½" (267 mm) reels with cine-type reel holder and flanges with NAB or AEG–type hubs, which can hold 2400 ft (730 m) of 2 mil (50 µ) tape giving about 1 hour of recording. This very sophisticated unit is fully automatic. The QGB ensuring a stable tape speed and very fast forward and rewind functions, smaller reels can also be used with advantage. The reel supports accept interchangeable adapters fitting all existing types of hubs. These are coupled to the servo–motors controlled by the tensiometers, maintaining the tape tension within very narrow limits.

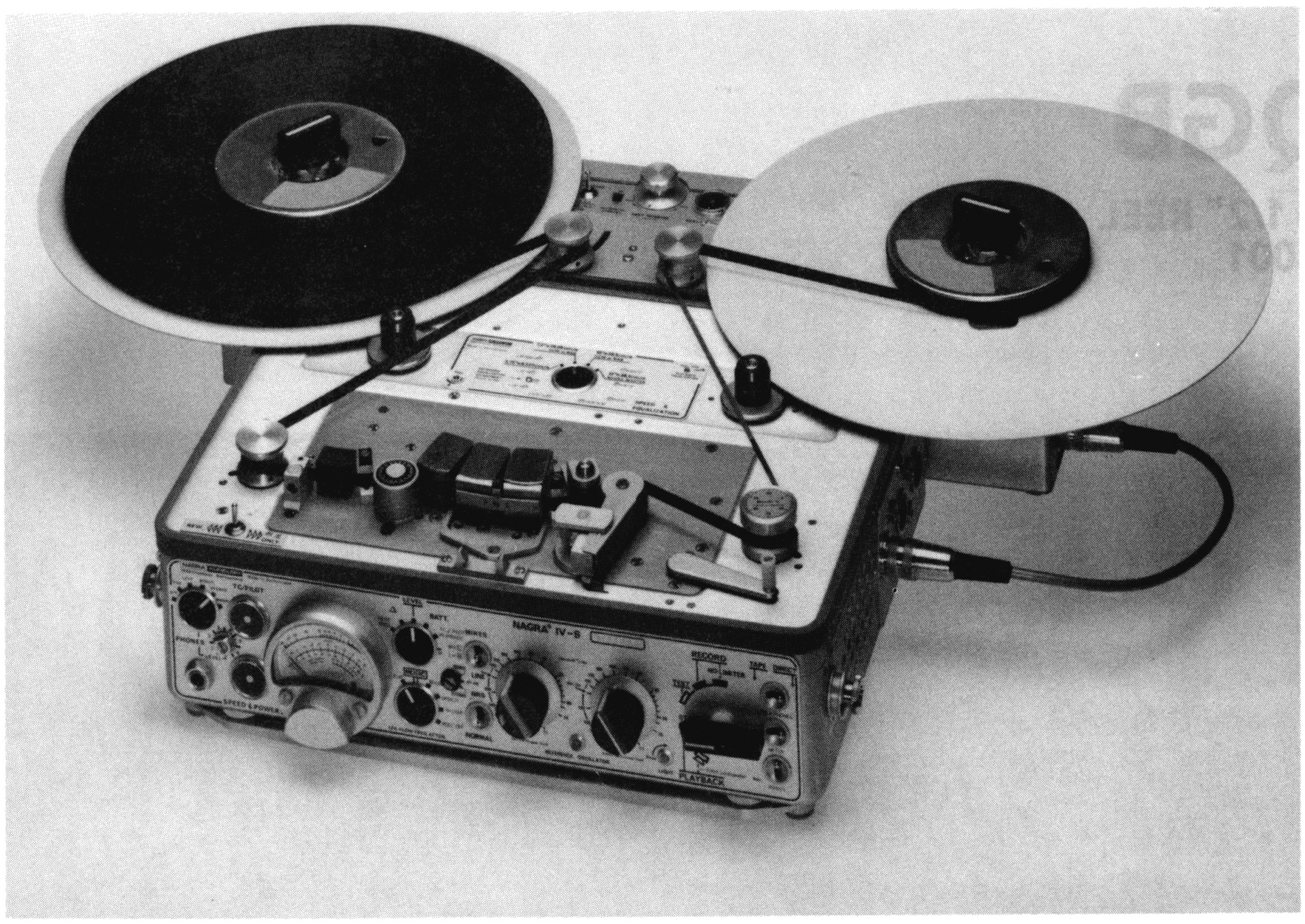

POWER SUPPLY

The QGB can be supplied from the internal batteries of the NAGRA. Its consumption, added to that of the recorder being rather high, we recommend the use of rechargeable or large capacity batteries (alkaline or manganese cells). The NAGRA–QGB system can also be powered by an ATN–3 mains power supply (or equivalent) which connects to the "power" socket of the QGB. In order to avoid unnecessary battery drain, the QGB is equipped with an Automatic Stand–By switch. In OFF position the QGB is continually operative, whether the tape is transported or not. This is the position normally used with the holding brakes locked, whenever the tape stops. Power consumption is then very low. The action of the holding brakes at the time of each start and stop of the tape produces a light click. In case this click is disturbing, the OFF position should be used, despite the increased consumption.

SPECIFICATIONS (Typical values)

Dimensions 435 x 96 x 110 mm (17 1/8 x 3 7/8 x 4 3/8")	
Operating temperature	0 – 70°C (32 – 158°F)
Weight	3 kg (6 lbs)
Rewinding time:	
(ATN–3, 26.5 cm (10 ½") reels 730 m (2400')	
Full reel	2 min
Half reel	1 min

Power supplied by fully charged cells in NAGRA: rewinding times multiplied by 2.5

Power consumption

Normal transport	220 mA
Fast winding	300 mA
Stand–by	5 mA
Stop (without tape)	1 mA

Power reserve with rechargeable cells installed in NAGRA.
Recording and rewinding

4 Ah cells	8 h
2.5 Ah cells	5 h

QSIP

RESOLVER INTERFACE
16550

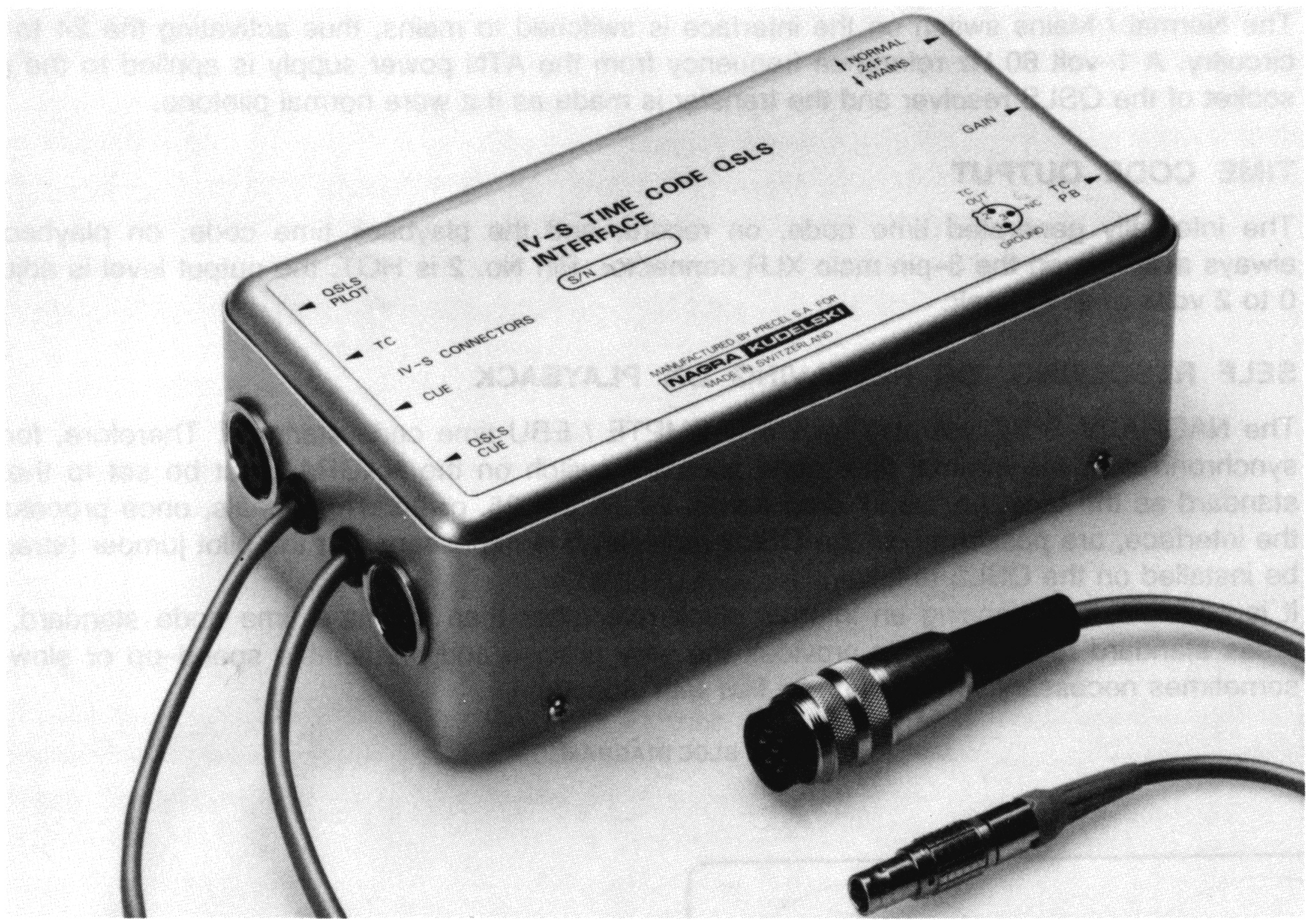

The QSIP resolver interface is an operationally transparent box which is installed between the NAGRA IV–S TC and the QSLS resolver.

FUNCTIONS

– to process the played–back SMPTE time code and internal clock outputs into signals which the QSLS resolver can read as normal pilot

– to provide a 24 frame time code to 60 Hz conversion for resolving time code tracks to mag film in normal pilotone fashion

– to provide a buffered, variable level output of either recorded or played–back time code on a standard 3–pin XLR connector.

ATTACHMENT

The interface is attached by plugging the LEMO connector into the mating time code connector on the NAGRA IV–S TC and connecting the TUCHEL 3-pin connector to the cue socket of the NAGRA. The pilot and cue connectors on the QSLS are plugged into their respective receptacles on the interface.

OPERATION

The only operating controls are the screwdriver–adjustable gain control for the time code output level, and the toggle switch to select normal operation (or 24 fps to 60 Hz conversion).

RESOLVING TO AN EXTERNAL TIME CODE

The external reference time code will have to be reduced to its field rate before being suitable as a resolving standard. Most time code generators can provide this. The field rate is twice the frame rate, therefore 24 becomes 48, 25 becomes 50, 30 becomes 60 and 29.97 becomes 59.94. The field rate signal is applied to the external pilot input connector on the QSLS resolver.

RESOLVING 24 fps TIME CODE FOR SYNC TRANSFER TO MAG FILM

The Normal / Mains switch on the interface is switched to mains, thus activating the 24 to 60 Hz circuitry. A 1–volt 60 Hz reference frequency from the ATN power supply is applied to the pilot–in socket of the QSLS resolver and the transfer is made as if it were normal pilotone.

TIME CODE OUTPUT

The internally generated time code, on record, and the playback time code, on playback, are always available on the 3–pin male XLR connector. Pin No. 2 is HOT, the output level is adjustable 0 to 2 volts peak to peak.

SELF RESOLVING, OR RESOLVING ON PLAYBACK

The NAGRA IV–S TC will play back any SMPTE / EBU time code standard. Therefore, for exact synchronization the internal time code standard switch on the NAGRA must be set to the same standard as the tape, i.e. 29.97 drop frame, 29.97, 30, 25, or 24. The signals, once processed by the interface, are passed on to the QSLS resolver. It is necessary that the pilot jumper (strap plug) be installed on the QSLS resolver.
It is possible, by choosing an internal clock rate other than the tape time code standard, to do cross standard resolving. This provides the very precise and predictable speed–up or slow–down sometimes necessary when matching film with videotape.

QSIP FUNCTIONAL BLOC DIAGRAM

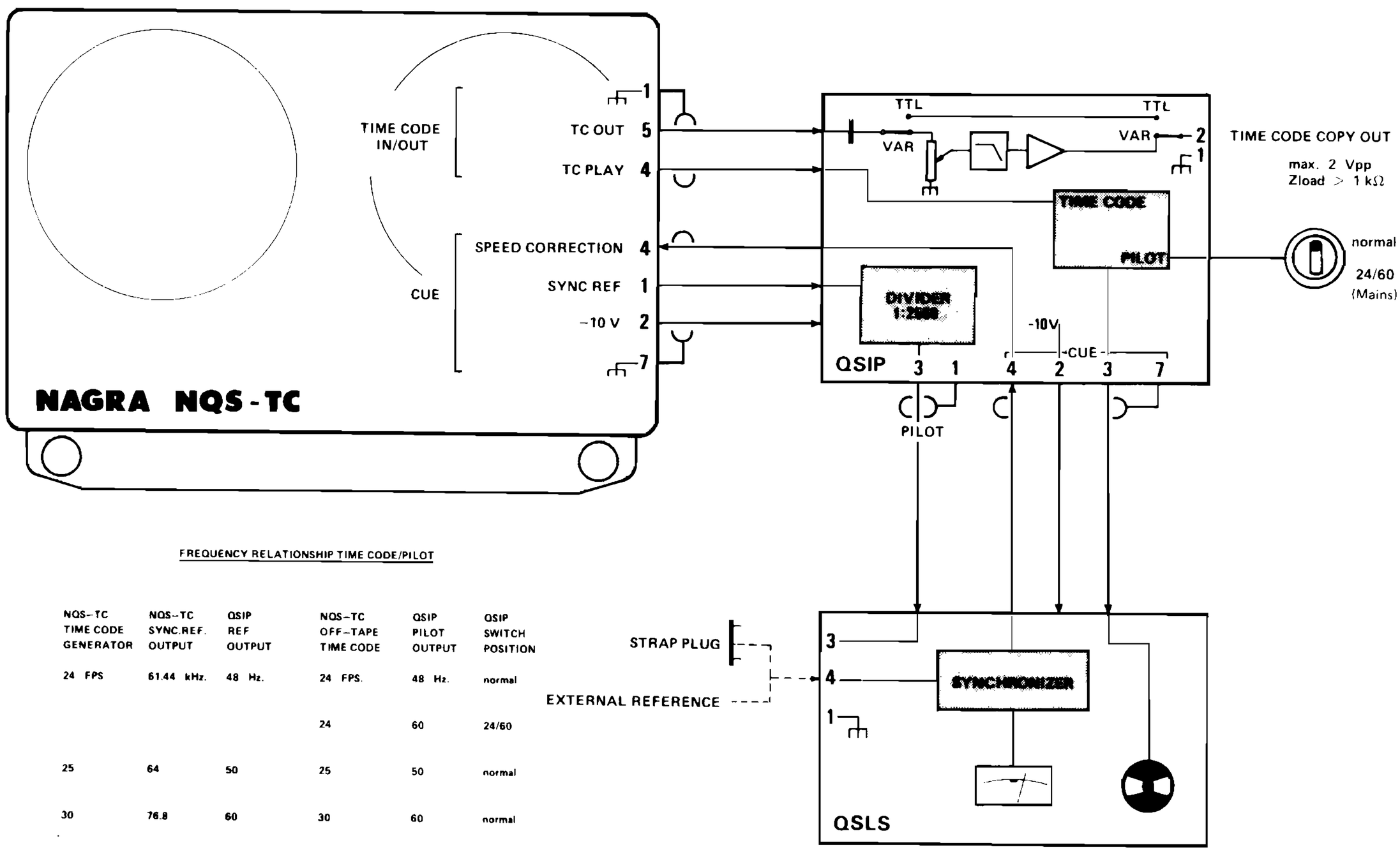

FREQUENCY RELATIONSHIP TIME CODE/PILOT

NQS–TC TIME CODE GENERATOR	NQS–TC SYNC.REF. OUTPUT	QSIP REF OUTPUT	NQS–TC OFF–TAPE TIME CODE	QSIP PILOT OUTPUT	QSIP SWITCH POSITION
24 FPS	61.44 kHz.	48 Hz.	24 FPS.	48 Hz.	normal
			24	60	24/60
25	64	50	25	50	normal
30	76.8	60	30	60	normal
29.97002617	76 723267	59.94005234	29.97002617	59 94 005234	normal

QSIA

AATON INTERFACE
06570

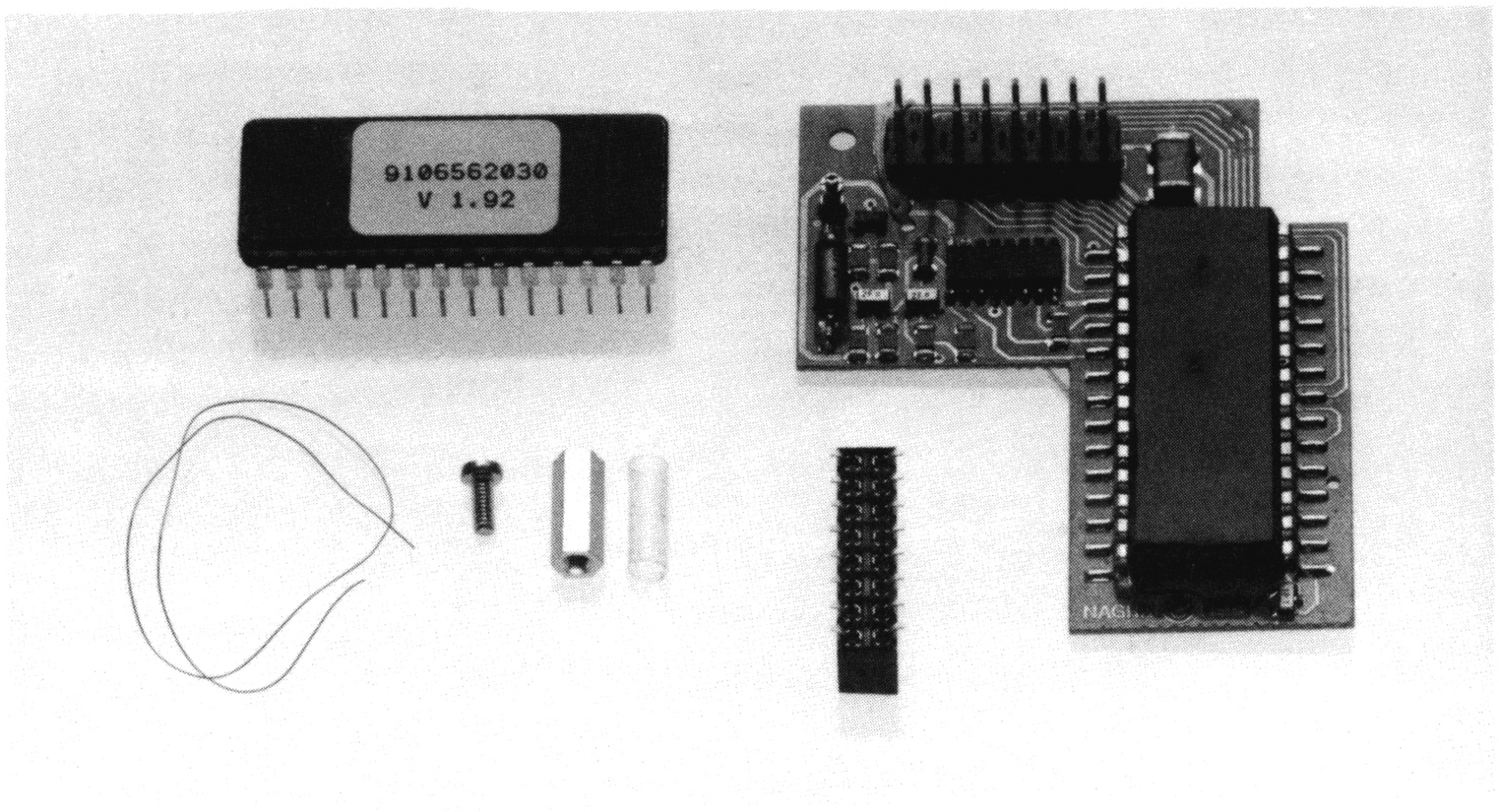

The QSIA is an RS 232 ASCII interface for the IV–S TC. It consists of a small "piggy–back" circuit to be installed internally on the time code circuit. Fitting instructions are included with the option. The machine must be fitted with the software version of at least 1.7 in order for the option to function. (This can be seen by looking at the last line of the STATUS menu on the keyboard).

The QSIA allows communication between AATON time code cameras and the ORIGIN C AATON master time code clock. With this option the internal clock of the IV–S TC can be set from the ORIGIN C and vice versa. The internal generator of the NAGRA must however be in the DATE UB (numerical command 106) mode as the ORIGIN C does not accept FREE UB.

QSCM-2

COMMENTARY MICROPHONE WITH ALC
16025

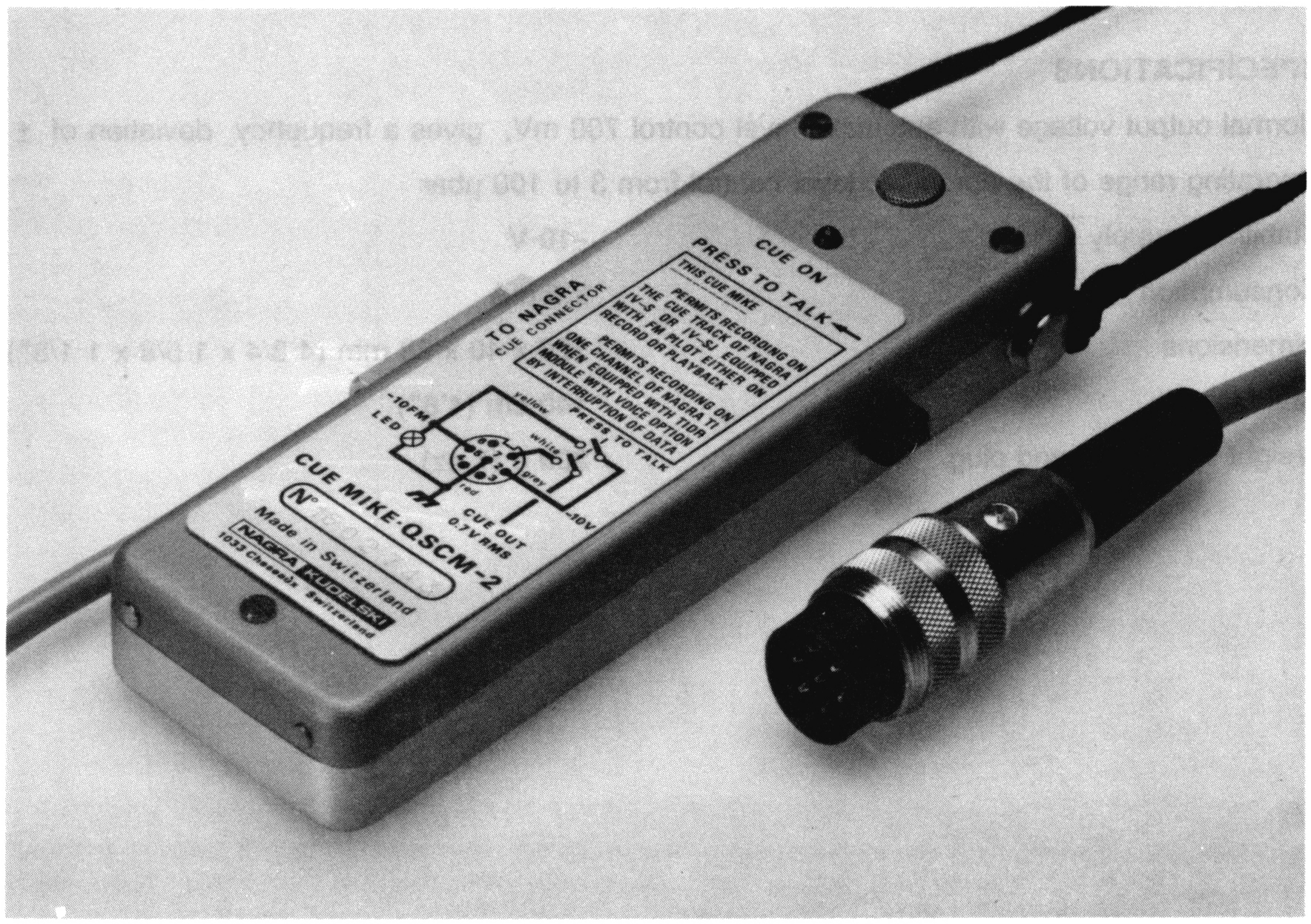

Hand microphone for recording a commentary on the pilot track of the NAGRA IV–S and IV–SJ tape recorders.

Features

Capacitor microphone system: intelligibility of the message is heightened. Sintered bronze acoustic screen effectively protecting the diaphragm. Built–in preamplifier.
Automatic level control: optimum modulation without manual adjustment.
Filters determining a bandwidth adapted to speech reproduction.
Operation by push–button.

The NAGRA IV–S and IV–SJ tape recorders may be fitted with a third track for the recording and playback of a pilot signal which will permit subsequent synchronization. In addition to the pilot signal, or in its place, the third track can receiv a commentary for identifying the sequences recorded, or giving instructions for editing.
The QSCM microphone is connected to the cue socket of the tape recorder. A commentary can be recorded at two different stages:

- during the recording of the modulation tracks, with or without simultaneous pilot signal, all previous information being erased on the three tracks;
- during the playback of the modulation tracks, with partial erasure of the signals previously recorded on the pilot track.

The microphone system is mounted on the housing which contains the preamplifier and the automatic level control; the latter ensures a practically constant output voltage when the input level varies from –20 to + 10 dB with respect to the nominal sensitivity. A high–pass filter cuts the frequencies below 250 Hz to avoid any influence on the pilot signal in case of simultaneous recording. In spite of the relatively low carrier used for the FM recording, the upper limit of the bandwidth allows excellent speech reproduction. The push–button connects the output of the preamplifier and swtches on the FM modulator of the third track.

SPECIFICATIONS

Normal output voltage with automatic level control 700 mV, gives a frequency deviation of ±20%

Operating range of the automatic level control from 3 to 100 µbar

Stabilized supply voltage	–10 V
Consumption	2.5 mA
Dimensions	120 x 40 x 28 mm (4 3/4 x 1 5/8 x 1 1/8")
cable length	140 cm (4'8")
Weight with cable and plug	200 g (7 oz)

QSEF

EXTERNAL PREAMPLIFIER WITH BALANCED INPUT
16425

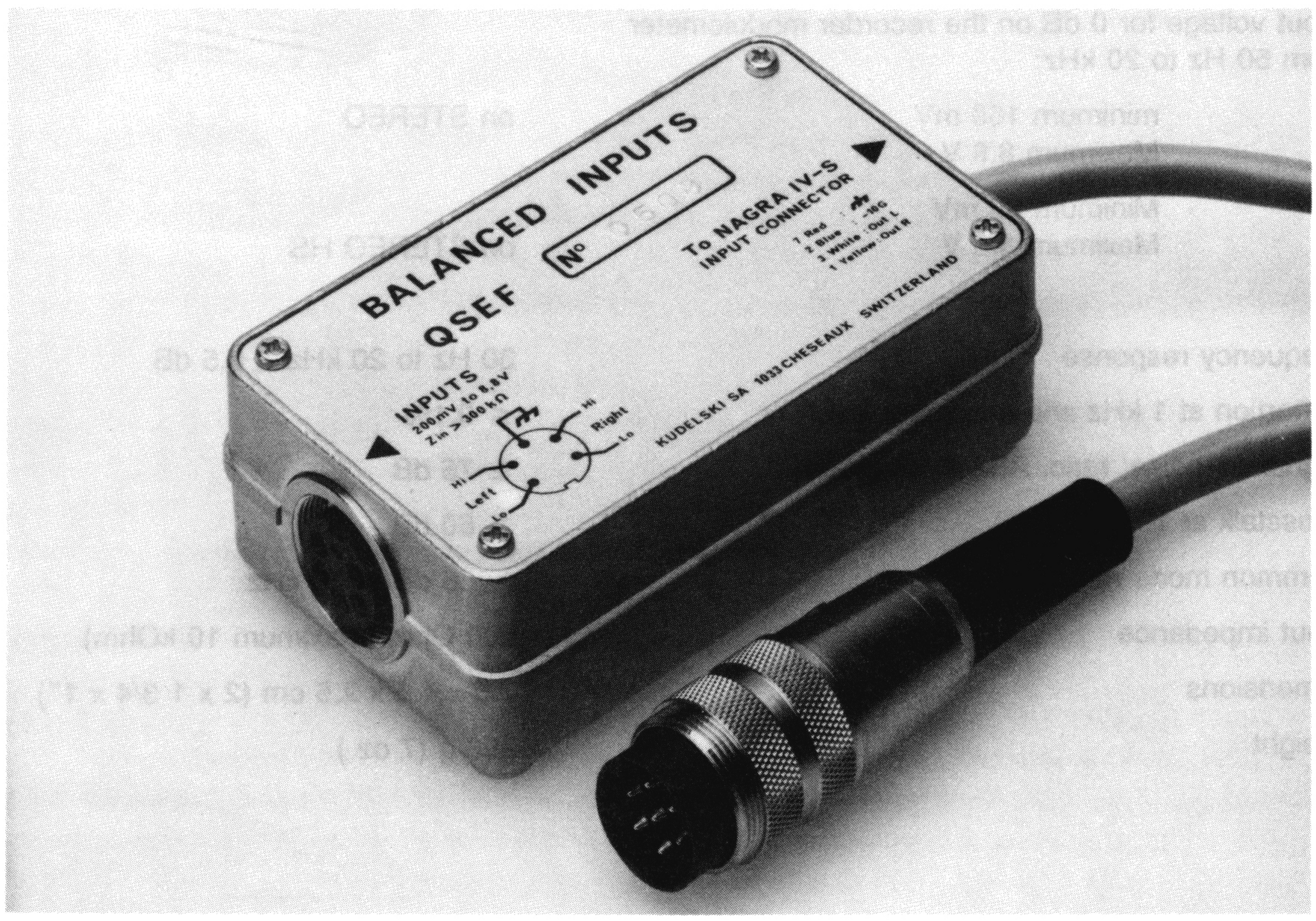

Description

When fitted to the 7–pole Tuchel input connector of the NAGRA IV–S, this accessory makes it possible to obtain two balanced line inputs insulated from the ground. The QSEF prevents parasitic voltages due to the leakage current flowing between the grounds of the various accessories connected to the NAGRA from being added to the signal.

The QSEF provides two high impedance transformer inputs which are ideal for use with professional signal sources with an internal impedance of not more than 600 Ohm and which produce voltages of less than 8.8 V RMS. With a high impedance source, but not exceeding 10 kOhm, the maximum admissible voltage is 2 V RMS. The QSEF if fed by the NAGRA.

Use

Each input has two active leads and one ground available on a 5–pin Tuchel connector. When the signal source has a symmetrical output, the two output leads should be connected to the two active leads of the QSEF; the third lead being the common ground .

When the signal source is asymmetrical, the output lead is connected to one of the active leads and the output ground to the other; the general ground is connected to the third lead. In practice, these two grounds are often identical.

The signals at the recorder input are in phase with the signals applied to the "Hi" input leads. The phase can therefore be inverted by crossing the "Hi" and "Lo" leads.

SPECIFICATIONS

Measurements taken a 600 Ohm source impedance.

Power supply	–10 V from the recorder
Power consumption	6 mA
Input voltage for 0 dB on the recorder modulometer from 50 Hz to 20 kHz:	
minimum 160 mV Maximum 8.8 V	on STEREO
Minimum 80 mV Maximum 8.8 V	on STEREO HS
Frequency response	30 Hz to 20 kHz ±0.5 dB
Distortion at 1 kHz and maximum level	≤ 0.1%
Signal–to–noise ratio, ASA A weighted	≥ 75 dB
Crosstalk at 10 kHz	> 60 dB
Common mode rejection	> 55 dB at 10 kHz
Input impedance	600 Ohm (maximum 10 kOhm)
Dimensions	7.5 x 4.5 x 2.5 cm (2 x 1 3/4 x 1")
Weight	200 g (7 oz)

QSGX-3

SWITCHABLE CRYSTAL PILOT GENERATOR 50 - 60 HZ
06697

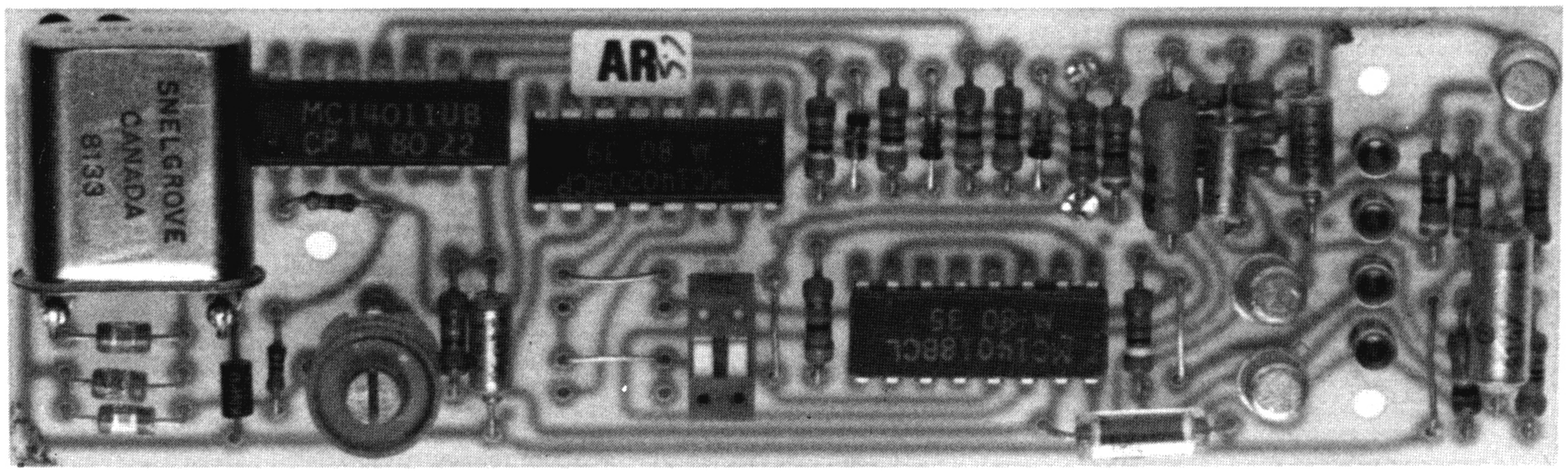

The crystal pilot generator fitted in the NAGRA provides a 50 or 60 Hz sinusoidal syncronization signal. This signal, recorded on the pilot track, allows filming with synchronous sound without cable between the recorder and the camera, the motor of which must be crystal controlled.

SPECIFICATIONS (Typical values)

Pilot signal frequency (switchable)	50 or 60 Hz
Output voltage	1 V RMS ± 10 Ohm
Output impedance approximately	150 Ohm
Total harmonic distortion	≤ 2 %
Power supply	–10 V
Power consumption approximately	4 mA
	(≤ 8 mA)
Crystal fundamental frequency	307.200 Hz
Frequency precision	$\pm 1.10^{-6}$

Thermal drift:
Between + 10 and + 30°C:
Thermal coefficient ± 5 ppm corresponding to a maximum of 1 frame in more than 2 hours of filming at 24 frames/sec.

Between – 25 and + 70°C:
Thermal coeficient ± 80 ppm corresponding to a maximum of 1 frame in 10 minutes at 24 frames/sec.

Dimensions	134 x 50 x 15 mm (4 1/2 x 2 5/8")
Weight	0.025 kg (4 1/2 oz)

QSHZ

UNBALANCED HIGH IMPEDANCE EXTERNAL AMPLIFIER
16400

Description

When connected to the 7-pole input connector of the NAGRA IV-S, this accessory makes it possible to transform the current inputs of the recorder into very high impedance voltage inputs.

Use

The use of the QSHZ is recommended when the signal source cannot be loaded with a low impedance, as with most high-fidelity installations, or when a low amplitude signal is supplied.
The QSHZ is powered by the NAGRA.

Warning: The source load impedance decreases when the recorder is on STOP.

If the input signal has a high impedance, the cable connecting it to the QSHZ should be short to avoid attenuation of the high frequencies; this may involve extending the cable between the QSHZ and the recorder. The QSHZ high impedance input is a one 6-pole Tuchel connector.

SPECIFICATIONS (Typical values)

Supply voltage	–10 V from the recorder
Power comsumption	3.3 mA
Input voltage for 0 dB level on the recorder	on STEREO : 20 mV to 2 V on STEREO HS : 10 mV to 2 V
Input impedance	80 MOhm/25 pF
Frequency response	from 30 Hz to 20 kHz ± 1 dB
Maximum input voltage	2.4 V (use input dividers if higher)
Signal–to–noise ratio, ASA A weighted	> 70 dB
Crosstalk	> 60 dB at 10 kHz
Source impedance	≤ 100 kOhm
Dimensions	77 x 47 x 25 mm (3 x 1 7/8 x 1")
Weight	230 g (8 oz)

QSLS

PILOT SYNCHRONIZER FOR NAGRA IV–S
16350

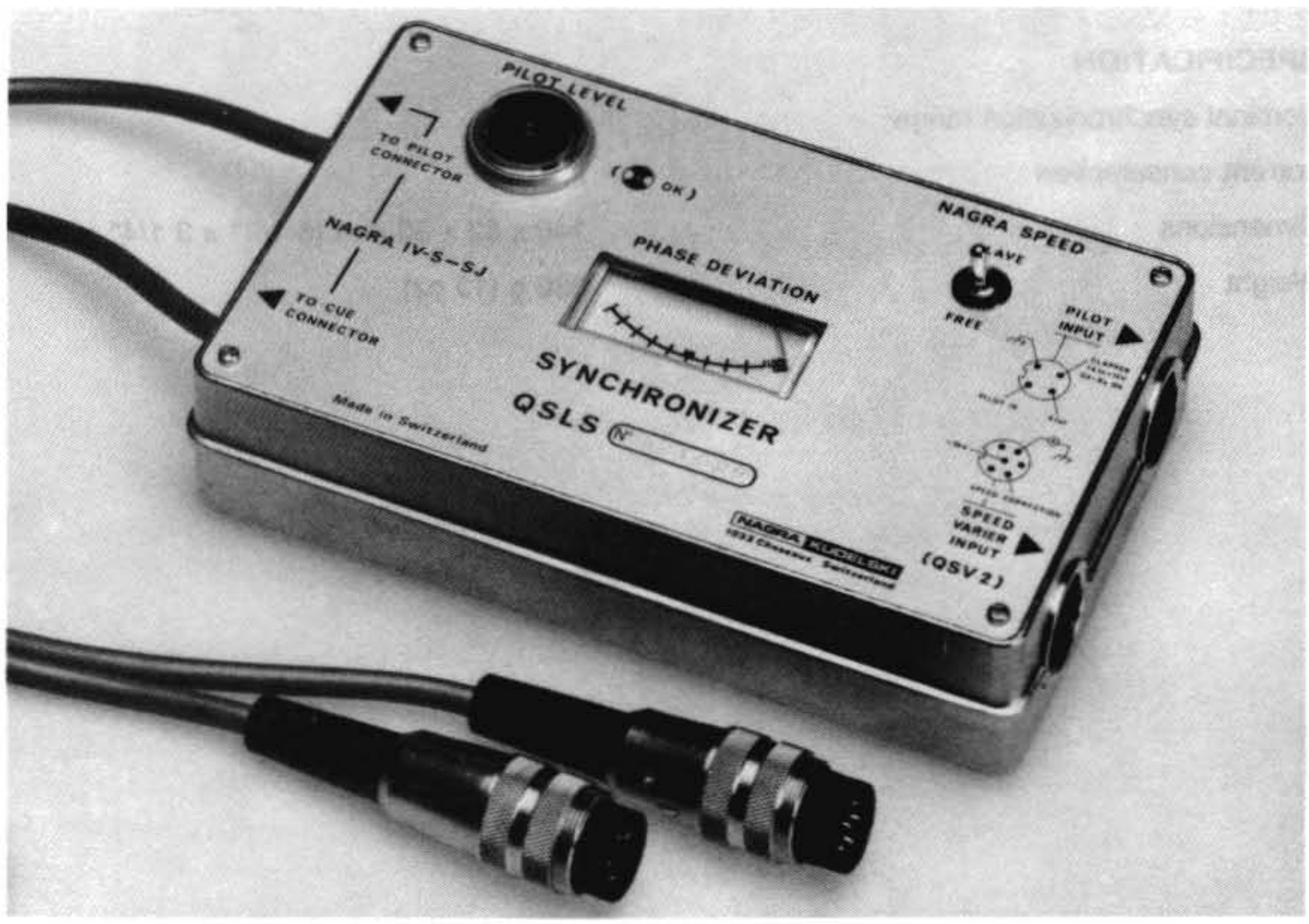

External synchronizer. It varies the tape speed of the NAGRA to resolve the playback pilot signal to a pilot reference signal.
The QSLS can be connected to the PILOT & CUE inputs on the right–hand side of the NAGRA IV–S or IV–SJ.

The synchronization signal must be applied to the PILOT INPUT connector which also carries the reference signal from the internal crystal pilot generator of the NAGRA; this signal can be used for synchronization. This offers the possibility of playing back the signal at the speed at which it was recorded, with about 0.001% accuracy.

The QSV2 speed varier can be connected to the SPEED VARIER INPUT when it is necessary to extend the synchronization range (± 12%).
The meter gives two readings:

- if the NAGRA SPEED switch is in FREE, i.e. not slaving, it indicates the frequency error between the playback pilot frequency and that of the synchronization signal. One complete oscillation of the needle left / right / left, in two seconds, indicates a speed difference of 1%.
- if the same switch is set on SLAVE, the synchronizer adjusts the tape speed, slaving the playback pilot signal to the reference signal. The meter needle then shows the phase difference between the two signals and should not oscillate.

If the desired speed correction is beyond the slaving capability of the device (± 3%), the meter needle begins to oscillate; use of the QSV–2 speed varier will extend the slaving range by ± 12%.
The PILOT LEVEL indicator becomes black if there is no pilot signal or if it is not sufficient for good synchronization.

Applications

- Filming on playback
- Transfer of sound recorded on a NAGRA to a film or perforated (Mag Stripe) tape
- Correlation of signals recorded on several recorders
- Synchronous measuments etc.

SPECIFICATION

Nominal synchronization range	± 3%
corrent consumption	8.8 mA
Dimensions	140 x 82 x 30 mm (5 1/2" x 3 1/4" x 1 1/4")
Weight	360 g (13 oz)

QSNES

ACCESSORY WITH BALANCED INPUTS AND OUTPUTS FOR INSERTION OF A NOISE REDUCTION SYSTEM
16525

With this external accessory a noise reduction system, a compressor or any other external accessory can be inserted into the recording chain of a NAGRA IV–S.

Description

The QSNES provides two balanced inputs and two balanced outputs by means of amplifiers with transformer: the inputs and outputs are available on 5–pole Tuchel connectors. This accessory connects to the EXT. NRS connector of the recorder.

Use

When the QSNES is connected and the NORMAL / NRS switch of the recorder is on NRS, the signal entering the recording chain si diverted into the QSNES through the EXT. NRS connector. After treatment by the accessory connected to the QSNES, it re–enters the recording chain of the recorder.
The nominal input voltage of each channel can be switched separately to 0.775 V, 1.55 V, 3.1 V or 4.4 V. The phase of each of the balanced outputs can be inverted.

SPECIFICATIONS (Typical values)

Frequency response	from 50 Hz to 20 kHz ±0.5 dB
Distortion at nominal level	<0.2%
Signal–to–noise ratio, ASA A weighted	>90 dB
Crosstalk at 10 kHz	>70 dB

Balanced inputs:

Input level to obtain the nominal input level (0 dB = 560 mV) on the recorder	0.775 V, 1.55 V, 3.1 V, 4.4 V
Maximum input level on 4.4 V	+ 7 dB
in the other position	+ 10 dB
Input impedance	> 600 kOhm

Balanced outputs:

Nominal output level for 0 dB = 560 mV on the recorder	1.55 V without load
Minimum load impedance	400 Ohm
Maximum output level	+ 8 dB = 3.9 V
Dimensions	15 x 8.5 x 3.5 cm (5 x 3 3/8 x 1 3/8")
Weight	530 g (15 oz)

QSQC

EXTERNAL PARALLEL CONNECTING UNIT FOR NAGRA IV–S 16500

Description

This external accessory can be used for connecting the direct chains of two, three or four NAGRA IV–S recorders in parallel. The QSQC has two cables with Tuchel connectors which can be fitted to the EXT. NRS connectors of the two recorders to be operated in parallel. If more than two recorders are being used, a QSQC extension cable can be fitted to connectors 3 or 4 of the QSQC and the EXT. NRS connector of a third and / or fourth recorder.

The QSQC contains two amplifiers which mix the signals from all left channels and, separately, the signals from all right channels. The sum of the left channel signals is then sent back to the left recording channel and the sum of the right channel signals to the right recording channel of each recorder.

Applications

The QSQC can be used for:

- mixing several NAGRA recorders
- making several master tapes simultaneously
- tape duplication
- re–recordion
- editing for special effects
- lengthy recordings using two NAGRA recorders alternately.

Use

Set the EXT. NRS switch of each recorder to NRS; the signals at the inputs, regulated by the potentiometers of the recorders, are passed to the QSQC where they are mixed and sent to each recorder. The mixed signals can be taped on one single machine, while the other recorders are used as a mixer: in this case the main function selector of each machine should be on TEST. When the end of one tape is reached, recording can be continued on a second machine, making it possible to record a long sequence without interruption. It is also possible to record four master tapes simultaneously.

If a tape is played back with the LINE & PHONES switch on DIRECT, this signal can be mixed with the signals entering one or more other recorders and the whole recorded on a third or fourth recorder. This technique can be used for recording a soloist on top of one or several pre–recorded accompaniments. The EXT. NRS switch of the NAGRA playing back can be left on NORMAL so that only the accompaniment is heard in the headphones.

It is not necessary for the EXT. NRS switch of the machines not recording the mixed signal to be on NRS. On NORMAL the level of the various signals entering the recorders is indicated by their modulometer, while on NRS the modulometer indicates the level of the sum of the signals.

SPECIFICATIONS (Typical values)

Supply voltage from the recorder	–10 V	
Power consumption	11 mA	
Frequency response	± 0.5 dB from 30 Hz to 20 kHz	
Distortion	≤ 0.1%	
Signal–to–noise ratio, ASA A weighted	> 90 dB	
Nominal output level	560 mV = 0 dB	
Maximum level	+ 10 dB	
Crosstalk	> 60 dB	
Input level of nominal output level	with one input	560 mV
	with two inputs	–6 dB = 280 mV
	with three inputs	approx. –9.5 dB = 190 mV
	with four inputs	approx. –12 dB = 140 mV
Dimensions	11 x 6 x 3 cm (4 1/4 x 2 1/4 x 1 1/8")	
Weight	300 g (10 1/2 oz)	
Additional equipment	QCQC cable, length 1.2 m (4 ft)	

QSSC

EXTERNAL SLIDE PROJECTOR SYNCHRONIZER FOR USE WITH NAGRA IV–S AND IV–SJ RECORDERS
16475

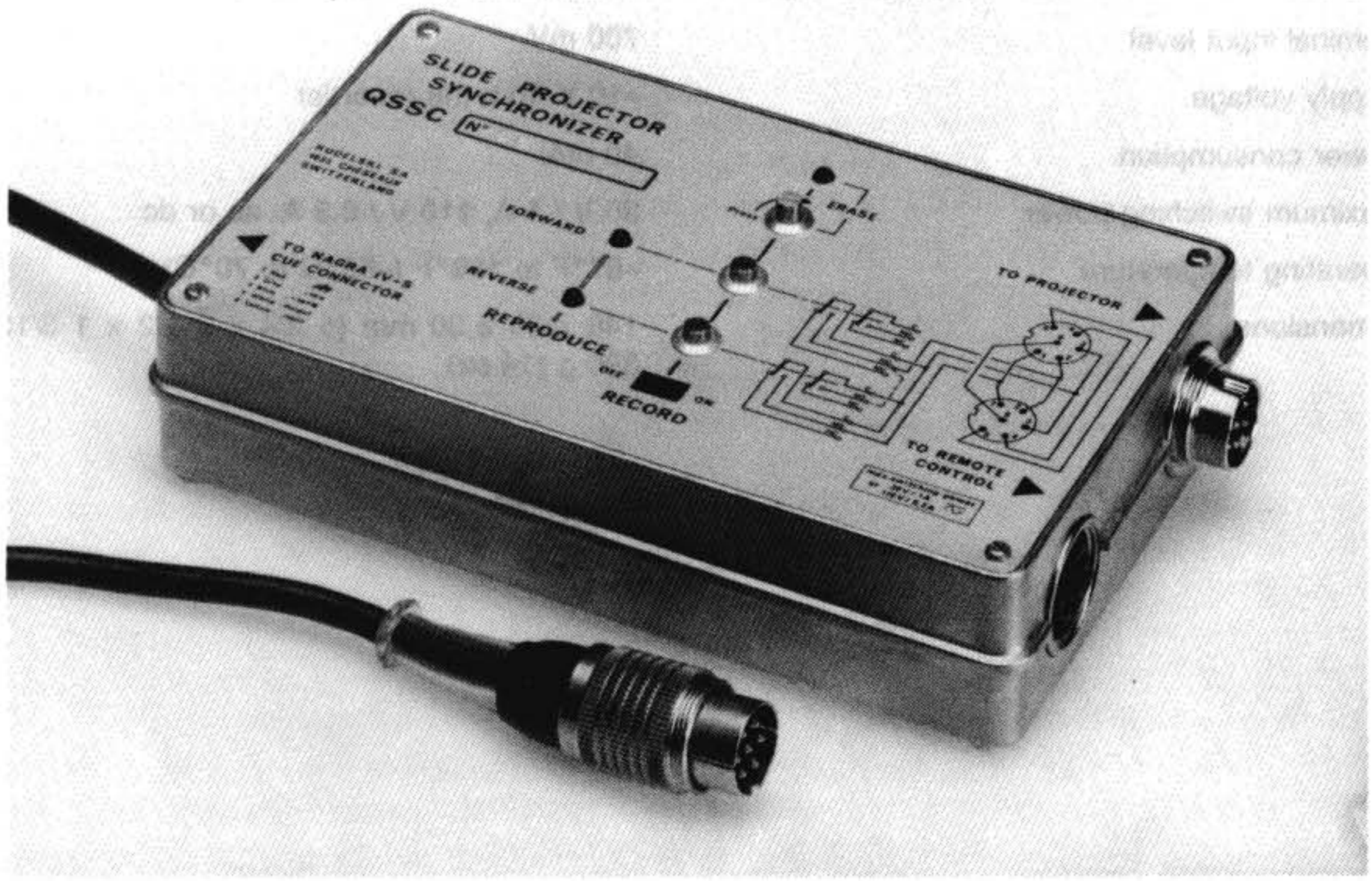

Description

This accessory can be used to record synchronization pulses on the third track of NAGRA IV–S and IV–SJ recorders: these signals can then be used to drive a slide projector or any other accessory. The QSSC is connected to the recorder by a cable with a 7–pole Tuchel plug and to a slide projector or other accessory through its 6–pole Tuchel male output connector. If the projector used has a remote control device, it is also possible to connect it to the QSSC using its 6–pole Tuchel female output connector.

Use

Synchronization pulses can be recorded at the same time as the sound, or later. To record pulses, connect the QSSC to the NAGRA and set the RECORD switch of the QSSC to ON. At desired intervals, press the FORWARD or REVERSE buttons to record the appropriate pulse signals. Pulses recorded with the FORWARD button will cause the slides to move forward, and the REVERSE button will make them move backwards. The indicator on the left of each button lights up to show the signal has been recorded. To erase pulses, press the ERASE button and turn it slightly to lock it in position. The erase function has its own indicator. When the required signals have been recorded the RECORD switch should be set to the "OFF" position to avoid any accidental pulses.

The wiring of the PROJECTOR and REMOTE CONTROL connectors is shown on the control panel to allow other switching possibilities when the QSSC is to be used with an accessory other than a slide projector, or when the slide projector remote control connector is not of standard type.

SPECIFICATIONS (Typical values)

Output signal frequency	forward 2 kHz reverse 500 Hz
Nominal output level	1 V RMS
Input signal frequency to obtain correct operation	forward from 1.350 Hz reverse between 320 and 800 Hz
Nominal input level	700 mV
Supply voltage	–10 V from the recorder
Power consumption	40 mA
Maximum switching power	30 V / 1 A, 110 V / 0.3 A, ac or dc
Operating temperature	–67°F to 158°F (–55°C to 70°C)
Dimensions	146 x 88 x 30 mm (5 3/4 x 3 1/2 x 1 3/16") 390 g (14 oz)

QSSF

EXTERNAL BALANCED OUTPUT AMPLIFIER FOR NAGRA IV–S AND IV–SJ 16450

This accessory can be connected to the unbalanced outputs of a NAGRA IV–S or IV–SJ recorder in order to obtain balanced floating outputs (1.55 V / 600 Ohm). These outputs are available for the right and left channels on two Cannon XLR 3–pole connectors and also on banana connector sockets. A stereo jack is provided for connecting stereo headphones. The signals at the outputs marked 3 are in phase with the output signals of the recorder. The 7–pole Tuchel connector of the QSSF cable connects to the output connector of the NAGRA.

Use

If the output of the NAGRA is to be connected to a line which requires a voltage higher than the nominal voltage of the recorder, the QSSF output amplifier can be used. It prevents earth loops between the recorder and the equipment connected to its outputs. The QSSF supplies 1.55 V on a 600 Ohm load. The maximum output level of the NAGRA can exceed the nominal level by more than 4 dB, but as the saturation level of the QSSF is higher than +8dB , it can easily withstand the level increase.

SPECIFICATIONS (Typical values)

Power supply	−10 V from the recorder
Power consumption	14 mA, no load
Output voltage,	NAGRA IV–S0 dB = 1.55 V
	NAGRA IV–SJ +20 dB = 1.55 V
Minimum load impedance	400 Ohm
Headphones output voltage at nominal level	no load, 180 mV 10 Ohm load, 80 mV
Frequency response	30 Hz to 35 kHz ± 0.5 dB
Distortion at 1 kHz for 1.55 V output level	< 0.1%
Saturation level with reference to nominal level	> +8 dB
Signal–to–noise ratio ASA A weighted	> 100 dB
Crosstalk	> 60 dB
Dimensions	14.5 x 9 x 3 (5 3/4 x 3 1/2 x 1 1/4")
Weight	500 g (1 lb 1 1/2 oz)

QSV-2

SPEED VARIER FOR NAGRA IV–S, IV–SJ AND 4.2
14600

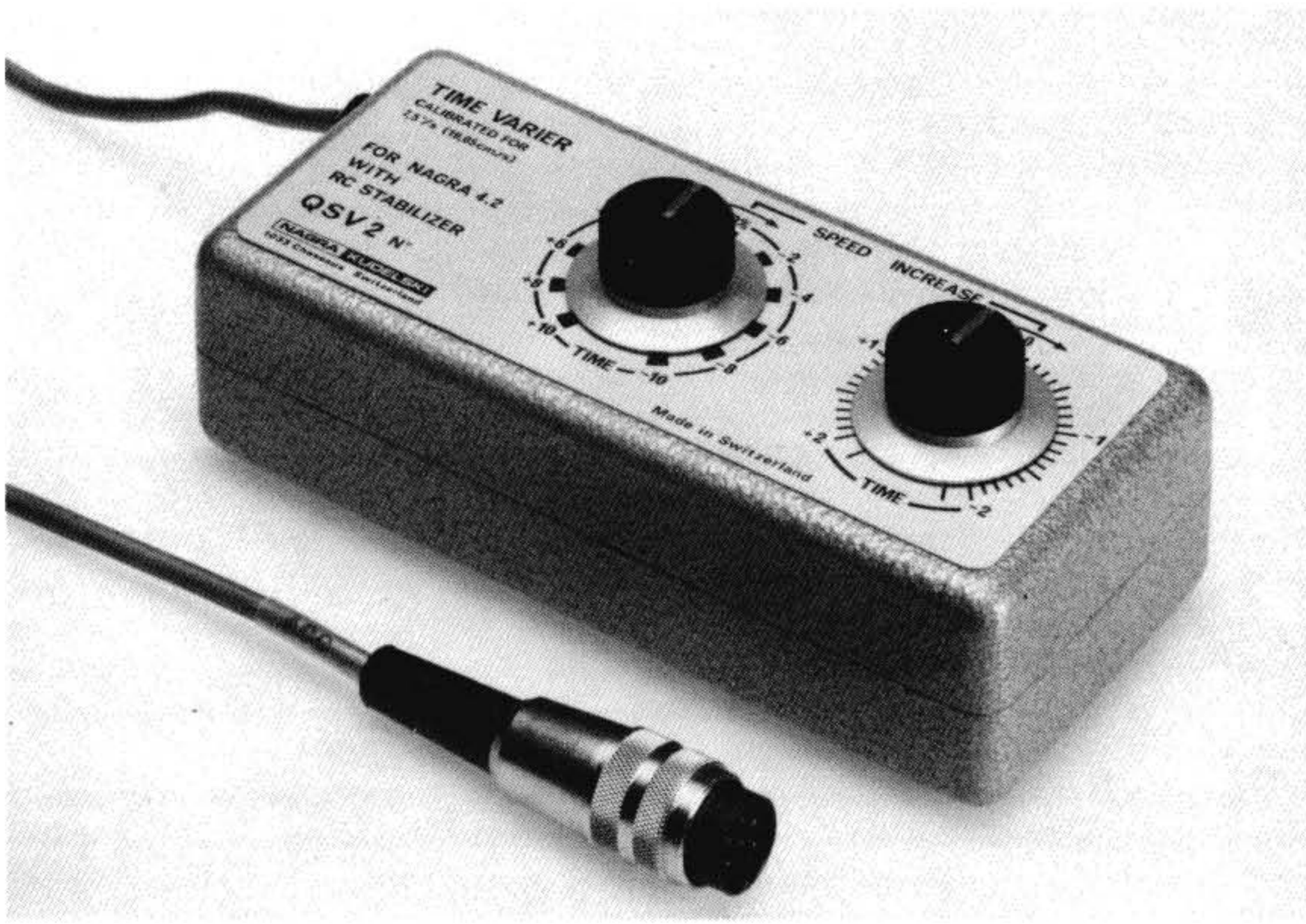

When connected to the NAGRA, the Speed Varier allows all 3 speeds 15"/s – 7.5"/s – 3.75"/s (38 cm/s – 19 cm/s – 9.5 cm/s) to be varied manually up to ± 12%.

Sound transfer applications:

- To adjust the pilot signal frequency to a reference.
- To compensate for a missing pilot signal or to adjust the synchronization when the pilot signal frequency fluctuates.

Dimensions	142 x 62 x 38 mm (5 3/4" x 2 1/2" x 1 5/8")
Weight	0.450 kg (1 lb)

QTIM

TAPE DRIVEN TIMER
14650

This timer is graduated in minutes and is installed in place of the right tension roller. The gear ratio is so calculated that one revolution corresponds to 30 minutes at 7½ ips (19 cm/s).
The counter installation requires a new tape transport adjustment.

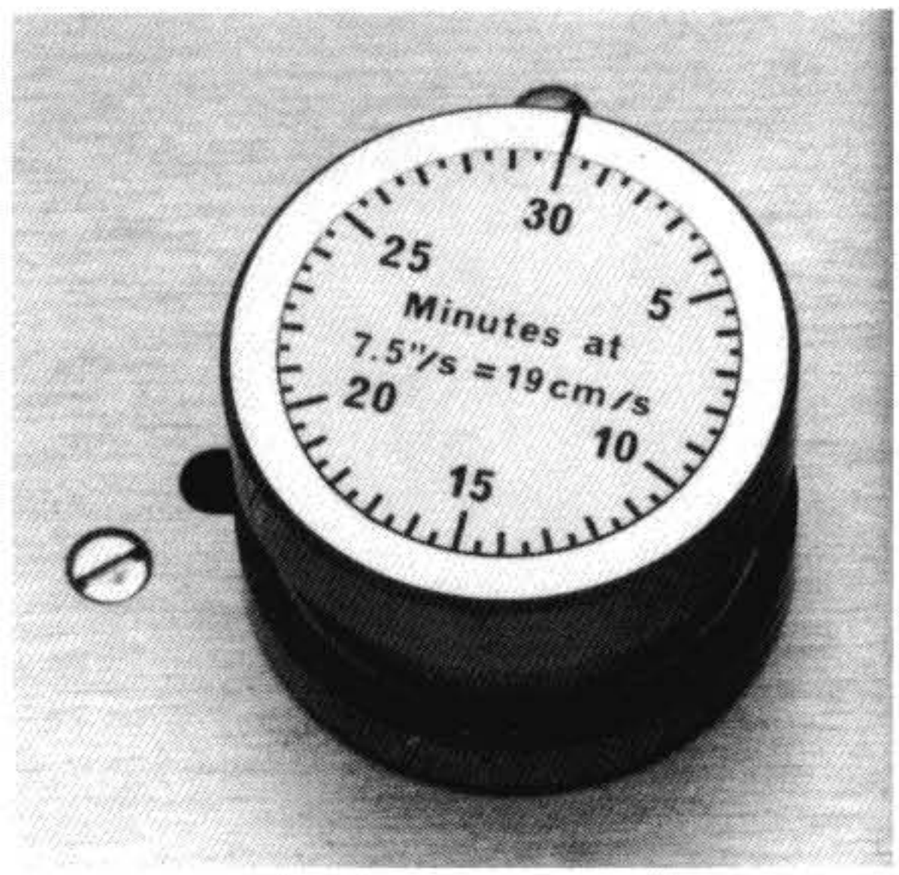

QLEN

TAPE DRIVEN COUNTER
14655

As above but graduated in feet.

QRAC

TAPE CLEANING BLADE
06260

The tape cleaning blade suppresses surface irregularities present on new tapes, to improve performance in the high frequency range. This accessory is a must for very high quality recordings.

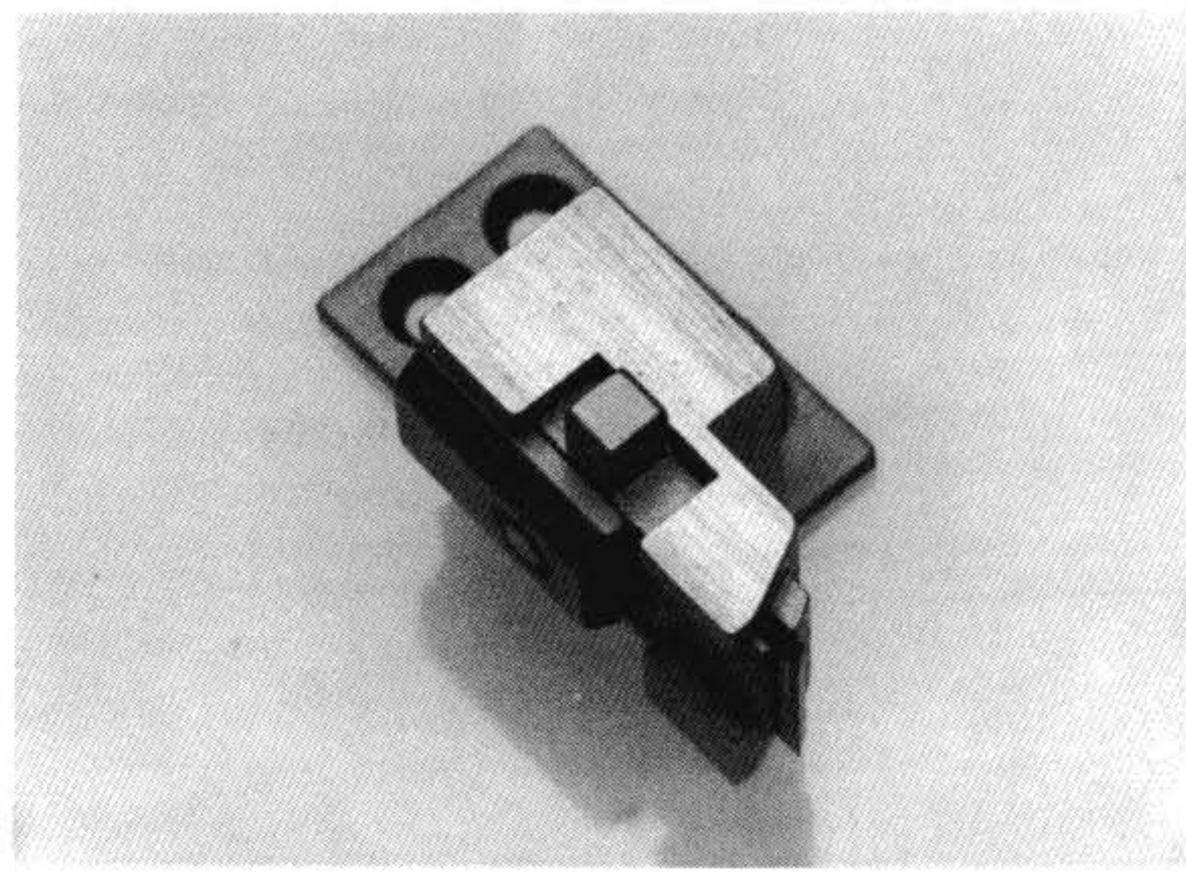

PA–4

SET OF TWELVE 4 AH NI–CD RECHARGEABLE CELLS
98254

When the QGB large reel adapter is powered by the Nagra, the increased consumption can be compensated by using 4 Ah rechargeable batteries. They will ensure the same uninterrupted recording time as 2.5 Ah batteries powering a NAGRA without QGB (8 hours).

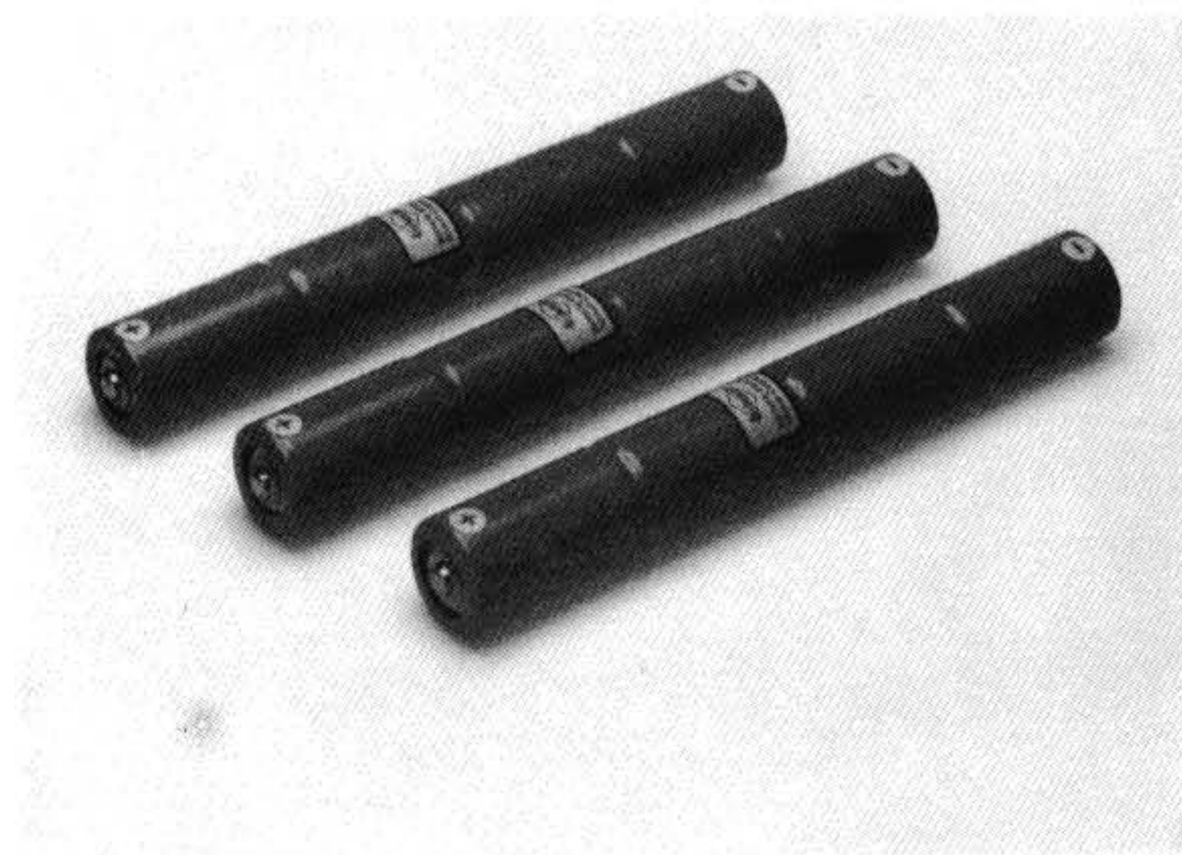

TECHNICAL INFORMATION 6

TIE	DESCRIPTION	DATE
06 - 1	Improvement of tachometric residual noise	March 1978
06 - 2	New tape adjustments of the Nagra IV -S with CCIR equalization	June 1980
06 - 3	Mike / line switch modification	September 1981
06 - 4	Signal distortion at low frequencies	October 1983
06 - 5	Modification of the Time Code version into FM Pilot	February 1985
06 - 6	Improvement of the CPU Reset, when rapidly switching main selector	September 1985
06 - 7	Improvement of the CPU Rest, when rapidly switching the main selector through STOP	February 1986
06 - 8	Erroneous Time Code operation when working off batteries or accumulators close to end of discharge	December 1985
06 – 9	Improvement of CPU Rest, when rapidly switching the main selector through STOP	June 1986
06 - 10	Inhibition of the Time Code recording	October 1986
06 - 11	New calibration tapes	January 1988
06 - 12	Recording Amplifier (A 15) correction of gain adjustment range	March 1988

PRODUCT: NAGRA IV–S

DATE: March 1978

Nº 06-1

SUBJECT: Improvement of tachometric residual noise
Amélioration du résidu tachymétrique
Verbesserung des tachometrischen Restgeräusches

● A sensible improvement of the tachometric residual noise has been obtained by eliminating an earth loop. The gain is at less 6 dB.
This modification is made from serial Nr 2526 on.

(See Parts location diagram A22 and synoptic diagram):
The red wire (shielding) connecting point ⟨19⟩ to earth has to be suppressed.

● Une nette amélioration du résidu tachymétrique a été obtenue par l'élimination d'une boucle de masse; le gain est de 6 dB au moins.
Cette modification est apportée dès le No 2526.

(Voir implantation A22 et schéma synoptique):
Il faut supprimer le fil rouge (blindage) reliant le point ⟨19⟩ à la masse.

● Eine beachtliche Verbesserung des tachometrischen Restgeräusches wurde durch Entfernen einer Erdungs–schlaufe erreicht. Der Gewinn beträgt mindestens 6 dB.
Ab Nr 2526 sind die Tonbandgeräte entsprechend abgeändert.

(Siehe Schaltungs-Schema A22 und Uebersichts-Schema):
Der den Punkt ⟨19⟩ erdende rote Abschirmungsdraht muss entfernt werden.

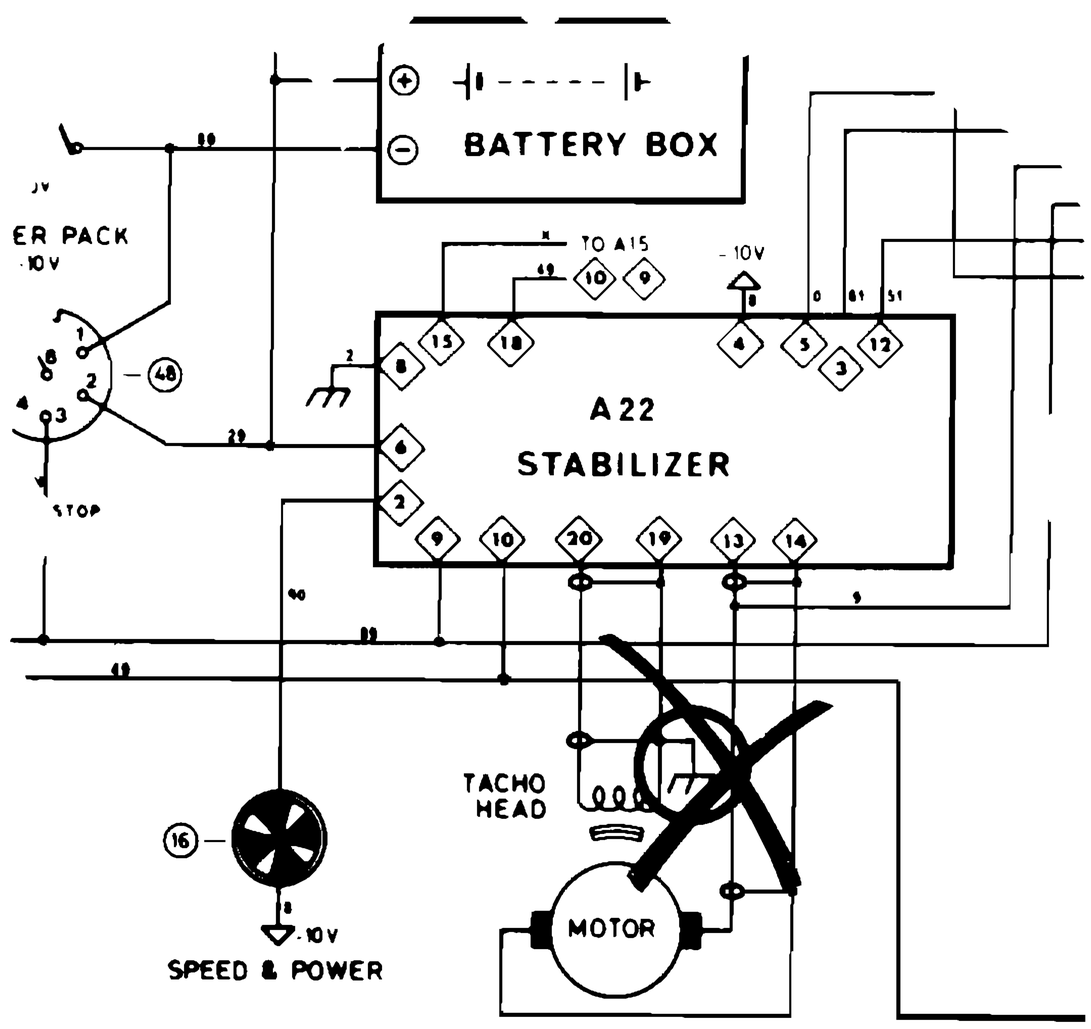

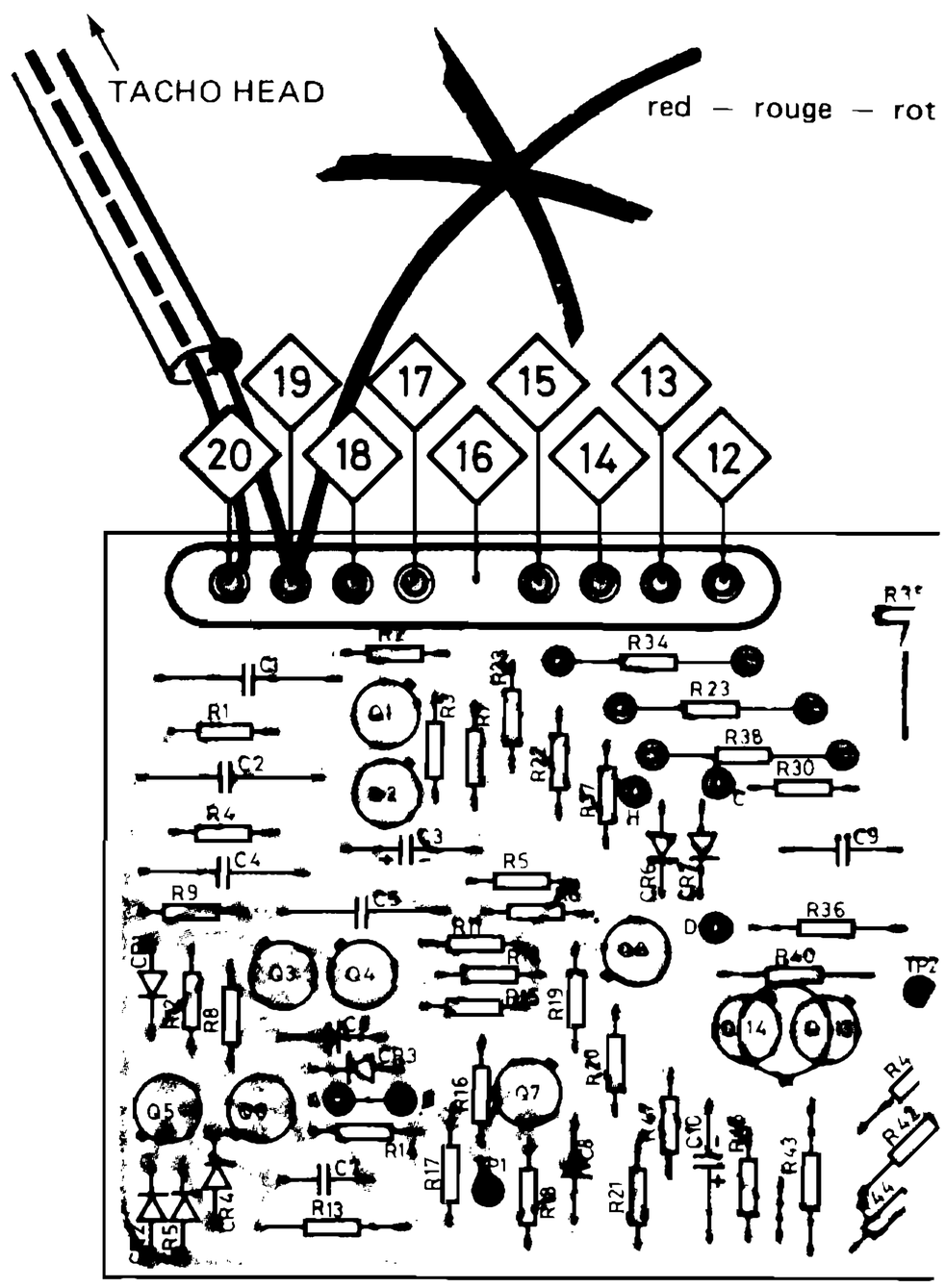

PRINTED IN SWITZERLAND BY KUDELSKI SA

NAGRA KUDELSKI
KUDELSKI SA 1033 CHESEAUX / SWITZERLAND, Phone: 021 91 21 21, Telex: 24 392

PRODUCT: NAGRA IV–S **DATE:** June 1980

Nº 06-2

SUBJECT: New tape adjustments of NAGRA IV–S with CCIR equalization
Nouveaux réglages de bande pour le NAGRA IV–S CCIR
Neue Bandeinstellung mit NAGRA IV–S Tonbandgeräten, Entzerrung nach CCIR

● The improvement of tape characteristics has enabled us to improve the record and playback specifications of the NAGRA IV–S.
Factory adjustment is carried out using a Scotch 3M 256 tape.
Enclosed is a comparative table showing the differences between performances obtained with 3M 256 and some others without readjustment. An optimal adjustment can be achieved for another tape but the performance with all other tapes will be inferior.
The de–emphasis for NAGRAMASTER 15 ips speed is 13 µs. Thus for good results when using this speed, high energy tapes with low distortion and high treble modulation capability should be used.

FACTORY ADJUSTMENT

Tape used

15 ips NAGRAMASTER
15 ips Standard
7 ½ ips Standard
} Scotch 3M 256

3 ¾ ips: BASF LPR 35 LH

Bias setting

Adjustment made at 15 ips, frequency 1 kHz, K factor = 1.05

Playback level

0 dB on meter = 510 nWb/m

Recording level

0 dB on meter =
- 510 nWb/m at 15 ips
- 405 nWb/m at 7 ½ ips
- 320 nWb/m at 3 ¾ ips

Predistortion

Adjustment at 15 ips Standard, frequency 1 kHz, minimum distortion for + 4 dB

MODIFICATION OF THE BIAS

A selector, to the left of the recording head, permits by simple rotation modification of the bias level to optimise performance when using tapes other than 3M 256 (e.g. AGFA PER 525, BASF SPR 50 LH or PYRAL CJ 47).
For 3 ¾ ips speed, the bias selector must be shifted one position anticlockwise.

● L'évolution des caractéristiques des bandes magnétiques permet d'améliorer les performances de lecture et d'enregistrement du NAGRA IV–S.
Le réglage en usine est effectué avec une bande Scotch 3M 256.
Le tableau comparatif annexé indique les différences de valeurs obtenues avec d'autres bandes tout en conservant le réglage usine. Un réglage optimum est possible pour chaque type de bande, mais ce sera au détriment de tous les autres types.
La constante de temps pour la vitesse 38 cm/s NAGRAMASTER est de 13 µs. C'est pourquoi il est nécessaire d'utiliser à cette vitesse des bandes à haut niveau, faible distorsion et forte capacité d'enregistrement des aigües.

REGLAGES EFFECTUES EN USINE

Bande utilisée

38 cm/s NAGRAMASTER
38 cm/s Standard
19 cm/s Standard
} 3M 256

9,5 cm/s Standard: BASF LPR 35 LH

PRINTED IN SWITZERLAND BY KUDELSKI SA

NAGRA KUDELSKI
KUDELSKI SA 1033 CHESEAUX / SWITZERLAND, Phone: 021 91 21 21, Telex: 24 392

Prémagnétisation

Réglage à 38 cm/s, fréquence 1 kHz, K = 1,05

Niveau de lecture

Niveau nominal 0 dB au modulomètre = 510 nWb/m

Niveau d'enregistrement

Niveau nominal 0 dB au modulomètre = { 510 nWb/m à 38 cm/s; 405 nWb/m à 19 cm/s; 320 nWb/m à 9,5 cm/s }

Prédistorsion

Réglage à 38 cm/s Standard, fréquence 1 kHz, distortion minimum à + 4 dB

MODIFICATION DE LA PREMAGNETISATION

Le commutateur situé à gauche de la tête d'enregistrement permet par simple rotation de modifier la valeur de la prémagnétisation et d'améliorer ainsi les caractéristiques lors de l'utilisation de bandes différentes de la 3M 256, comme par exemple AGFA PER 525, BASF SPR 50 LH ou PYRAL CJ 47.
A la vitesse 9,5 cm/s, le commutateur doit être décalé d'un cran à gauche.

● Die stete Verbesserung der Bandeigenschaften bringt eine bemerkliche Verbesserung der Aufnahme– und Wiedergabecharakteristiken des NAGRA IV–S mit sich.
Neuerdings wird die Werkeinstellung mit einem Scotch 3M 256 durchgeführt; die so erhaltene Einstellung gibt auch mit anderen zu Verfügung stehenden Bändern gute Ergebnisse, wie aus der beiliegenden Uebersichtstabelle zu entnehmen ist. In dieser Tabelle sind die Abweichungen bei Verwendung anderer Bändern, jedoch mit ungeänderter Werkeinstellung, aufgezeichnet.
Es ist zwar durchaus möglich, das NAGRA IV–S auf ein bestimmtes Band optimal einzustellen, doch kann sich diese Einstellung für andere Bänder als schlecht erweisen.
Die Zeitkonstante für 38 cm/s NAGRAMASTER beträgt 13 µs. Deswegen ist es notwendig, bei dieser Geschwindigkeit Bänder mit hohem Pegel, geringem Klirrfaktor und grosser Höhenaussteuerbarkeit zu verwenden.

WERKEINSTELLUNG

Verwendete Bänder

38 cm/s NAGRAMASTER
38 cm/s Standard
19 cm/s Standard } 3M 256 — 9,5 cm/s Standard: BASF LPR 35 LH

Vormagnetisierung

Einstellung bei 38 cm/s, Frequenz 1 kHz, K = 1,05

Wiedergabepegel

Nominalpegel 0 dB am Modulometer = 510 nWb/m

Aufnahmepegel

Nominalpegel 0 dB am Modulometer = { 510 nWb/m bei 38 cm/s; 405 nWb/m bei 19 cm/s; 320 nWb/m bei 9,5 cm/s }

Klirrkompensation

Einstellung bei 38 cm/s, Frequenz 1 kHz, minimal Verzerrung bei + 4 dB

ANPASSEN DER VORMAGNETISIERUNGSSPANNUNG

Bei Verwendung anderer Bänder als 3M 256, wie zum Beispiel AGFA PER 525, BASF SPR 50 LH oder PYRAL CJ 47, darf die Vormagnetisierungsspannung angepasst werden um die Ergebnisse zu verbessern.
Dies geschieht durch drehen des sich links des Aufnahmekopfes befindenden Einstellknopfes.
Bei Verwendung des BASF LPR 35 LH Bandes (Einstellungsband) bei 9,5 cm/s, muss dieser Knopf um eine Position nach links zurückgedreht werden.

NAGRA IV-S CCIR

PERFORMANCE OBTAINED WITH VARIOUS TAPES WITHOUT ALTERATION OF THE RECORDERS ADJUSTMENTS WITH REFERENCE TO THE TAPE USED FOR CALIBRATION

PERFORMANCES OBTENUES AVEC DIFFERENTES BANDES SANS RETOUCHE DES REGLAGES DE L'APPAREIL, COMPAREES AUX BANDES UTILISEES POUR LE CALIBRAGE

ERGEBNISSE MIT VERSCHIEDENEN TONBÄNDERN, OHNE NACHSTELLEN DES GERÄTES, IM VERGLEICH ZU DEN FÜR DIE WERKEINSTELLUNG VERWENDETEN BÄNDERN

Speed switch on NAGRAMASTER		SCOTCH 3M 256	SCOTCH 3M 206	SCOTCH 3M 208	AGFA ★ PER 525	AGFA PEM 468	AMPEX 406	AMPEX 456	BASF LGR 30 P	BASF SPR 50 LHL	BASF SP 52	PYRAL CJ47
Frequency response at 15 ips *Bande passante à 38 cm/s* Frequenzgang bei 38 cm/s	30 Hz → 20 kHz	± 2 dB (± 1.5 dB)	=		=	+ 3 dB – 2 dB	=	=	=	=		+ 2 dB – 3 dB
Max recording level *Niveau max d'enregistrement* Maximaler Aufnahmepegel	at *à* 15 kHz bei	– 9 dB	=		=	+	=	+	=	=		–
3rd harmonic distortion at 1 kHz *Distorsion H3 à 1 kHz* Klirrfaktor K3 bei 1 kHz	recording at *enregistrement à* +4 dB Aufnahmepegel	3 %* (2 %)	=		4 % (2 %)	=	=	=	=	=		=
Signal to noise ratio *Rapport signal/bruit* Geräuschspannungsabstand	ASA A Filter ref. *pondéré ASA A, réf.* +4 dB ASA A bewertet, Ref.	75 dB (76.5 dB)	=		– –	=	=	+	– –	–		–
Level variation *Ecart de niveau* Pegelunterschied	Tape/direct *Lecture/Direct* Hinterband/Vorband	± 1 dB	=		=	=	=	+	=	=		+
Signal to DC noise ratio *Rapport signal/bruit de modulation D.C.* Gleichfeldrauschspannungsabstand	ASA A Filter ref. *pondéré ASA A réf.* +4 dB ASA A bewertet, Ref	64 dB	– –		–	=	=	+	– –	=		– –
Print through layer to layer *Effet de copie entre spires* Kopierdampfung auf die Nachbarwindung	after 24 h at 77° F *après 24 h à 25° C* nach 24 Std bei 25° C	56 dB	– –		+	+	– –	– –	+	–		=
Position of the bias switch *Position du commutateur de prémagnétisation* Position des Vormagnetisierungswählers	with regard to the protocol *par rapport au protocole* hinsichtlich des Protokolls	=	=		–1 Position	=	=	=	=	–1 Position		–1 Position
Speed switch on 15 IPS (38 cm/s)												
Frequency response at 15 ips *Bande passante à 38 cm/s* Frequenzgang bei 38 cm/s	30 Hz → 20 kHz	± 2 dB (± 1.5 dB)	=	=	=	+ 3 dB – 2 dB	=	=	=	=	=	–
Max recording level *Niveau max d'enregistrement* Maximaler Aufnahmepegel	at *à* 15 kHz bei	– 2 dB	=	=	=	+	=	+	+	+	=	–
3rd harmonic distortion at 1 kHz *Distorsion H3 à 1 kHz* Klirrfaktor K3 bei 1 kHz	recording at *enregistrement à* +4 dB Aufnahmepegel	2 % (1 %)	=	=	=	=	=	=	=	3 %	=	3 %
Signal to noise ratio *Rapport signal/bruit* Geräuschspannungsabstand	ASA A Filter ref *pondéré ASA A, réf.* +4 dB ASA A bewertet, Ref	71.5 dB (73.5 dB)	=	=	– –	=	=	+	– –	–	– –	–
Level variation *Ecart de niveau* Pegelunterschied	Tape/direct *Lecture/Direct* Hinterband/Vorband	+ 1 dB	=	– –	=	=	=	=	=	=	– –	+
Signal to DC noise ratio *Rapport signal/bruit de modulation D.C* Gleichfeldrauschspannungsabstand	ASA A Filter ref. *pondéré ASA A, réf.* +4 dB ASA A bewertet, Ref	64 dB	– –	+	–	=	=	+	– –	=	– –	– –
Print through layer to layer *Effet de copie entre spires* Kopierdampfung auf die Nachbarwindung	after 24 h at 77° F *après 24 h à 25° C* nach 24 Std bei 25° C	56 dB	– –	=	+	+	– –	– –	+	–	=	=
Position of the bias switch *Position du commutateur de prémagnétisation* Position des Vormagnetisierungswählers	with regard to the protocol *par rapport au protocole* hinsichtlich des Protokolls	=	=	=	–1 Position	=	=	=	=	–1 Position	=	–1 Position
Speed switch on 7 1/2 IPS (19 cm/s)												
Frequency response at 7 1/2 ips *Bande passante à 19 cm/s* Frequenzgang bei 19 cm/s	30 Hz → 15 kHz	± 2 dB (+ 1 dB)	=	+ 2 dB 3 dB	=	+ 3 dB – 2 dB	+ 2 dB – 3 dB		+ 2 dB – 3 dB	=		+ 2 dB – 4 dB
3rd harmonic distortion at 1 kHz *Distorsion H3 à 1 kHz* Klirrfaktor K3 bei 1 kHz	recording at *enregistrement à* +4 dB Aufnahmepegel	2 % (1 %)	=	=	=	=	=		=	=		=
Signal to noise ratio *Rapport signal/bruit* Geräuschspannungsabstand	ASA A Filter ref *pondéré ASA A, réf* +4 dB ASA A bewertet, Ref	68 dB (66.5 dB)	=	=	– –	=	=		– –	–		–
Level variation *Ecart de niveau* Pegelunterschied	Tape/direct *Lecture/Direct* Hinterband/Vorband	+ 1 dB	=	– – –	=	=	–		–	=		–
Signal to DC noise ratio *Rapport signal/bruit de modulation D.C* Gleichfeldrauschspannungsabstand	ASA A Filter ref *pondéré ASA A, réf* +4 dB ASA A bewertet, Ref	64 dB	– –	=	–	=	=		– –	=		– –
Print through layer to layer *Effet de copie entre spires* Kopierdampfung auf die Nachbarwindung	after 24 h at 77° F *après 24 h à 25° C* nach 24 Std bei 25° C	56 dB	– –	=	+	+	– –		+	–		=
Position of the bias switch *Position du commutateur de prémagnétisation* Position des Vormagnetisierungswählers	with regard to the protocol *par rapport au protocole* hinsichtlich des Protokolls	=	=	=	1 Position	=	=		=	–1 Position		–1 Position

NOTES / *REMARQUES* / BEMERKUNGEN :

1. These values are maximum values – typical values are in brackets. They may vary slightly from one batch of tape to another or from one series of recorder to another. For more accurate figures please refer to the "protocole des essais et mesures de sortie" delivered with each recorder.
   Ces chiffres sont des valeurs maximum, les valeurs typiques sont données entre parenthèses. Ils peuvent varier légèrement d'un lot de bande à un autre ou d'une série d'appareils à une autre. Pour des chiffres précis, se reporter au protocole livré avec chaque appareil.
   Die angegebenen Werte sind Maximalwerte, die typischen Werte sind in Klammern. Die Werte können von einer Bandlieferung zur anderen leicht abweichen, ebenfalls von einer Geräteserie zur anderen. Für genaue Zahlen siehe mitgeliefertes Messprotokoll.

2. With the tapes marked * a different adjustment of the predistortion system would result in a distortion of less than 2 %, but this adjustment would be less convenient for all other tapes.
   *Pour les bandes désignés par * un réglage différent de la prédistorsion permettrait une distortion inférieure à 2 %, mais au détriment de toutes les autres bandes.*
   Bei den mit * bezeichneten Bänder könnte eine andere Einstellung der Klirrkompensation den Klirrfaktor unter 2 % reduzieren; jedoch wäre die Einstellung für die anderen Bändern schlechter.

3. Symbol signification / *Signification des signes* / Zeichenerklärung:

=	similar *similaire* identisch	+	improvement or increase of	+ 0 dB → + 2 dB	–	deterioration or decrease of	– 0 dB → – 2 dB
		+ +	*amélioration ou augmentation allant de*	+ 2 dB → + 4 dB	– –	*détérioration ou diminution allant de*	– 2 dB → – 4 dB
		+ + +	Verbesserung oder Erhöhung um	+ 4 dB → + 6 dB	– – –	Verschlechterung oder Verminderung um	– 4 dB → – 6 dB

NAGRA KUDELSKI

PRODUCT: NAGRA IV–S

DATE: September 1981

Nº 06-3

SUBJECT: Mike/Line Switch
Commutateur Mike/Line

The NAGRA IV–S from serial number 0603535 are fitted with a new MIKE/LINE switch which has an intermediate position allowing combined recording, line input (right channel) and mike input (left channel).
This modification can be easily carried out on recorders with serial numbers lower than 0603535.
Order under code number 40.45.720.202 "Nikkai switch M–2020/S ON–ON–ON type and wire per following diagram.

Les NAGRA IV–S à compter du no. de série 0603535 sont équipés d'un nouveau commutateur MIKE/LINE qui possède une position intermédiaire, non mentionnée sur la plaque frontale, permettant l'enregistrement mixte entrée ligne (canal droit) entrée micro (canal gauche).
Cette modification peut être aisément effectuée sur les appareils précédant le no 0603535
Pour cela commander un commutateur Nikkai M–2020/S type ON–ON–ON sous le numéro code 40.45.720.202 et le câbler comme sur le dessin ci–dessous.

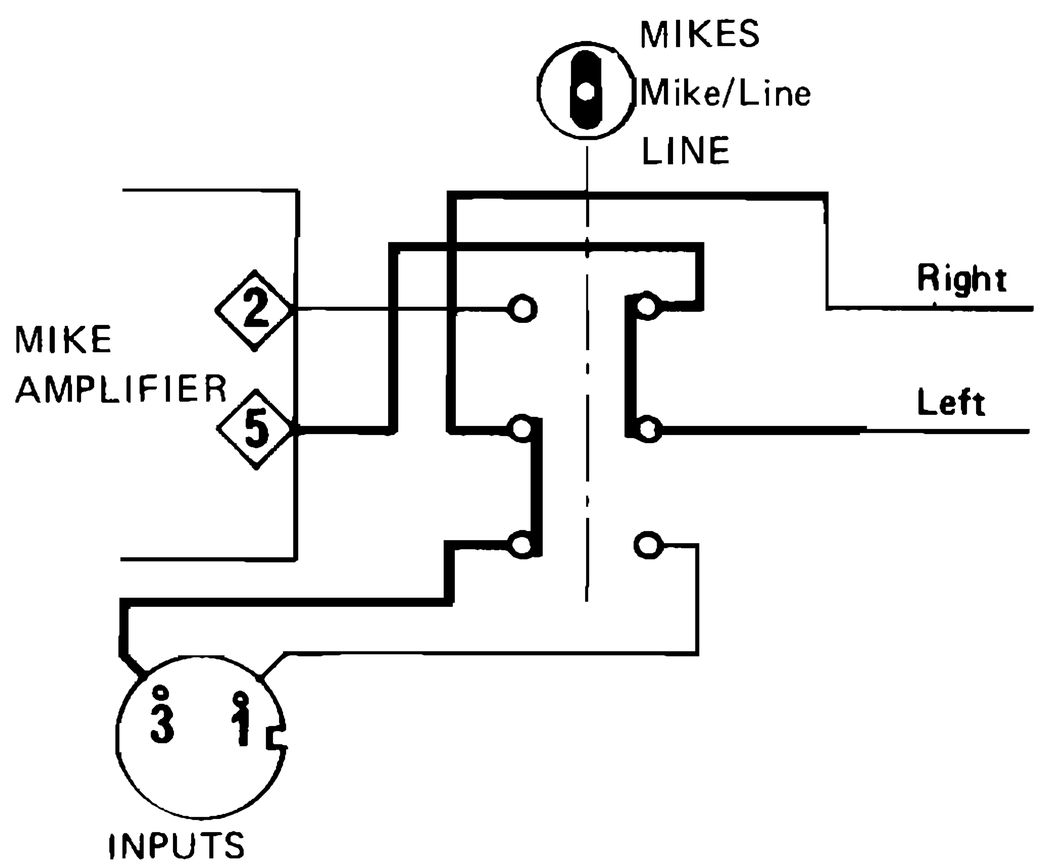

PRINTED IN SWITZERLAND BY KUDELSKI SA

NAGRA KUDELSKI
KUDELSKI SA 1033 CHESEAUX / SWITZERLAND, Phone: 021 91 21 21, Telex. 459 302 nagr ch

PRODUCT: NAGRA IV–S

DATE: October 1983

SUBJECT: Signal distortion at low frequencies

Nº 06-4

The NAGRA IV–S mike preamplifier distorts low frequency signals (< 28 Hz). The resulting harmonic frequencies are recorded on the tape and increase the noise level (due for instance to mike handling).

The following modification leads to:
- An improved saturation threshold of the mike preamplifier at low frequencies
- A 10 dB improvement of the saturation threshold at 10 Hz with the mike type selector set to position 6 (T+12 V)

MODIFICATION

Modification to be carried out on the microphone preamplifier / Order no. 91 06720 000

Board A2
Replace 4.7 μF capacitor C9 by a 39 μF, 20 %, 10 V capacitor / KSA no. 52 12023 900
Board A3
C59: same new value as C9

SUJET : DISTORSION DES FREQUENCES BASSES

Le préamplificateur de microphone du NAGRA IV–S distord les signaux basse fréquence (< 28 Hz). Les fréquences harmoniques qui en résultent sont enregistrées sur la bande et augmentent le bruit (dû par exemple à la manipulation des microphones).

La modification suivante apporte:
- Un recul du seuil de saturation du préamplificateur aux fréquences basses
- Une amélioration de 10 dB du seuil de saturation à 10 Hz avec le sélecteur de type de microphone en position 6 (T +12 V)

MODIFICATION

Modification à effectuer sur le préamplificateur de microphone
No. de commande 91 06720 000

Circuit A2
Remplacer le condensateur C9 de 4,7 μF par un condensateur de 39 μF, 20 %, 10 V
No. KSA 52 12023 900

Circuit A3
C59: même nouvelle valeur que C9

PRINTED IN SWITZERLAND BY KUDELSKI SA

NAGRA KUDELSKI
KUDELSKI SA 1033 CHESEAUX / SWITZERLAND, Phone: 021 91 21 21, Telex: 459 302 nagr ch

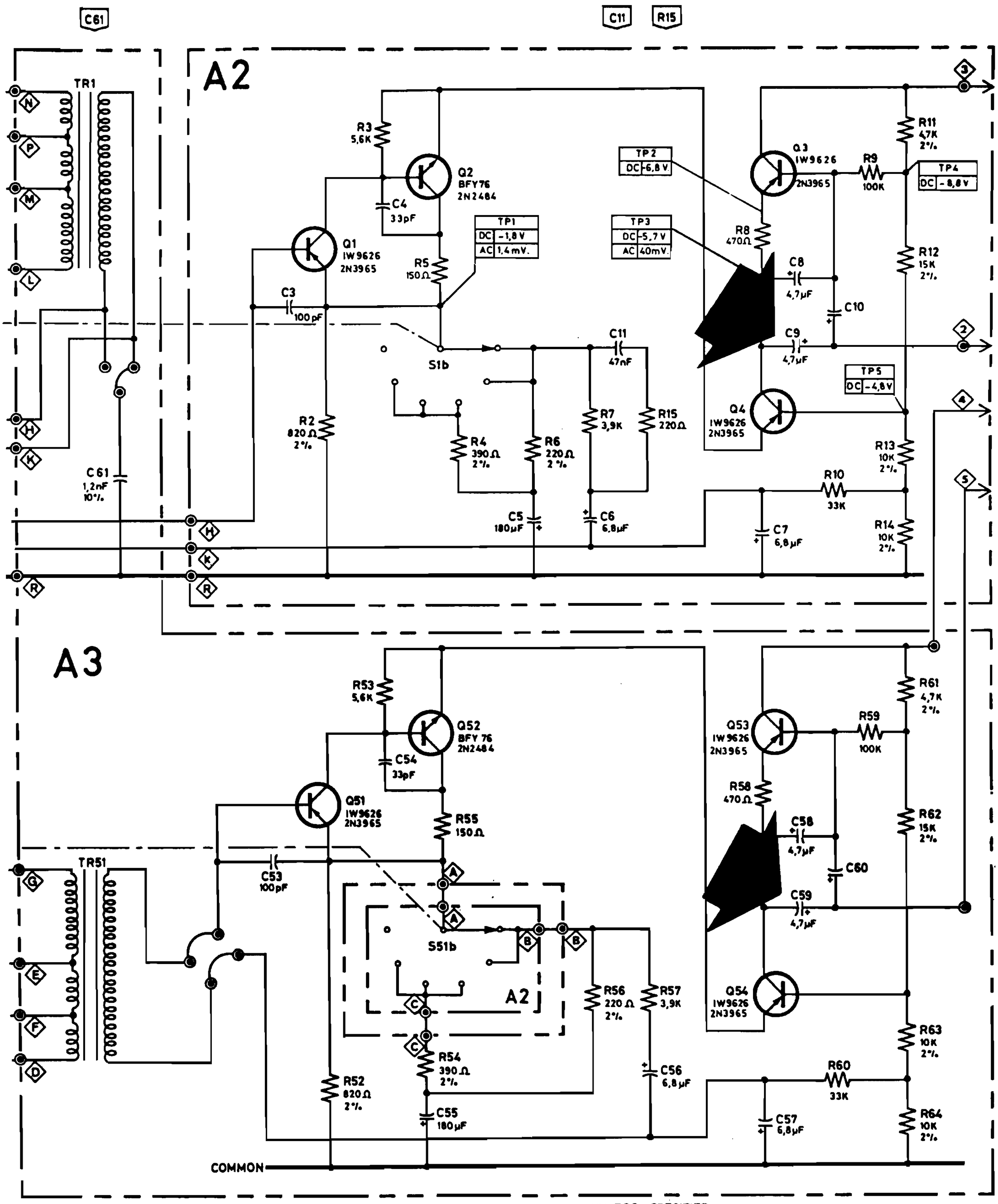

MEASURING INSTRUMENT
D.C. Voltmeter 40'000/V
A.C. Voltmeter (e.g. Bruël & Kjaer type 2112 or 2606 + 1615 or equivalent)
A.C. Measurement should be made at 1kHz
Voltages may vary ± 10%

UNLESS SPECIFIED
ALL RESISTORS ALLEN-BRADLEY 1/4 W ± 10%
ALL CAPACITORS ± 20%

KUDELSKI S.A. Dept. NAGRA CH - 1033 CHESEAUX Switzerland	NAGRA MAGNETIC RECORDERS INC. NEW YORK, N.Y. 10036 19 West 44 th Street	A1-2-3
NAGRA IV-S	0906 720 000	1.5.74
MICROPHONE PREAMPLIFIER		

This drawing is confidential and may not be divulged in whole or in part to a third party

PRODUCT: NAGRA IV–S Time Code /Code Horaire ..... DATE: .. February 1985

SUBJECT: Modification of the Time Code version into FM Pilot .....

Modification de la version Code Horaire en version Pilote FM .....

N° 06-5

The time code version of the NAGRA IV–S can be used to record FM pilot signals providing the following modifications are carried out.
These modifications can be effected in two different ways:

– Carrying out a complete modification by replacing and calibrating the 3rd head (2) as well as the 3rd track record/playback board (1). This solution ensures compatibility with the standards.

– Carrying out a quick modification by replacing and calibrating the 3rd track record/playback board only (1). Note that in this case the recorded FM signal level will be 6 dB lower due to the track width used (0.35mm for time code instead of 0.8mm for FM pilot).

1 REPLACING THE TIME CODE BOARD

Required parts:	one Nagra IV–S service manual	no. 20.06.004.253
	one FM pilot board	no. 91.06.774.000
	one modified shielding	no. 71.06.020.000
	two thickness washers plastic 2.1 / 4.0 x 1.5	no. 01.06.755.002
	one spacer, M2 x 12.2	no. 01.06.001.002
	three screws, M2 x 5	no. 30.01.022.536 (pilot board)
	five screws, M2 x 8	no. 30.01.022.736 (shielding)
if necessary:		
	one frequencymeter board (A25)	no. 06.780 (50 Hz) QFMS–50
		no. 06.781 (60 Hz) QFMS–60
	two screws, M2 x 5	no. 30.01.022.536 (A25 board)
	one pilot generator board (A26)	no. 06.697 (50/60 Hz) QSGX–3
	one screw, M2 x 5	no. 30.01.022.536 (A26 board)

Instructions:

– Remove the batteries
– Open the recorder
– Unsolder the ground wire and remove the time code board shielding
– Disconnect its five connecting plugs, A, B, C, D and E
– Unscrew the two screws located on the two white plastic cylinder and remove the time code board
– Cut the bindings of the two harnesses leading to connect D and E
– Slide the D and E connectors between the loudspeaker and its amplifier
– Fix the B and C plugs onto the battery box (mind the components of the pilot board)
– Screw the spacer on the battery box (on the right side of the mike power supply, screw from inside the battery box)
– If only the time code board is to be changed, without replacement of the 3rd track head, 47 kOhms resistor R8/A24 of the FM pilot circuit will have to be replaced by a 100 kOhms resistor (to increase the playback signal gain). Normally the record level should not be readjusted
– If required, install frequencymeter board A25 on the FM pilot circuit.

PRINTED IN SWITZERLAND BY KUDELSKI SA

NAGRA KUDELSKI
KUDELSKI SA 1033 CHESEAUX / SWITZERLAND, Phone: 021 91 21 21, Telex: 459 302

– Plug in the pilot board and secure it with the three M2 x 5 screws on its lower edge. (see Note 1 below)
– If necessary plug in the A26 pilot generator board and secure it. If this circuit is not mounted, use the two thickness washers, one on the spacer and one on the connector, to compensate for the difference in height (A plug)
– Carry out the adjustments as described in chapter 6 paragraph 12.2 to 12.7 and 13, 14 of the service manual
– Install the modified shielding, secure the screws (M2 x 8) with Loctite and resolder the ground wire.

Note:
1) From now on the FM pilot boards will be fitted with a connector permitting their connection to a 3rd track head (A plug). The old FM pilot board can be easuly modified as follows:

Required parts:	Adapting Kit including one connector support, one connector board and one right angle male connector	no. 71.06.023.000

Installation:
– Place the right angle connector on the connector circuit, cut the pins to be flush with the board and solder
– Solder two wires (black and red, length 15mm) on the pilot board, soldering side as in drawing
– Glue the connector support onto the circuit epoxy resin, at a distance of 102mm from the right edge of the board (text on soldering side)
– Glue the connector circuit onto the support and solder the wires as shown in the drawing

2) The new FM pilot board shieldings are modified in order to allow the A connector pass through. Old shieldings cannot be modified.

2 REPLACING THE TIME CODE HEAD

Required parts:	one FM pilot head	no. 71.06.220.000
	one azimuth washer set	no. 71.04.388.000

Installation:
– Remove the time code head and replace it by the FM pilot head
– Adjust head height and azimuth using the set of washers (refer to chapter 6 paragraph 12.1 of the service manual).

Le NAGRA IV–S code horaire peut être utilisé pour enregistrer un signal pilote FM conventionnel, à condition d'effectuer les modifications suivantes.
Cependant deux solutions sont possibles:

- Faire une modification complète comprenant le remplacement et le réglage de la tête et du circuit d'enregistrement/lecture 3ème piste (1) et (2). Ceci afin d'assurer la compatibilité avec les normes.
- Faire une modification rapide ne comprenant que le remplacement et le réglage du circuit 3ème piste (1). Il faut noter que dans ce cas, le niveau du signal FM enregistré sur la bande sera inférieur d'environ 6 dB du fait de la largeur de piste utilisée (0,35mm pour le code horaire au lieu de 0,8mm pour le signal pilote FM).

1 REMPLACEMENT DU CIRCUIT CODE HORAIRE

Matériel:	un manuel de service Nagra IV–S	no. 20.06.004.253
	un circuit pilote FM	no. 91.06.774.000
	un blindage modifié	no. 71.06.020.000
	deux rondelles d'épaisseur en plastique 2,1 / 4,0 x 1,5	no. 01.06.755.002
	une entretoise M2 x 12.2	no. 01.06.001.002
	trois vis M2 x 5	no. 30.01.022.536 (circuit pilote)
	cinq vis M2 x 8	no. 30.01.022.736 (blindage)
le cas échéant:		
	un circuit fréquencemètre (A25)	no. 06.780 (50 Hz) QFMS–50
		no. 06.781 (60 Hz) QFMS–60
	deux vis M2 x 5	no. 30.01.022.536 (cc fréquencemètre)
	un circuit générateur pilote (A26)	no. 06.697 (50/60 Hz) QSGX–3
	une vis M2 x 5	no. 30.01.022.536 (cc générateur pilote)

Opérations:

- Enlever les piles ou batteries contenues dans l'appareil
- Ouvrir l'appareil
- Dessouder le fil de masse et enlever le blindage du circuit code horaire
- Déconnecter les cinq fiches de raccordement
- Dévisser les deux vis montées sur des cylindres de plastique blanc et enlever délicatement le circuit.
- Couper la ligature des deux torches menant aux fiches D et E et les glisser entre le haut–parleur et son circuit amplificateur.
- Fixer les deux fiches B et C, dans leur prolongement, sur le boitier à piles (attention aux composants du circuit pilote).
- Monter l'entretoise sur le bac à piles (près du coin en haut à droite de l'alimentation micro, fixation par l'intérieur du bac)
- Si l'on ne procède qu'au changement de circuit, sans changement de la tête 3éme piste, il faudra remplacer sur le circuit pilote FM la résistance R8/A24 de 47 kOhms par une résistance de 100 kOhms (augmentation du gain du signal en lecture). En principe, le niveau d'enregistrement ne doit pas être modifié
- Le cas échéant monter le circuit du fréquencemètre A25 sur le circuit pilote
- Mettre en place le circuit pilote et le fixer avec les trois vis M2 x 5 le long de son bord inférieur(voir note 1 ci-après)
- Si besoin monter le circuit générateur pilote A26. (Au cas ou ce circuit n'est pas monté, il faudra, pour compenser la différence de hauteur, utiliser les rondelles d'épaisseur, l'une sur l'entretoise, l'autre sur le connecteur)
- Connecter le tête d'enregistrement/lecture 3ème piste au circuit pilote (connecteur A)
- Effectuer les régalges décrits dans le manuel de service au chapitre 6, paragraphes 12.2 à 12.7 et 13, 14
- Monter le blindage modifié, assurer les vis de fixation (M2 x 8) avec de la Loctite et souder le fil de masse.

Notes:

1) Les circuits pilote FM sont dorénavant équipés du connecteur permettant la liaison du circuit avec la tête 3ème piste (fiche A). Les anciens circuits peuvent aisément être modifiés de la manière suivante:

Matériel: Kit d'adaptation no. 71.06.023.000
comprenant: un support de connecteur, un circuit de connecteur et un connecteur mâle coudé

Opérations

- Mettre en place le connecteur coudé sur le circuit connecteur, couper les pattes au ras du circuit et souder
- Sur le circuit pilote, souder deux fils (rouge, noir, 15mm de long) comme indiqué sur le dessin, coté pistes
- Coller avec une résine epoxy le support de connecteur sur le circuit, à une distance de 102 mm du bord droit du circuit (coté pistes, textes lisibles)
- Coller le circuit connecteur sur le support et souder les deux fils rouge et noir comme indiqué sur le dessin

2) Les nouveaux blindages du circuit pilote FM sont modifiés pour permettre le passage du connecteur. Les anciens blindages ne peuvent en aucun cas être modifiés.

2 REMPLACEMENT DE LA TETE CODE HORAIRE

Matériel: une tête pilote FM no. 71.06.220.000
un jeu de rondelle d'azimut no. 71.04.388.000

Opérations:

- Démonter la tête code horaire et la remplacer par la tête pilote
- Ajuster la hauteur et l'azimut en utilisant les rondelles et en vous référant au manuel de service chapitre 6 paragraphe 12.1

DRAWINGS

DESSINS

● Fixing part to be used
fixation à utiliser

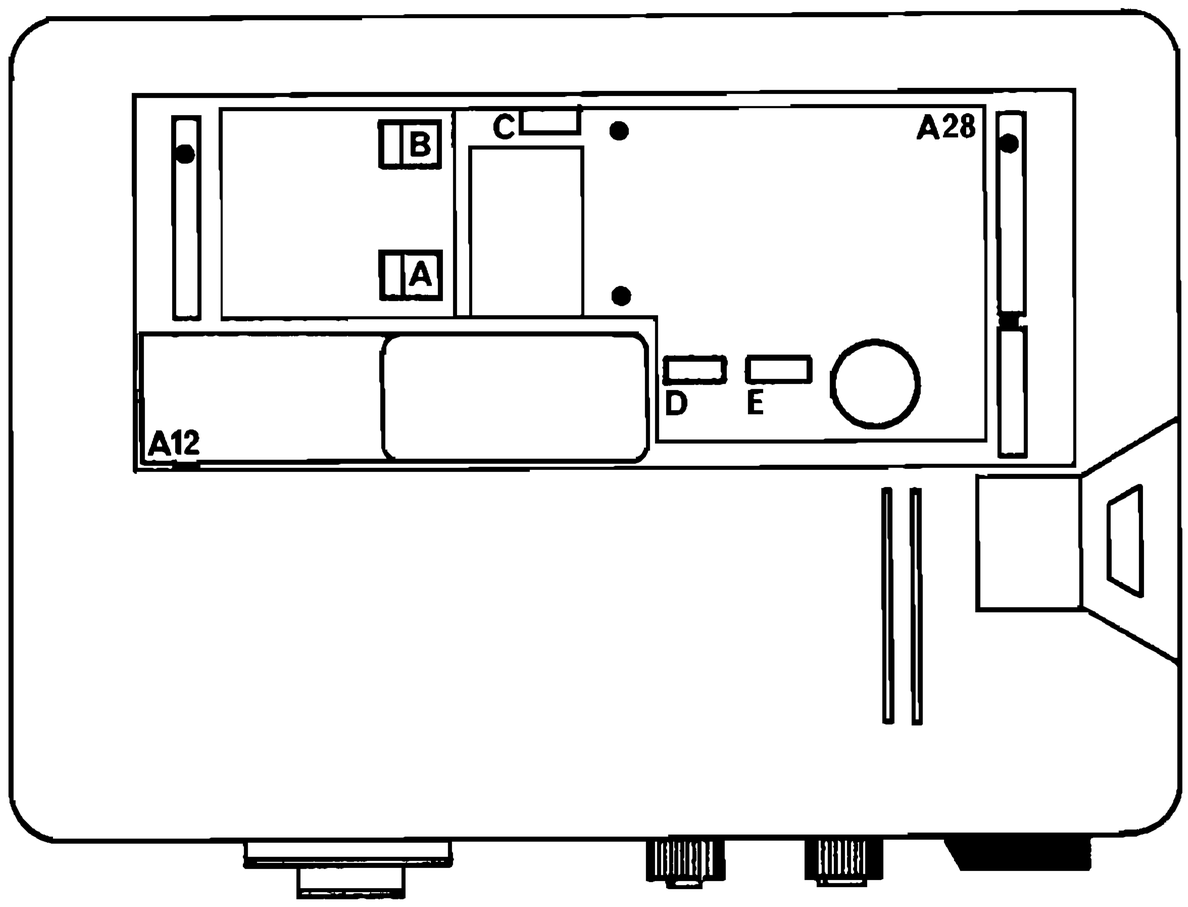

1) NAGRA IV–S time code
with its time code board

NAGRA IV–S code horaire
avec son circuit code horaire

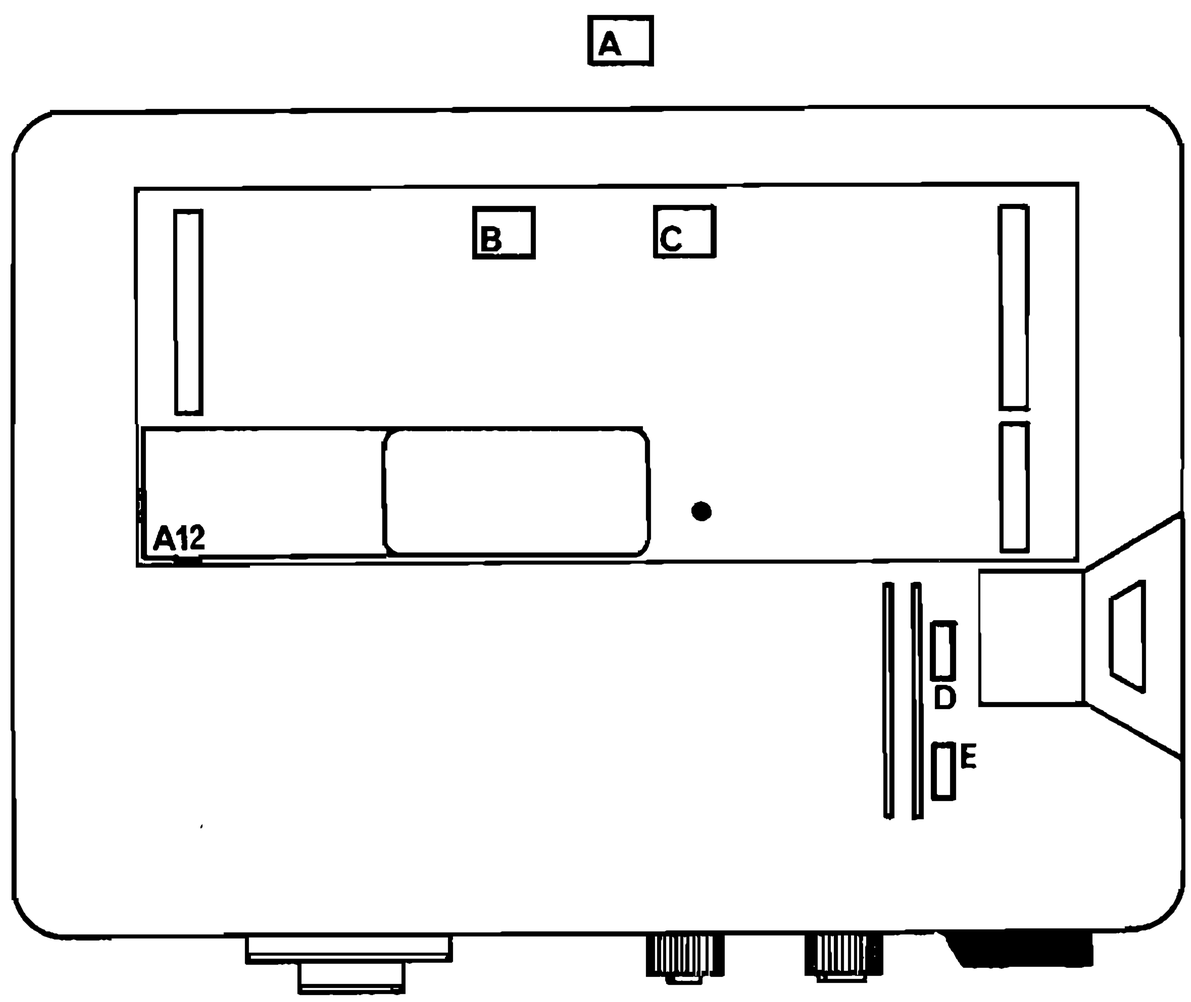

2) NAGRA IV–S time code
prepared for FM pilot modification

NAGRA IV–S code horaire
préparé pour la modification pilote FM

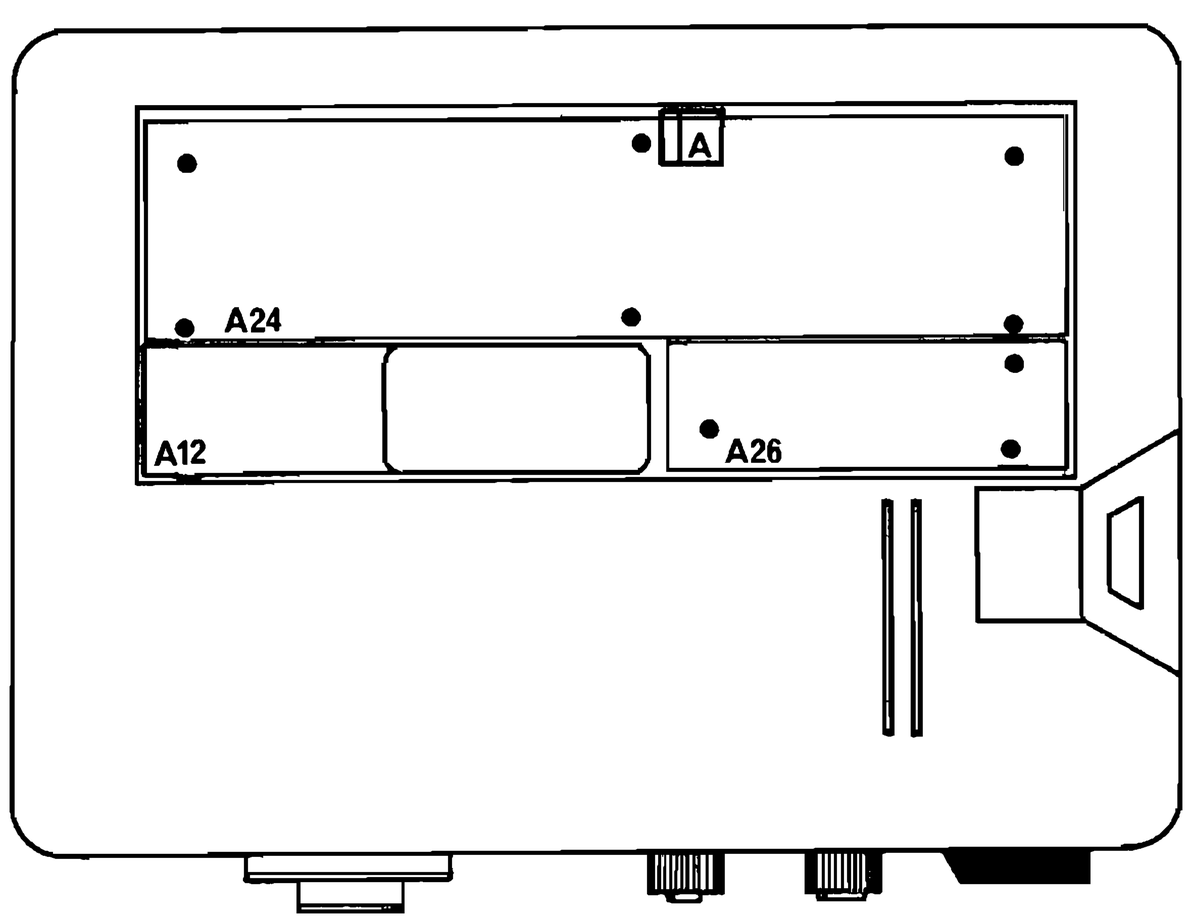

3) NAGRA IV–S time code
fitted with FM pilot board

NAGRA IV–S code horaire
avec circuit pilote FM installé

DRAWINGS

DESSINS

R8 resistor location (FM pilot board A24)

Position de la résistance R8 (circuit pilote FM A24)

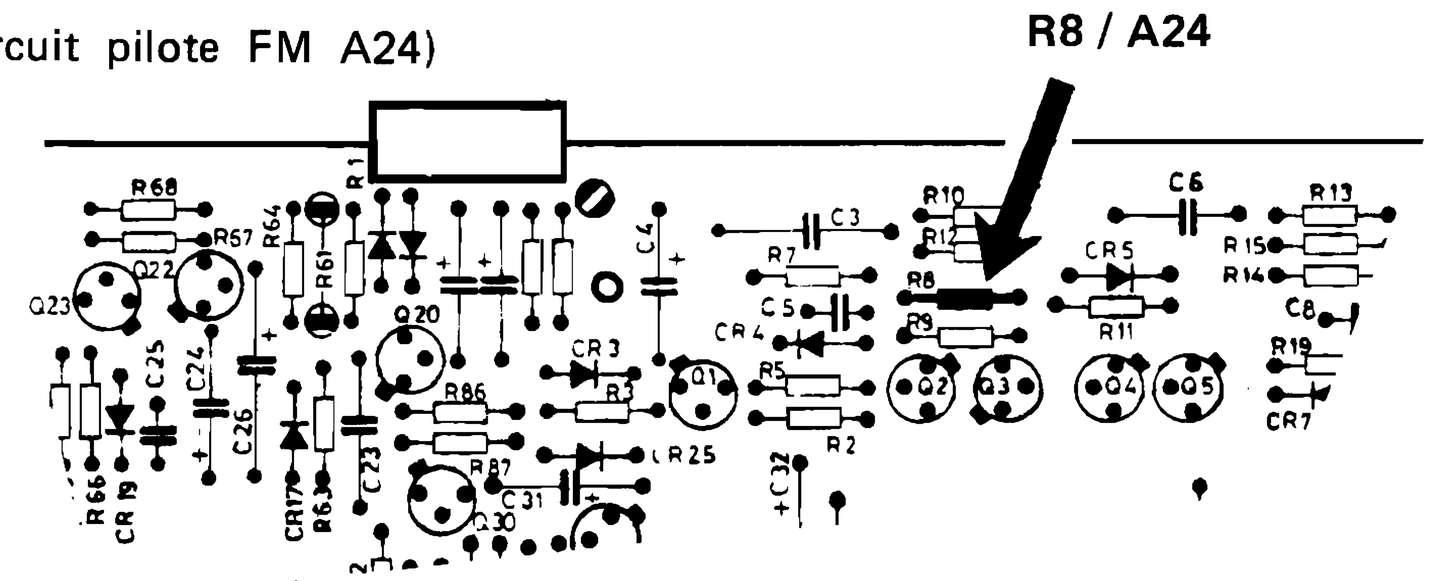

Connector support positioning

Positionnement du support de connecteur

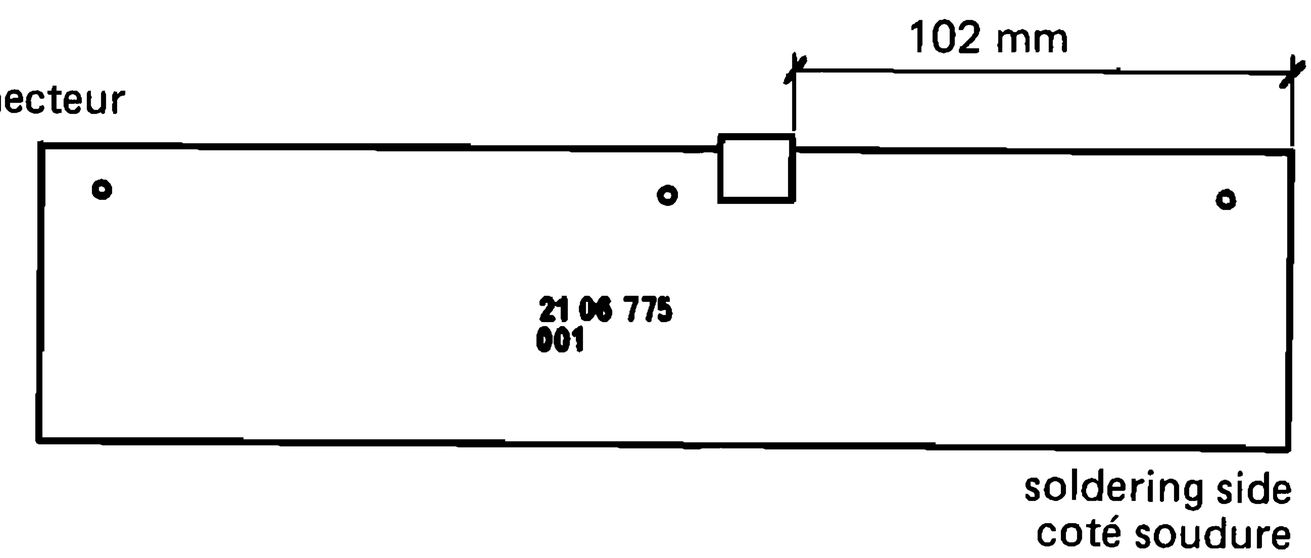

Connector circuit wiring

Cablage du circuit connecteur

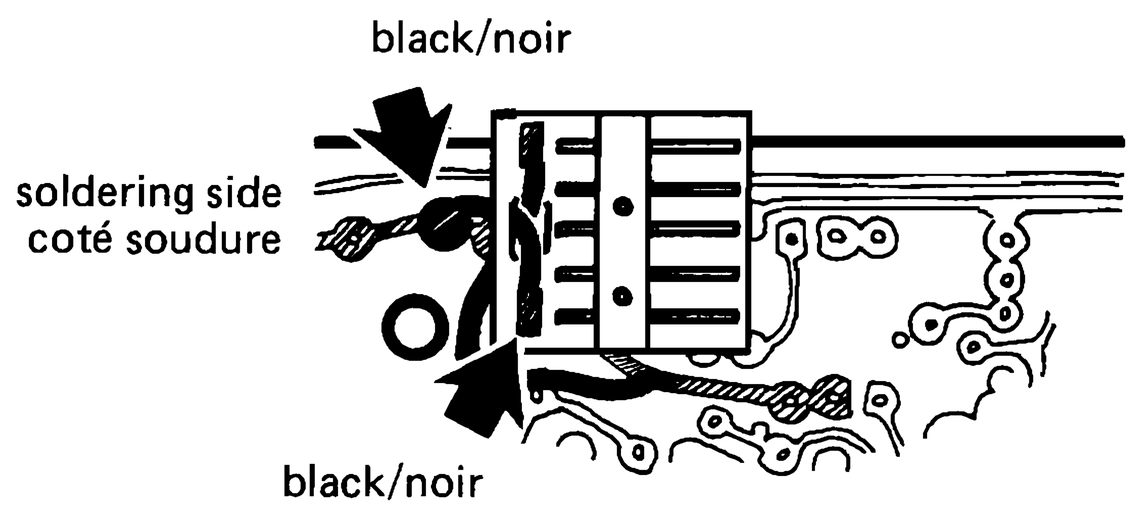

PRODUCT: NAGRA IV–S Time Code / Code horaire **DATE:** September 1985

SUBJECT: Improvement of CPU Reset, when rapidly switching main selector through STOP

Amélioration du déclanchement du Reset CPU lors d'un passage rapide par la position STOP

N° 06-6

Required parts

– piggy–back circuit board P1366 (available on request)

Modification

– remove Time Code Circuits Block
– remove EPROM UR3
– place supplementary circuit P1366 atop of UR4 RAM, components side up. You may use thin double face adhesive tape
– solder white and red wires, as shown
– position black wire, preferably between UR4 and the EPROM connector (inside)
– plug in EPROM UR3
– solder black wire as shown
– remove C8 capacitor (important)
– re–install Time Code Circuit Block
– solder grey wire together with grey one of the battery box interconnection board, as shown

Matériel:

– Circuit piggy–back P1366 (livrable sur demande)

Modification

– enlever le bloc–circuits du code horaire
– enlever l'ERPOM UR3
– placer le circuit supplémentaire P1366 sur le RAM UR4, côté composants vers le haut. On peut utiliser de la bande autocollante double face mince
– souder les fils blanc et rouge, comme indiqué sur le schéma
– positionner le fil noir, de préférence entre UR4 et le connecteur d'EPROM (à l'intérieur)
– installer l'EPROM UR3
– souder le fil noir, comme sur le schéma
– enlever le condensateur C8 (important)
– re–installer le bloc–circuits du code horaire
– souder le fil gris avec le fil gris du circuit d'interconnexion du boîtier à piles, comme indiqué sur le schéma

PRINTED IN SWITZERLAND BY KUDELSKI SA

NAGRA KUDELSKI
KUDELSKI S.A. 1033 CHESEAUX/LAUSANNE, SWITZERLAND, Tel. (021) 91 21 21, Telex. 459 302 nagr ch

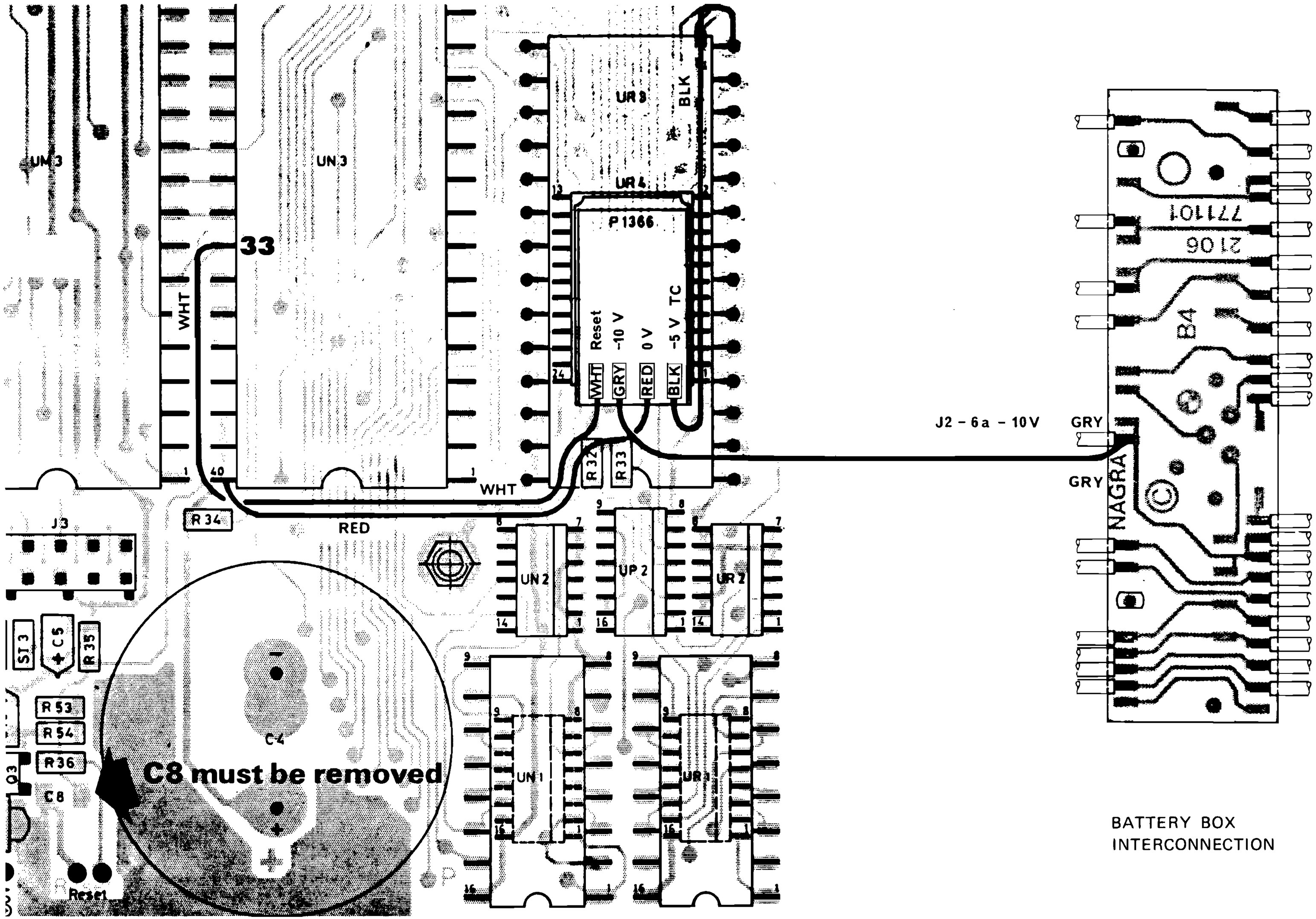

BATTERY BOX
INTERCONNECTION

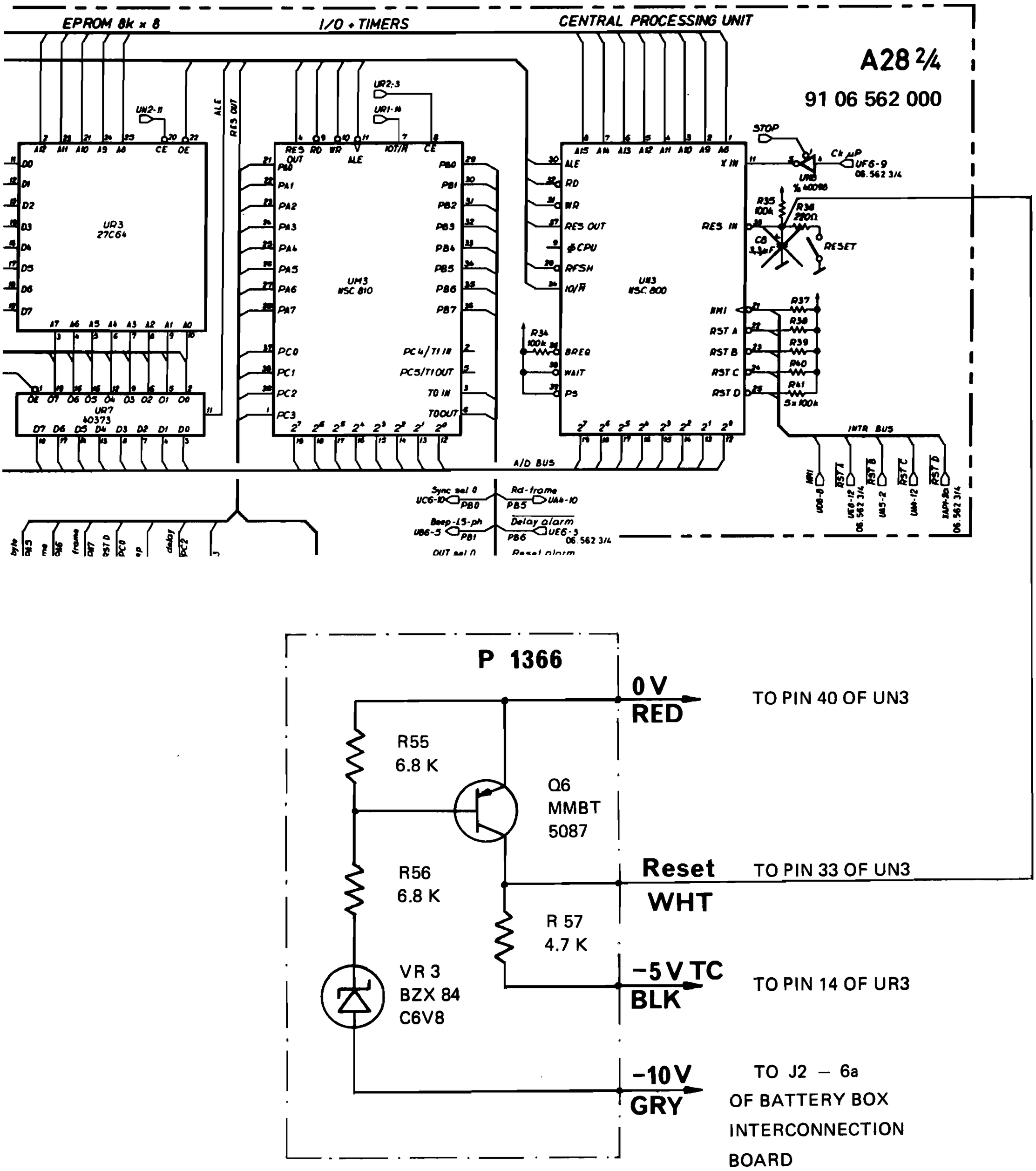

NOTES:

- C8 MUST BE REMOVED
- TO BE APPLIED ON 91 06 562 000 BOARDS WITHOUT INDEX AND WITH INDEX A

PRODUCT: NAGRA IV–S Time Code / Code horaire DATE: February 1986

N° 06-7

SUBJECT: **Improvement of the CPU Reset when rapidly switching the main selector through STOP**

Amélioration du déclanchement du Reset CPU lors d'un passage rapide par la position STOP

Required parts

– piggy–back circuit board P1366 (available on request)

Modification

– remove Time Code Circuits Block
– remove EPROM UR3
– place supplementary circuit P 1366 onto UR4 RAM,components side up.You may use thin double face adhesive tape
– solder white and red wires, as shown
– position black wire, preferably between UR4 and the EPROM connector (inside)
– plug in EPROM UR3
– solder black wire as shown
– solder grey wire to connector P2,PIN 1B,as shown
– remove C8 capacitor (important)
– re–install Time Code Circuit Block

REPLACES AND CANCELS 06-6
REMPLACE ET ANNULE 06-6

Matériel:

– Circuit piggy–back P1366 (livrable sur demande)

Modification

– enlever le bloc–circuits du code horaire
– enlever l'ERPOM UR3
– placer le circuit supplémentaire P1366 sur le RAM UR4, côté composants vers le haut. On peut utiliser de la bande autocollante double face mince
– souder les fils blanc et rouge, comme indiqué sur le schéma
– positionner le fil noir, de préférence entre UR4 et le connecteur d'EPROM (à l'intérieur)
– installer l'EPROM UR3
– souder le fil noir, comme sur le schéma
– souder le fil gris à la broche 1B du connecteur P2,comme indiqué sur le schéma
– enlever le condensateur C8 (important)
– re–installer le bloc–circuits du code horaire

PRINTED IN SWITZERLAND BY KUDELSKI SA

NAGRA KUDELSKI
KUDELSKI S.A. 1033 CHESEAUX/LAUSANNE, SWITZERLAND, Tel. (021) 91 21 21, Telex. 459 302 nagr ch

91 06 562 000

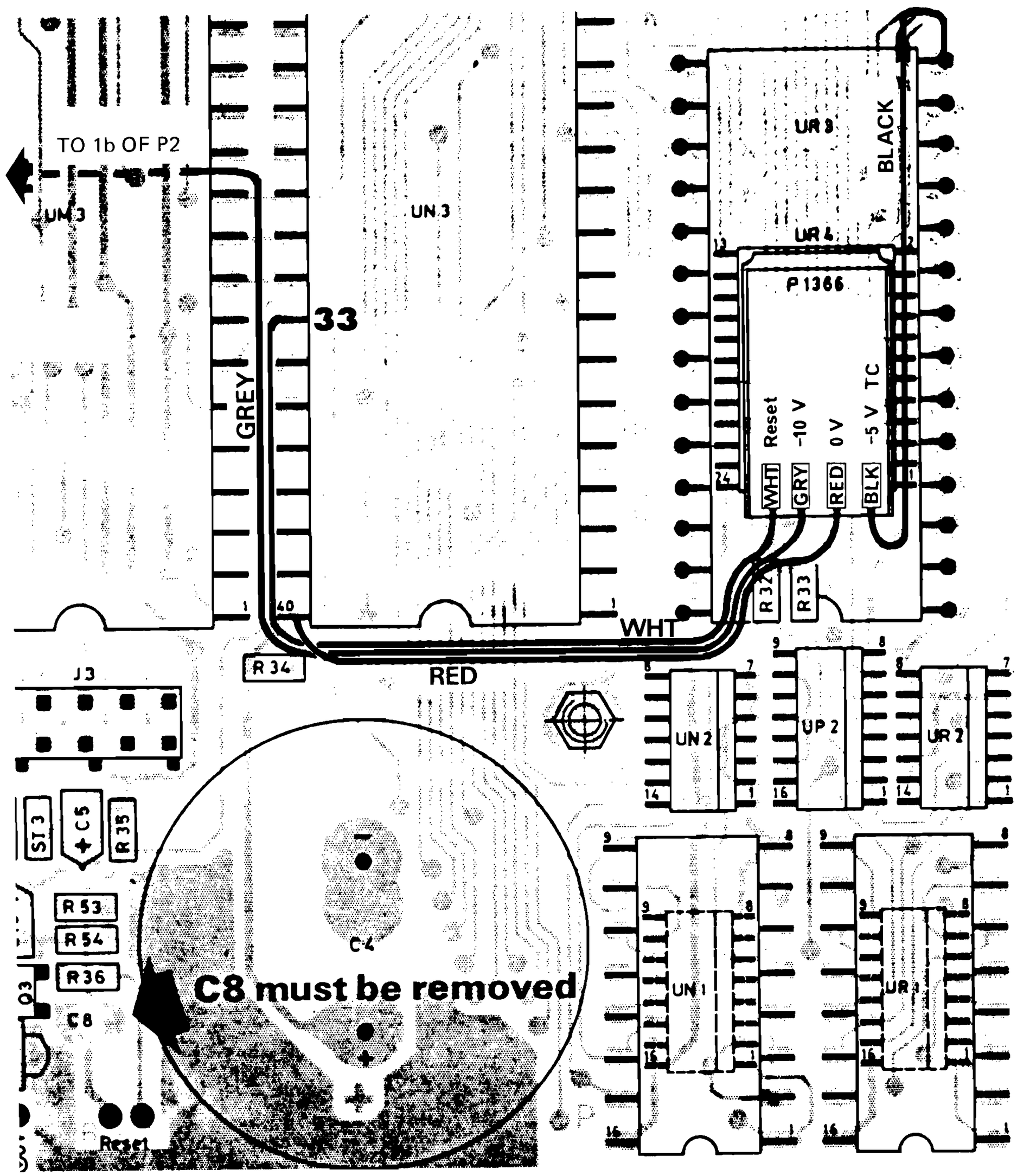

WIRING DETAIL OF P1366

9106562 0000

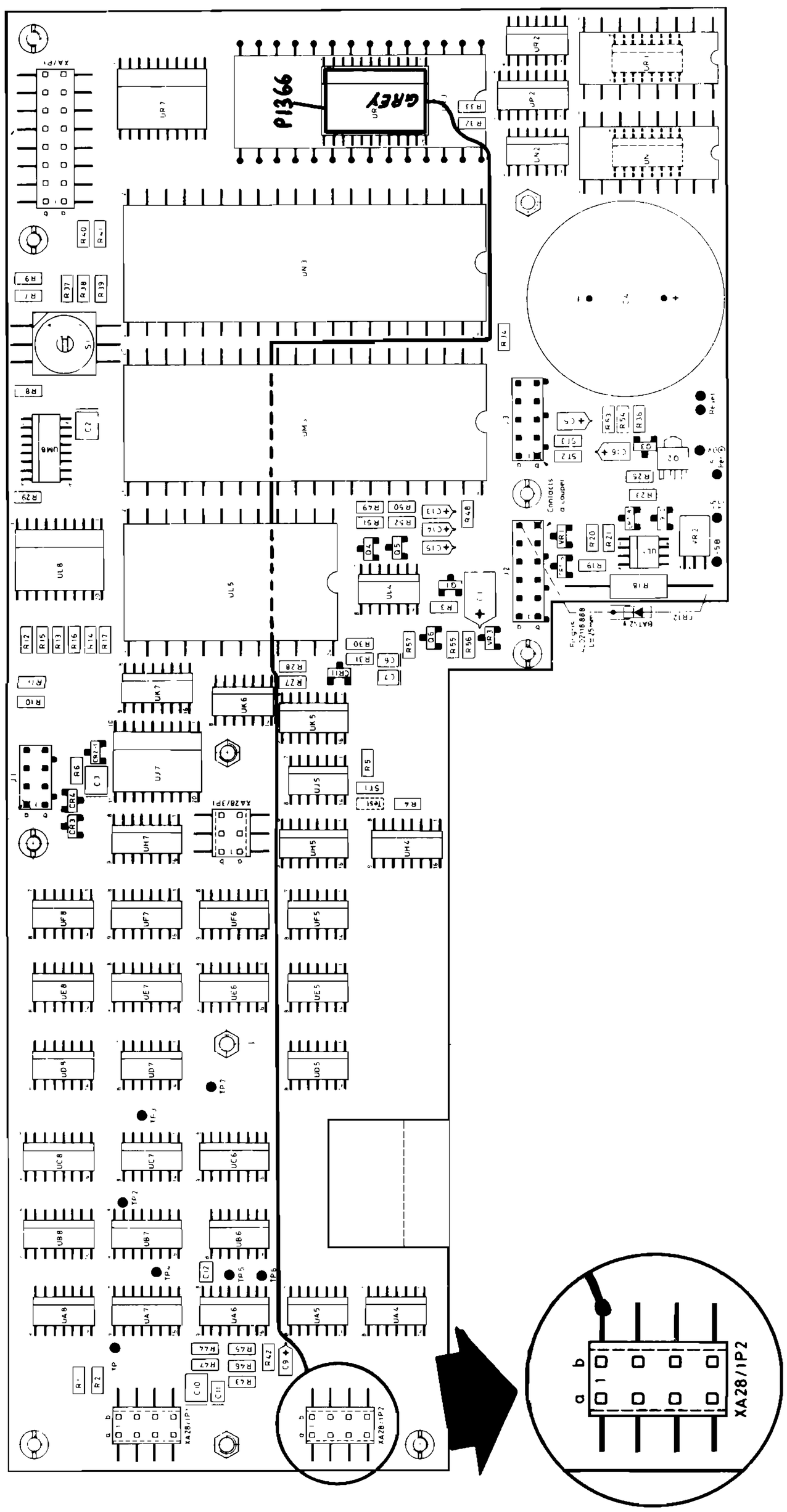

WIRING DETAIL OF P2

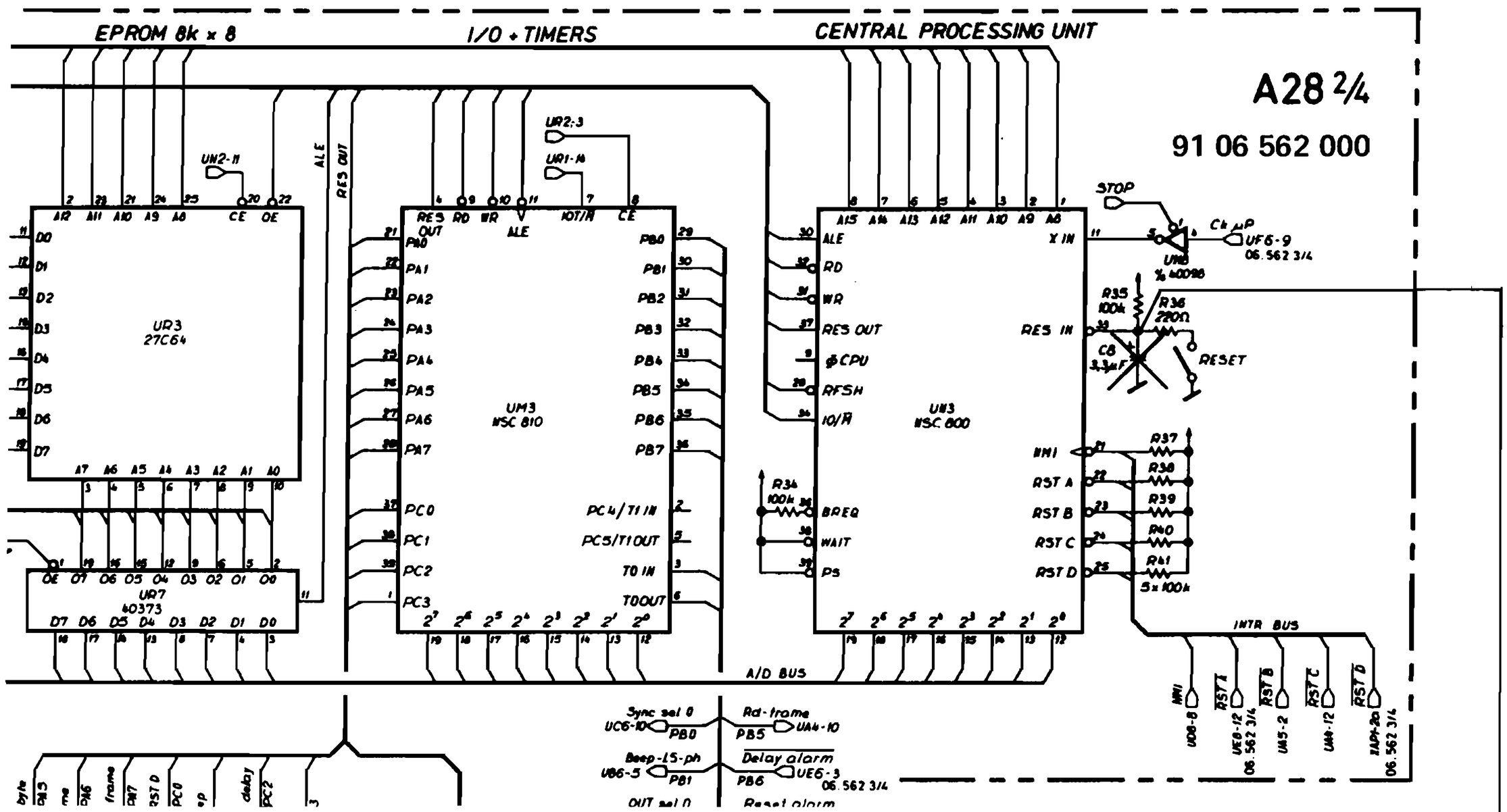

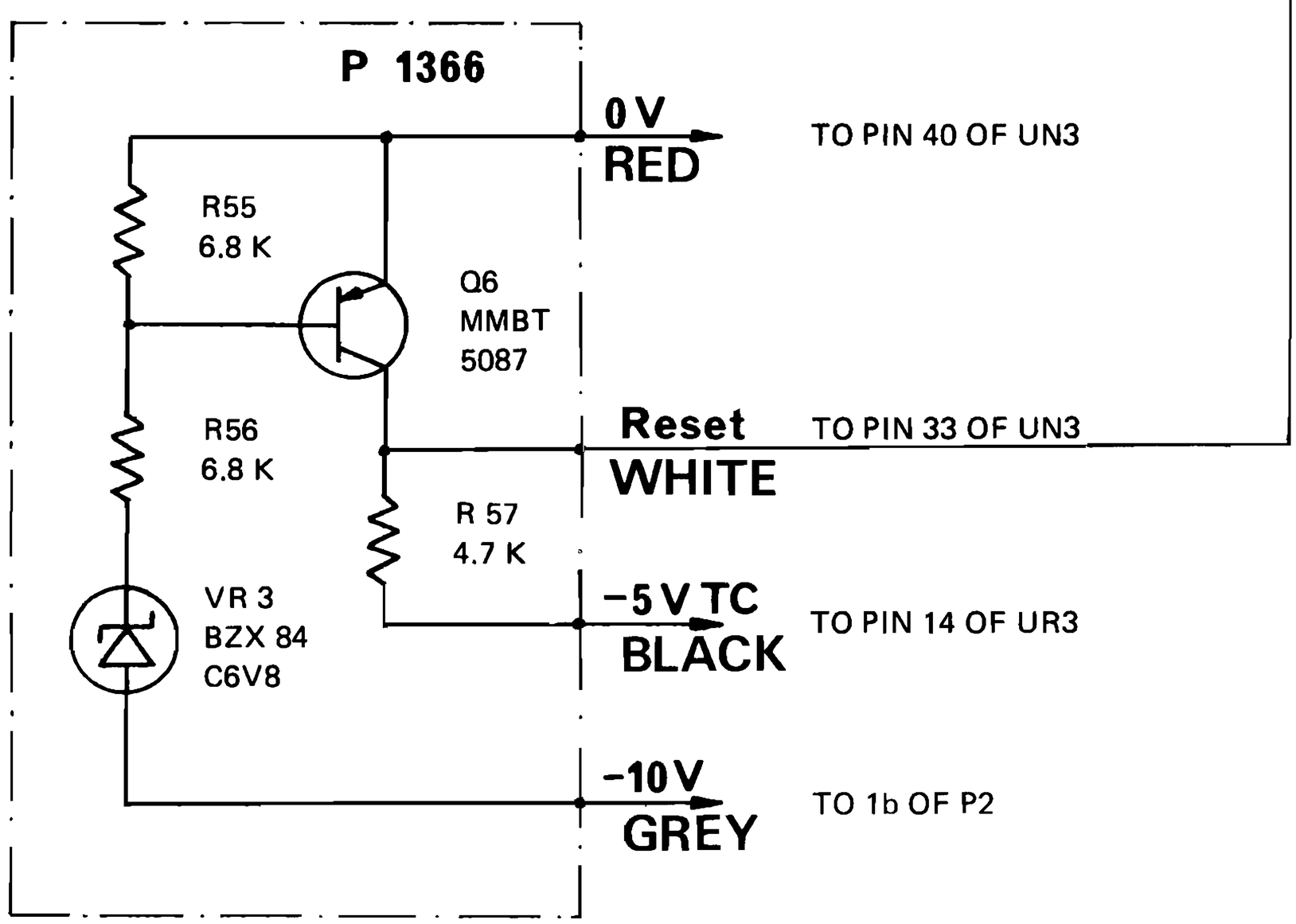

NOTES:

- C8 MUST BE REMOVED
- THIS TECHNICAL INFORMATION APPLIES TO ALL 91 06 562 000 BOARDS BEARING EITHER NO INDEX OR INDEX A .

PRODUCT: Nagra IV-S TC

DATE: December 85

Nº 06-8

SUBJECT: **Erroneous Time Code operation when working off batteries or accumulators close to end of discharge.**

Défaut de fonctionnement du Time Code lorsque le IV–S est alimenté par piles ou par accumulateurs en fin de décharge.

Modification: A CR12 , BAT 42 , diode is to be added to the – 5V voltage stabilizer on main Time Code board 91 06 562 000 (schematic A28 2/4).

Solder this diode between R18/PIN4 of UL1, and –10V taken on the — of C25, on the 91 06 563 000 board

This diode, preassembled with a grey wire, is available under P/N 71 06 024 000.Solder the diode onto R18, and grey wire onto C25. Secure the diode with epoxy resin.

Modification: Une diode CR12 , BAT 42 , est ajoutée au circuit du stabilisateur de tension – 5V sur le circuit de base Code Horaire 91 06 562 000 (schéma A28 2/4).

Souder la diode entre R18 – UL1 patte 4, et – 10V pris sur le – de C25 du circuit 91 06 563 000.

La diode prémontée avec un fil gris est disponiblesous le No 71 06 024 000. Souder la diode sur R18 et le fil gris sur C25. Fixer la diode avec de l'araldite.

PRINTED IN SWITZERLAND BY KUDELSKI SA

NAGRA KUDELSKI

KUDELSKI S.A. 1033 CHESEAUX/LAUSANNE, SWITZERLAND, Tel. (021) 91 21 21, Telex. 459 302 nagr ch

CR 12 MOUNTING

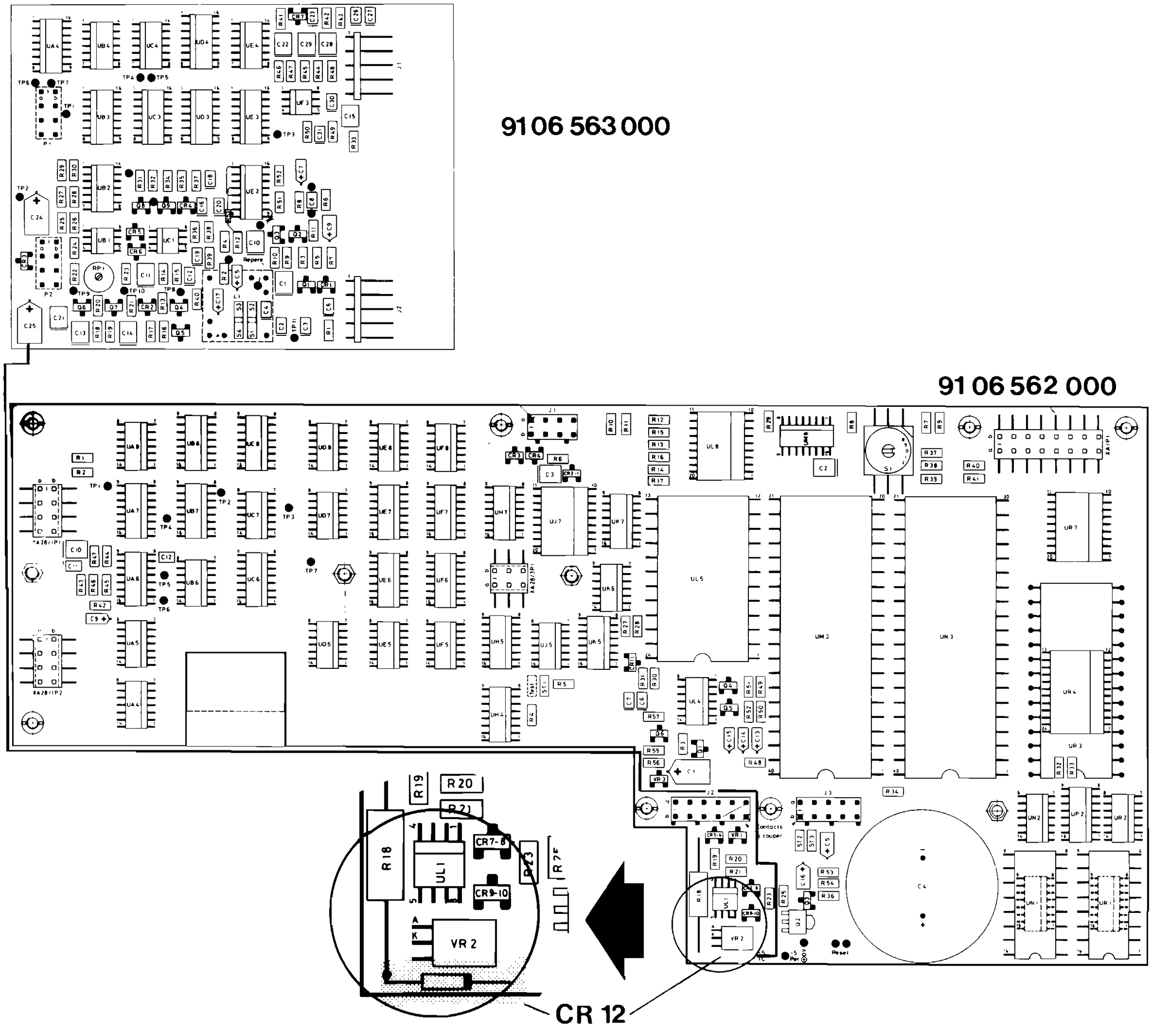

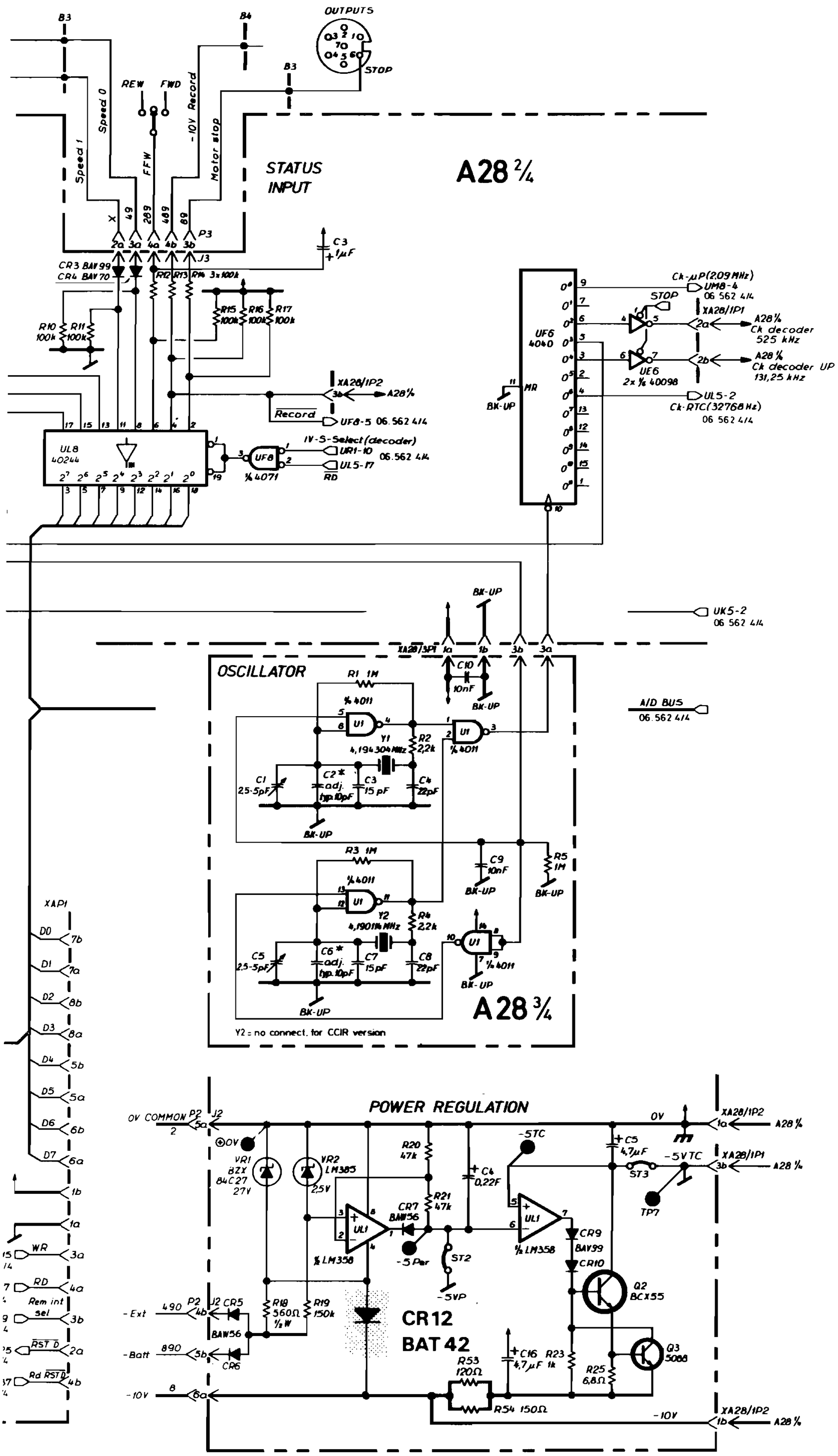
STATUS INPUT
A28 2/4
OUTPUTS
STOP
REW
FWD
Speed 0
Speed 1
FFW
-10V Record
Motor stop
CR3 BAV99
CR4 BAV70
C3 1µF
UL8 40244
UF8 1/6 4071
IV-S-Select (decoder)
UR1-10
UL5-17
06.562 414
Record
UF8-5 06.562 414
UF6 4040
UE6 2x 1/6 40098
Ck-µP(2,09 MHz)
UM8-4
06 562 414
A28 1/4 Ck decoder 525 kHz
A28 1/4 Ck decoder UP 131,25 kHz
UL5-2
Ck-RTC(32768 Hz)
06 562 414
BK-UP
UK5-2
06 562 414
A/D BUS
06.562 414
OSCILLATOR
Y2 = no connect. for CCIR version
A28 3/4
XAP1
WR
RD
Rem int sel
RST D
Rd RST D
POWER REGULATION
0V COMMON
CR12 BAT42
Q2 BCX55
Q3 5088
-Ext
-Batt
-10V
XA28/1P2
XA28/1P1
A28 1/4

PRODUCT: NAGRA IV–S Time Code / Code horaire **DATE:** June 1986

Nº 06-9

SUBJECT: Improvement of the CPU Reset when rapidly switching the main selector through STOP

Amélioration du déclanchement du Reset CPU lors d'un passage rapide par la position STOP

Required parts

– piggy–back circuit board P1366 (available on request)

Modification

– remove Time Code Circuits Block
– remove EPROM UR3
– place supplementary circuit P 1366 onto UR4 RAM,components side up.You may use thin double face adhesive tape
– solder white and red wires, as shown
– position black wire, preferably between UR4 and the EPROM connector (inside)
– plug in EPROM UR3
– solder black wire as shown
– solder grey wire to connector P2, pin 1B, as shown. Solder second grey wire with BAT 42 / CR12 diode as shown. See detail on next page.
– remove C8 capacitor (important)
– re–install Time Code Circuit Block

REMPLACES AND CANCELS 06-7 and 06-8
REMPLACE ET ANNULE 06-7 et 06-8

Matériel:

– Circuit piggy–back P1366 (livrable sur demande)

Modification

– enlever le bloc–circuits du code horaire
– enlever l'ERPOM UR3
– placer le circuit supplémentaire P1366 sur le RAM UR4, côté composants vers le haut. On peut utiliser de la bande autocollante double face mince
– souder les fils blanc et rouge, comme indiqué sur le schéma
– positionner le fil noir, de préférence entre UR4 et le connecteur d'EPROM (à l'intérieur)
– installer l'EPROM UR3
– souder le fil noir, comme sur le schéma
– souder un fil gris à la broche 1B du connecteur P2, comme indiqué sur le schéma. Souder le deuxième fil gris avec une diode BAT 42 / CR12 comme indiqué sur le dessin en page suivante
– enlever le condensateur C8 (important)
– re - installer le bloc-circuit du code horaire suivante.

PRINTED IN SWITZERLAND BY KUDELSKI SA

KUDELSKI SA 1033 CHESEAUX SWITZERLAND

NAGRA KUDELSKI

Phone: 021/91 21 21 Telex: 459 302
Telefax: 021/91 41 55

TO 1b OF P2

UN 3

UN 3

33

GREY

40

1

1

WHT

RED

R 34

J3

UR 3

BLACK

UR 4

P 1366

Reset

-10 V

0 V

-5 V TC

WHT

GRY

RED

BLK

R 32

R 33

UN 2

UP 2

UR 2

ST 3

C5

R 35

R 53

R 54

R 36

Q3

C8

C4

C8 must be removed

UN 1

UR 1

TO BAT42 / CR12

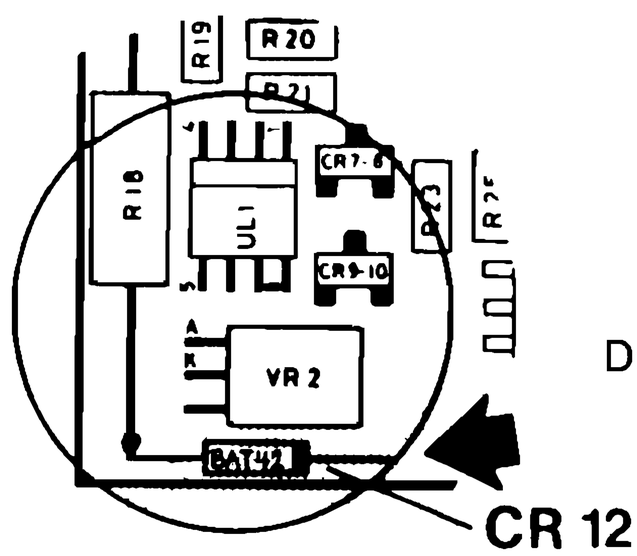

Detail of the connection

WIRING DETAIL OF P1366

910656 2000

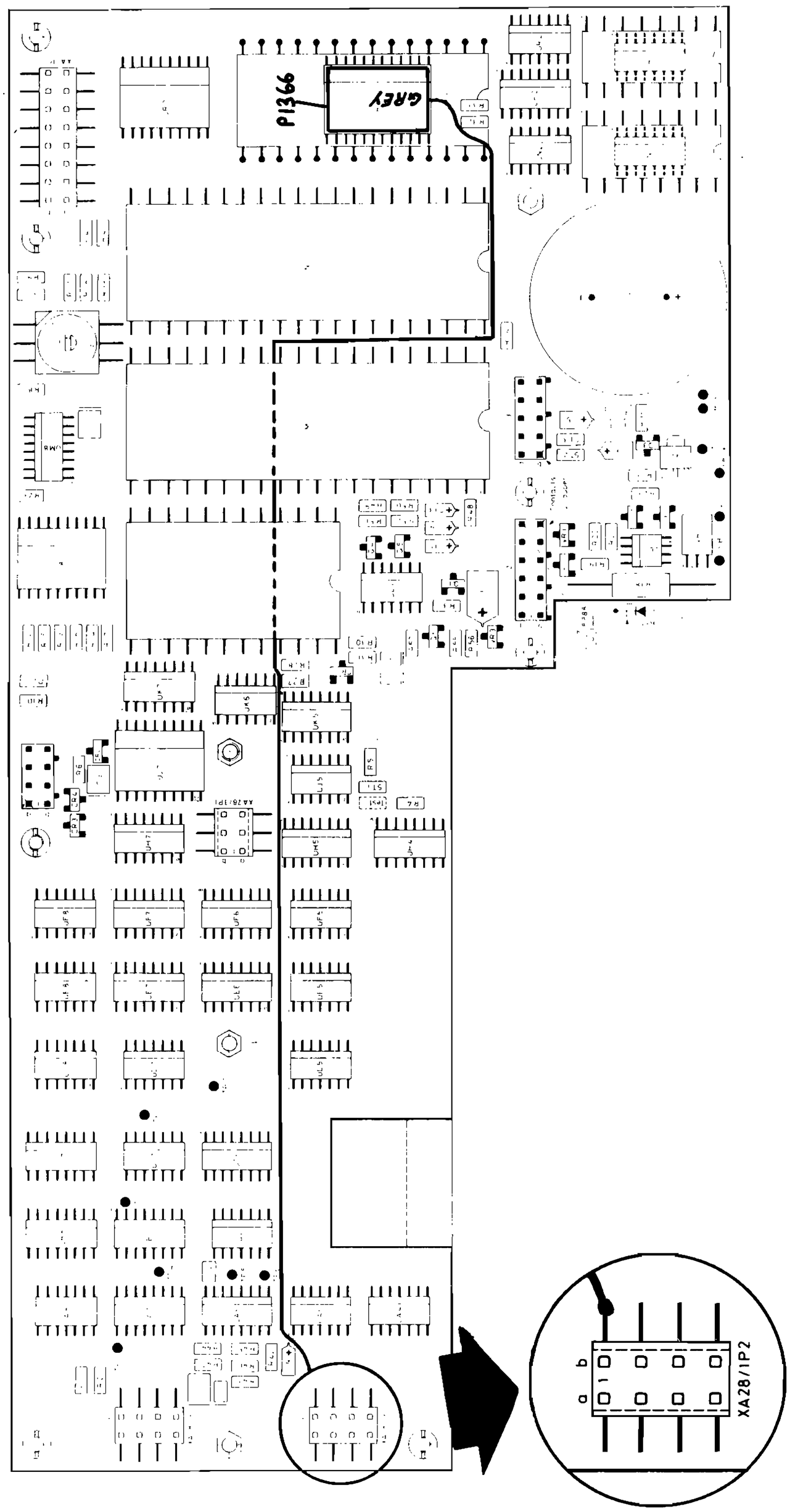

WIRING DETAIL OF P2

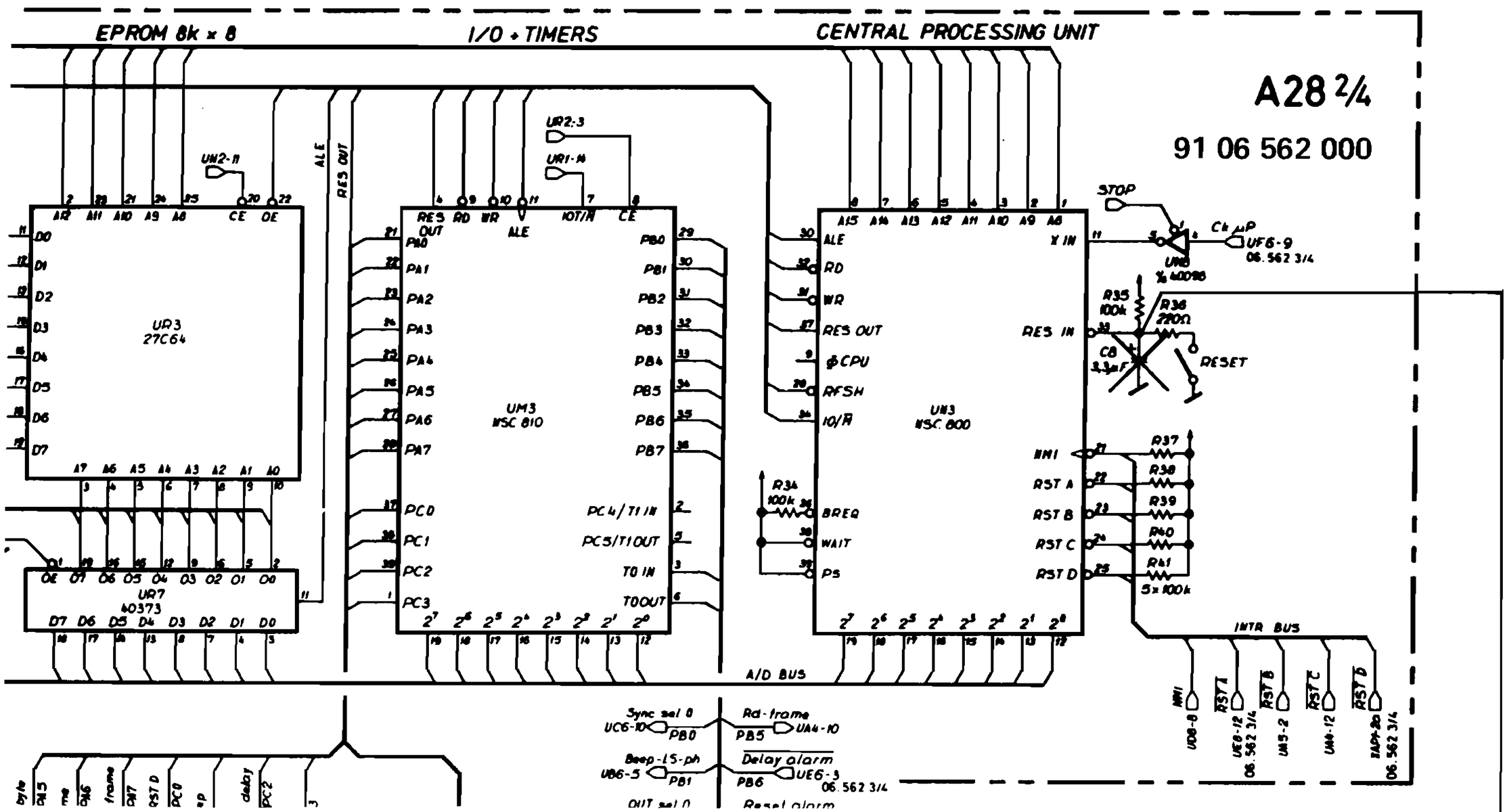

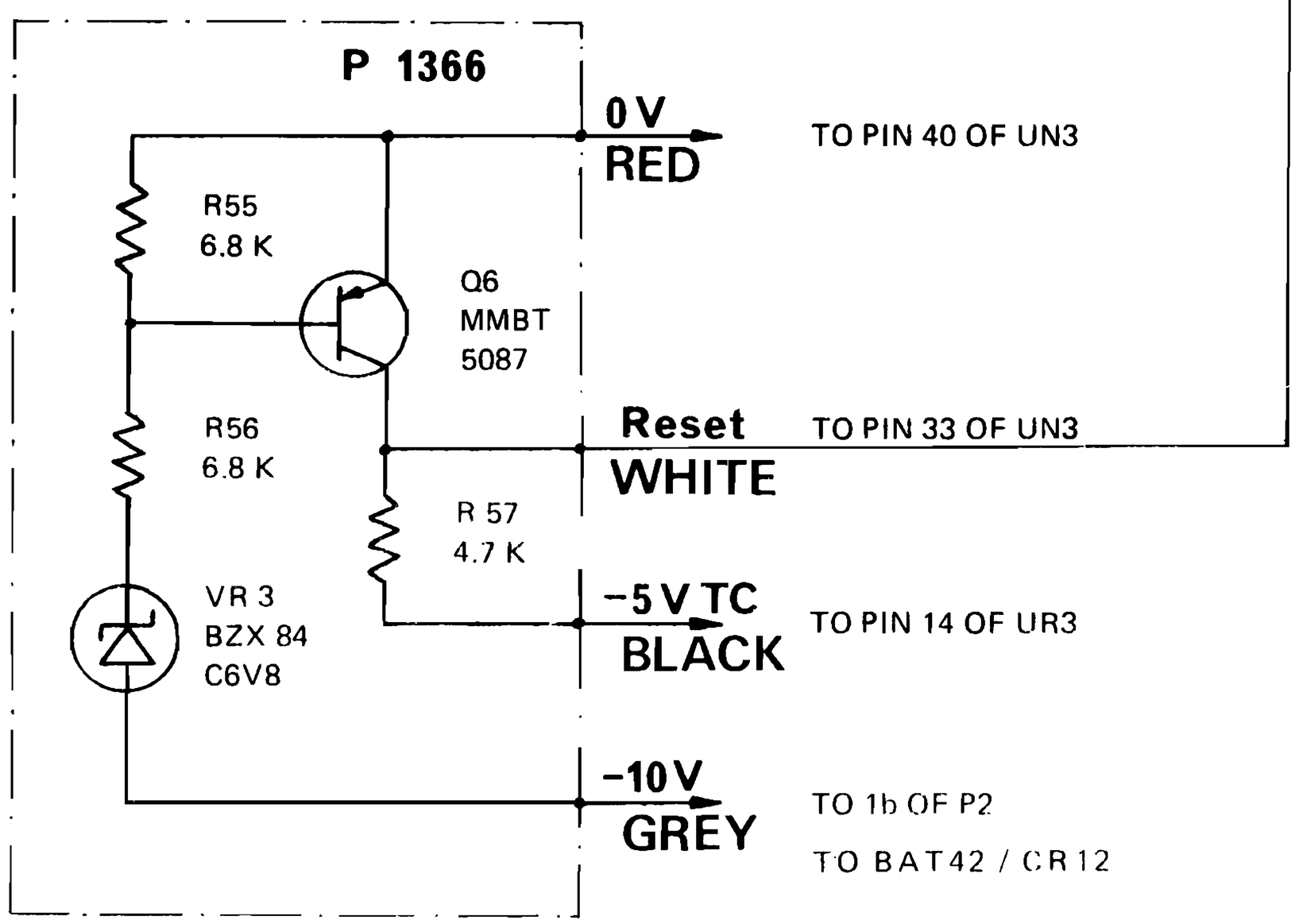

NOTES:

- C8 MUST BE REMOVED
- THIS TECHNICAL INFORMATION APPLIES TO ALL 91 06 562 000 BOARDS BEARING EITHER NO INDEX OR INDEX A

PRODUCT: Nagra IV-S TC DATE: June 1986

SUBJECT: **Erroneous Time Code operation when working off batteries or accumulators close to end of discharge.**

Défaut de fonctionnement du Time Code lorsque le IV–S est alimenté par piles ou par accumulateurs en fin de décharge.

Modification: A CR12 , BAT 42 , diode is to be added to the – 5V voltage stabilizer on main Time Code board 91 06 562 000 (schematic A28 2/4).

Solder this diode between R18/PIN4 of UL1, and –10V taken on the — of C25, on the 91 06 563 000 board

This diode, preassembled with a grey wire, is available under P/N 71 06 024 000.Solder the diode onto R18, and grey wire onto C25. Secure the diode with epoxy resin.

This diode BAT 42 / CR12 is also available together with P1366 piggy-back circuit. For more details, see on page 2.

Modification: Une diode CR12 , BAT 42 , est ajoutée au circuit du stabilisateur de tension – 5V sur le circuit de base Code Horaire 91 06 562 000 (schéma A28 2/4).

Souder la diode entre R18 – UL1 patte 4, et – 10V pris sur le – de C25 du circuit 91 06 563 000.

La diode prémontée avec un fil gris est disponiblesous le No 71 06 024 000. Souder la diode sur R18 et le fil gris sur C25. Fixer la diode avec de l'araldite.

La diode BAT42 / CR12 est aussi disponible avec le circuit piggy-back P1366. Pour plus de détails, voir en page 2.

CR 12 MOUNTING

(2 POSSIBILITIES)

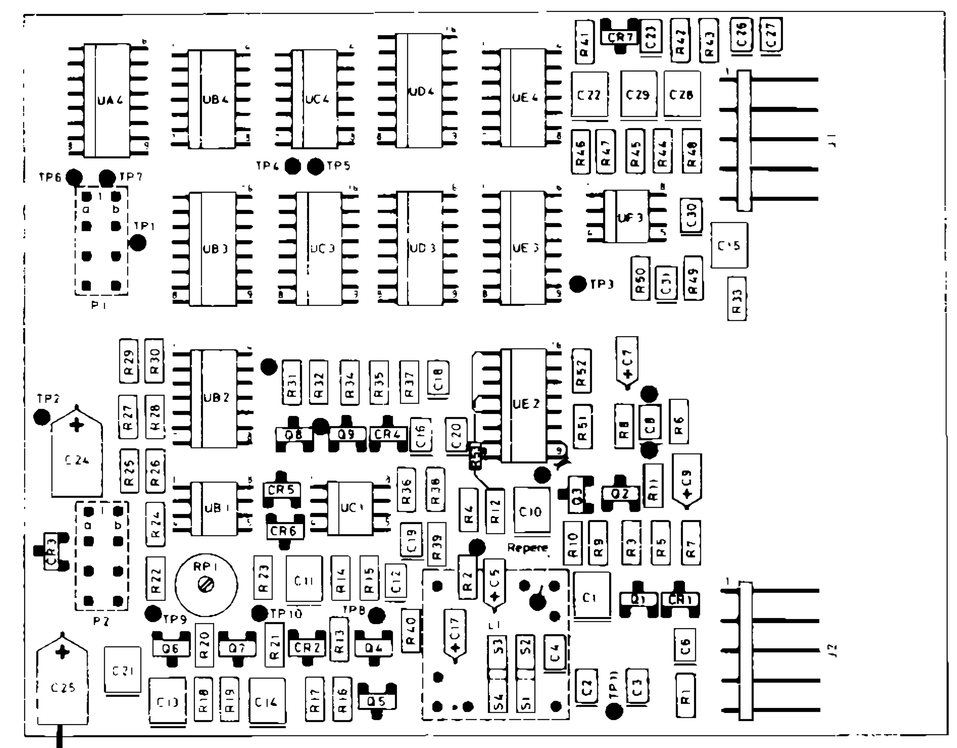

91 06 563 000

91 06 562 000

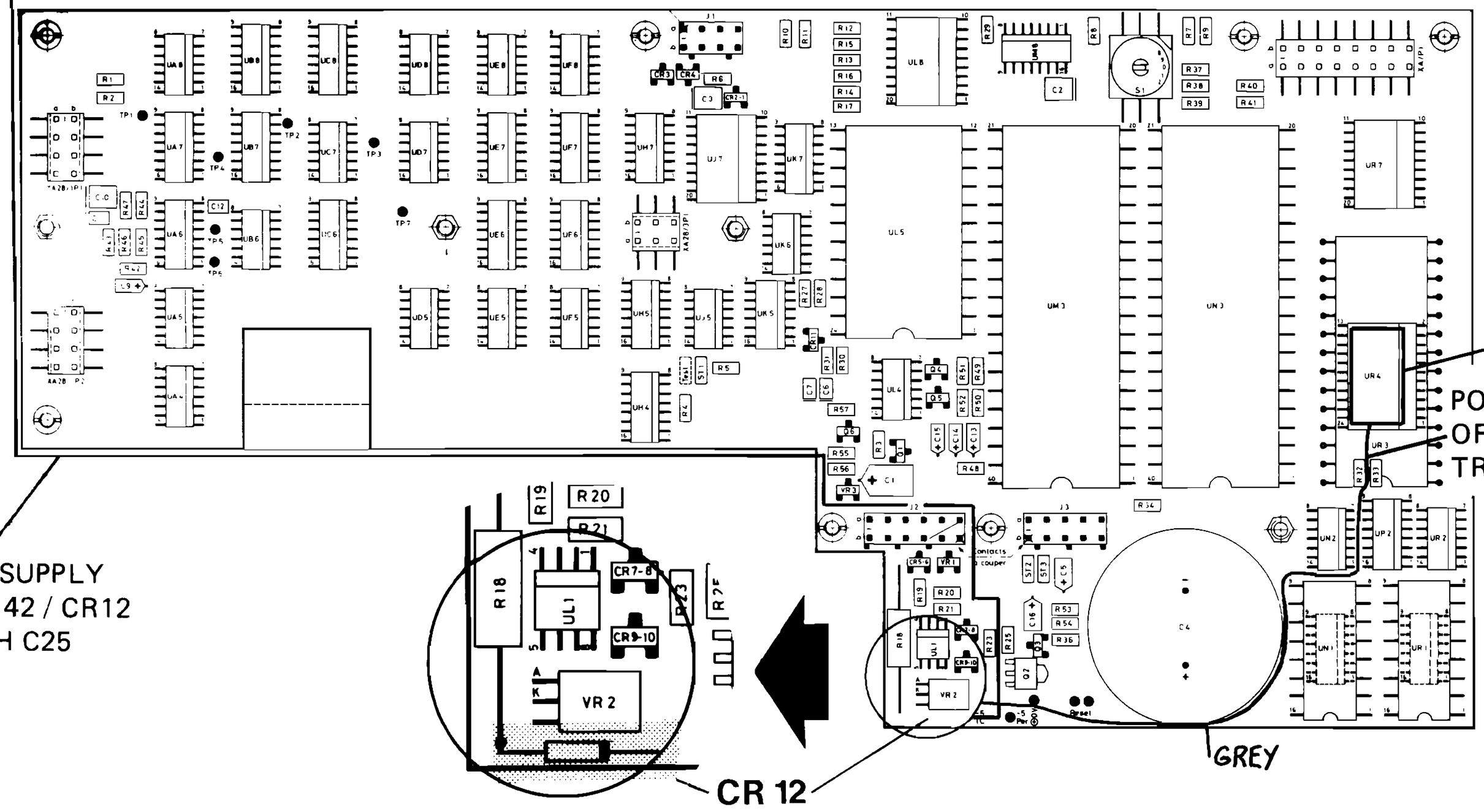

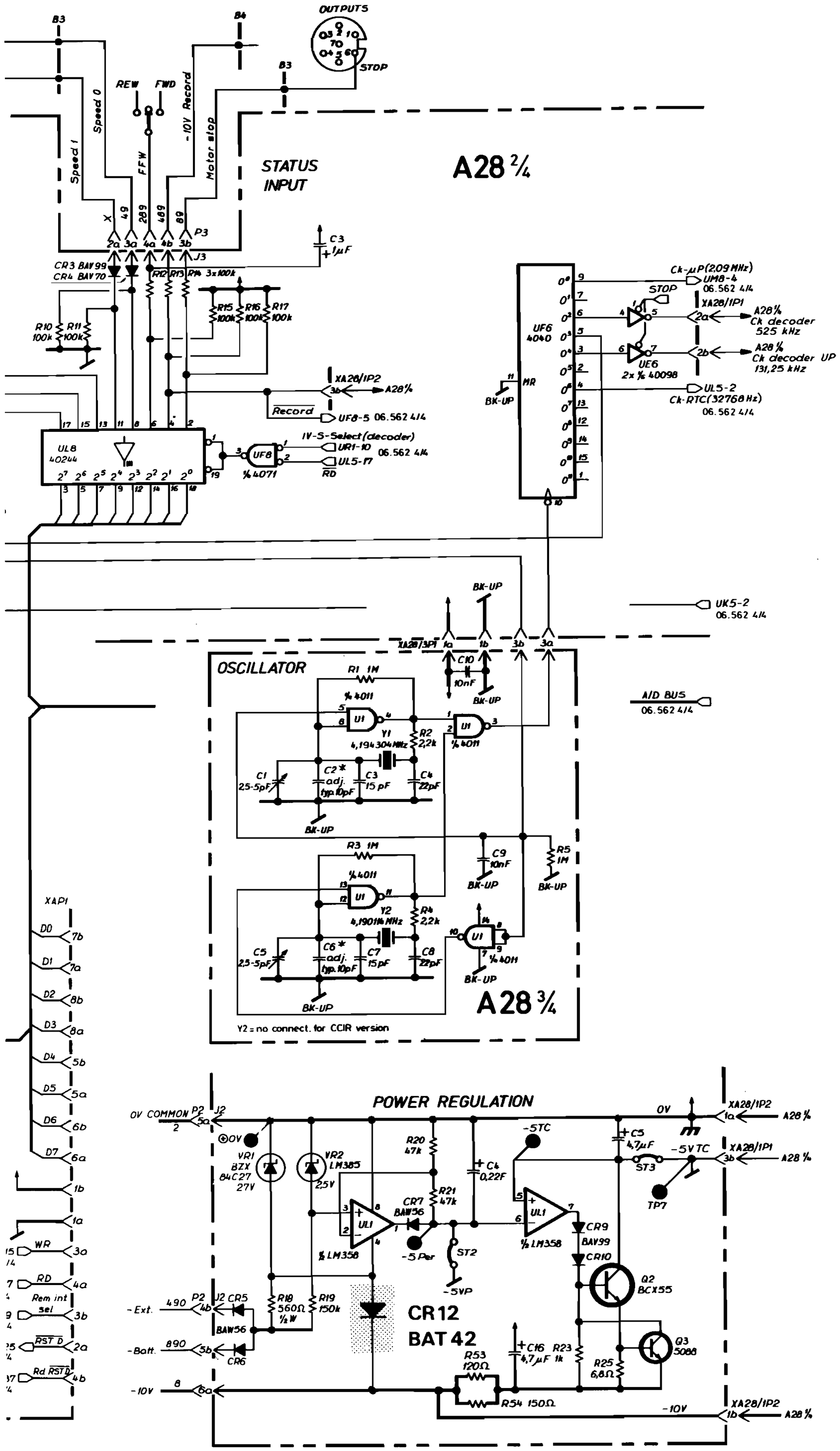
OUTPUTS
STOP
REW
FWD
Speed 0
Speed 1
FFW
-10V Record
Motor stop
STATUS INPUT
A28 2/4
CR3 BAV99
CR4 BAV70
C3 1µF
XA28/1P2
A28 1/4
Record
UF8-5 06.562 414
UL8 40244
UF8 1/4 4071
IV-S-Select (decoder)
UR1-10
UL5-17
RD
06.562 414
UF6 4040
MR
BK-UP
Ck-µP (2,09 MHz)
UM8-4
06.562 414
XA28/1P1
A28 1/4 Ck decoder 525 kHz
A28 1/4 Ck decoder UP 131,25 kHz
UE6 2x 1/6 40098
UL5-2
Ck-RTC (32768 Hz)
06.562 414
UK5-2
06.562 414
A/D BUS
06.562 414
OSCILLATOR
R1 1M
1/4 4011
Y1 4,194304 MHz
R2 2,2k
C1 25-5pF
C2* adj. typ. 10pF
C3 15 pF
C4 22pF
R3 1M
Y2 4,190114 MHz
R4 2,2k
C5 2,5-5pF
C6* adj. typ. 10pF
C7 15pF
C8 22pF
C9 10nF
R5 1M
C10 10nF
A28 3/4
Y2 = no connect. for CCIR version
XAP1
D0
D1
D2
D3
D4
D5
D6
D7
WR
RD
Rem int sel
RST D
Rd RST D
POWER REGULATION
0V COMMON
VR1 BZX 84C27 27V
VR2 LM385 2,5V
R20 47k
R21 47k
C4 0,22F
CR7 BAW56
½ LM358
-5 Per
ST2
-5VP
-5TC
C5 4,7µF
ST3
-5V TC
TP7
½ LM358
CR9 BAV99
CR10
Q2 BCX55
Q3 5088
CR12 BAT42
R18 560Ω ½W
R19 150k
-Ext.
-Batt.
-10V
CR5 BAW56
CR6
R53 120Ω
R54 150Ω
C16 4,7µF
R23 1k
R25 6,8Ω
XA28/1P2
XA28/1P1

PRODUCT: NAGRA IV–S Time Code

DATE: October 1986

Nº 06-10

SUBJECT: Inhibition of the time code recording
Suppression de l'enregistrement code horaire

In RECORD mode, time code recording is inhibited and only audio recording is permitted.
Lors d'un enregistrement, le code horaire est supprimé et seulement l'enregistrement audio est effectué.

MODIFICATIONS:

On the main TC board 91 06 562 000, disconnect WHT/GRY/YEL wire (–10V RECORD) from pin 4a of P1 connector plug (J1 connector socket close to R10 and R6). Protect disconnected end of the wire (pin) with insulating sleeve. It disables TC recording.

This wire could be cut and a miniature ON/OFF switch could be installed for easier and faster change from "TC recording" to "TC inhibited" mode.

When TC recording is inhibited, the LCD display is frozen when in record mode, but internal TC generator runs without interruptions.

MODIFICATIONS:

Sur la carte principale code horaire 91 06 562 000, déconnecter le fil BLANC/GRIS/JAUNE (–10V RECORD) de la pin 4a du connecteur P1 (prise J1 près de R10 et R6). Protéger le bout du fil déconnecté avec de la gaine isolante. L'enregistrement du signal code horaire est ainsi supprimé.

Ce fil peut être coupé et un mini interrupteur ON/OFF peut être installé. Il permet alors une commutation facile et rapide d'un enregistrement avec code horaire à un enregistrement sans code horaire.

Lorsque l'enregistrement du code horaire est supprimé, l'affichage LCD est "figé" mais le générateur interne tourne sans interruptions.

PRINTED WITZERLAND BY KUDELSKI SA

KUDELSKI SA 1033 CHESEAUX
SWITZERLAND

NAGRA KUDELSKI

Phone: 021/91 21 21 Telex: 459 302
Telefax: 021/91 41 55

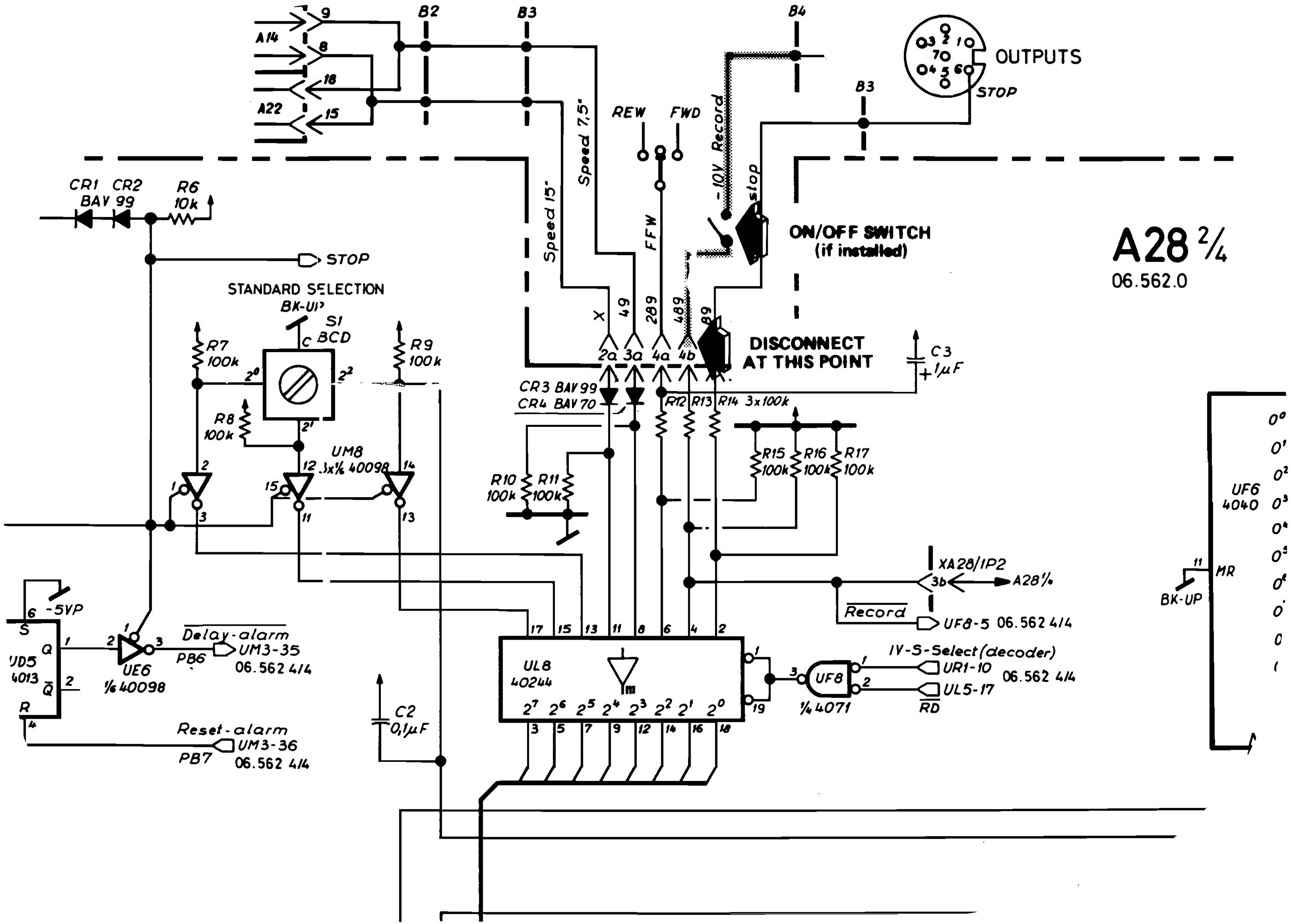
A28 2/4
06.562.0
A14
A22
B2
B3
B4
OUTPUTS
STOP
REW
FWD
Speed 7,5"
Speed 15"
FFW
-10V Record
stop
ON/OFF SWITCH
(if installed)
DISCONNECT
AT THIS POINT
C3
1µF
CR1 CR2
BAV 99
R6
10k
STOP
STANDARD SELECTION
BK-UP
S1
BCD
R7
100k
R8
100k
R9
100k
UM8
3x1/6 40098
CR3 BAV 99
CR4 BAV 70
R12 R13 R14 3x100k
R10
100k
R11
100k
R15
100k
R16
100k
R17
100k
UF6
4040
MR
BK-UP
XA28/1P2
A28 1/4
Record
UF8-5 06.562 414
IV-S-Select (decoder)
UR1-10
UL5-17
06.562 414
RD
UF8
1/4 4071
UL8
40244
C2
0,1µF
-5VP
UD5
4013
UE6
1/6 40098
Delay-alarm
PB6
UM3-35
06.562 414
Reset-alarm
PB7
UM3-36
06.562 414

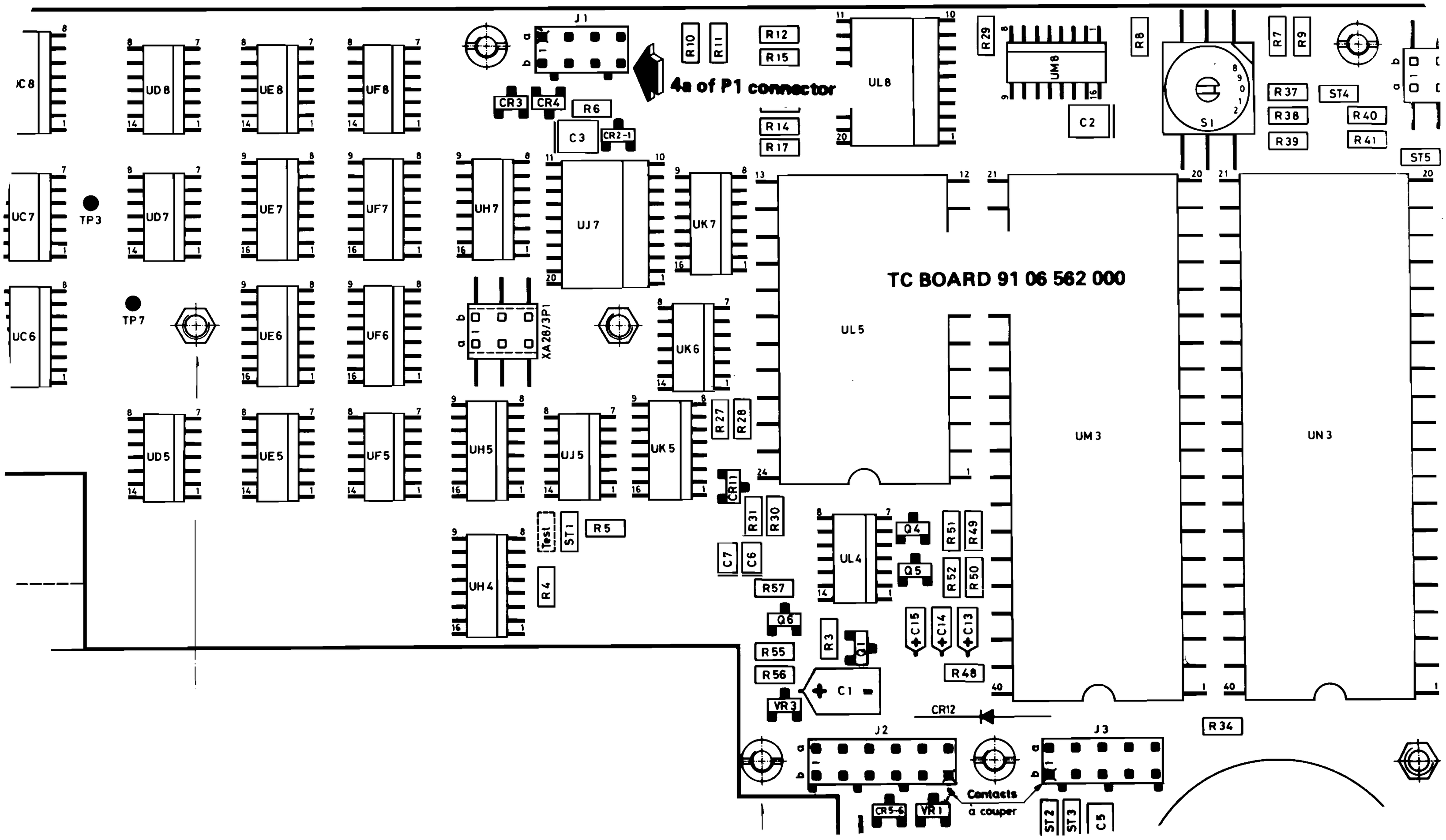

TC BOARD 91 06 562 000
4a of P1 connector
Contacts à couper
UC8
UD8
UE8
UF8
UC7
UD7
UE7
UF7
UH7
UJ7
UK7
UC6
UE6
UF6
UK6
UD5
UE5
UF5
UH5
UJ5
UK5
UH4
UL8
UL5
UL4
UM8
UM3
UN3
S1
J1
J2
J3
XA28/3P1
TP3
TP7
CR3
CR4
CR2-1
CR11
CR12
CR5-6
R6
C3
R10
R11
R12
R15
R14
R17
R29
R8
R7
R9
R37
R38
R39
R40
R41
ST4
ST5
C2
R27
R28
R31
R30
R5
R4
Test
ST1
C7
C6
R57
Q6
R55
R56
VR3
R3
Q1
C1
Q4
Q5
R51
R49
R52
R50
C15
C14
C13
R48
R34
VR1
ST2
ST3
C5

PRODUCT: NAGRA IV-S NAB

DATE: January 1988

SUBJECT: New calibration tapes

N° 06-11

7 Pages

Nagra IV-Stereo NAB version is Factory calibrated, since March 1987, for the following tapes:

Speed 15 ips Nagramaster	3M 226
Speeds 15 ips, 7.5 ips and 3.75 ips Standard	3M 808

The following instructions explain:
- how to modify the older machines (1975 - 1987) for the new calibration tapes
- how to modify the up-to-date machines for the following tapes: 3M 226, 3M 250, PEM 468

References:

- Nagra IV-S Service Manual	P/N 20.06004.253
- Recording Preampifier (A15), Parts List (pages 5,6,7)	P/N 91.06811.100
- Spare Parts List	P/N 20.00932.391

1) MODIFICATIONS FOR 3M808 AND 3M226 TAPES

The Nagra IV-S NAB machines, manufactured between 1975 and March 1987, were calibrated for the tapes: 3M250 (15 ips Master) and 3M206 (remaining speeds).

To recalibrate these machines for 3M808 and 3M226 tapes, modify the A15 Recording Preamplifier and proceed with the recording chain calibration.

1.1) Modifications of the Recording Preamplifier A15 P/N 91.06811.100

1.1.1) Replace twe following components. List of the new values is given.

R1 and R101	55.26013.335	Resistor	3.3 MΩ	10%	¼W	(old 1.5 MΩ)
R2 and R102	55.42183.422	Resistor	220 kΩ	2%	¼W	(old 270 kΩ)
R3 and R103	55.42183.415	Resistor	150 kΩ	2%	¼W	(old - none)
R4 and R104	55.42183.447	Resistor	470 kΩ	2%	¼W	(old 1 MΩ)
R7 and R107	55.42183.422	Resistor	220 kΩ	2%	¼W	(old 270 kΩ)
R8 and R108	55.42183.510	Resistor	1 MΩ	2%	¼W	(old - none)
R9 and R109	55.42183.422	Resistor	220 kΩ	2%	¼W	(old 270 kΩ)
R10 and R110	55.42183.322	Resistor	22 kΩ	2%	¼W	(old 8.2 kΩ)
C1 and C101	53.50111.254	Cer. capacitor	120 pF	10%		(old - none)
C2 and C102	53.50111.254	Cer. capacitor	120 pF	10%		(old - none)
C5 and C105	53.50111.054	Cer. capacitor	100 pF	10%		(old 220 pF)
C6 and C106	53.12267.147	Pol. capacitor	470 pF	10%		(old 680 pF)

PRINTED IN SWITZERLAND BY KUDELSKI SA

KUDELSKI SA 1033 CHESEAUX SWITZERLAND

NAGRA KUDELSKI

Tel. 021 / 731 21 21
Telefax 021 / 731 41 55
Telex 459 302 nagr ch

1.1.2) Mount new components:

R55 and R155 55.27182.333 Resistor 33 kΩ 2% 1/8W
C19 and C119 53.50114.752 Cer. capacitor 470 pF 10%

Undo the components: C12, C110, R27, R127.
Replace R27 and R127 resistors with 1/8W resistors of the same value: 55.27182.333 Resistor 33kΩ 2% 1/8W
Mount in parallel with R27, as shown on the sketch, the new components R55 and C19 wired in series and protected with insulating sleeve d=3/16" (P/N 42.27500.300).
Repeat the above with R127, R155 and C119.
Mount the above components and the C12 and C110 capacitors onto the circuit board - observe the polarity of these tantalum capacitors.

Details of C19 and R55 mounting

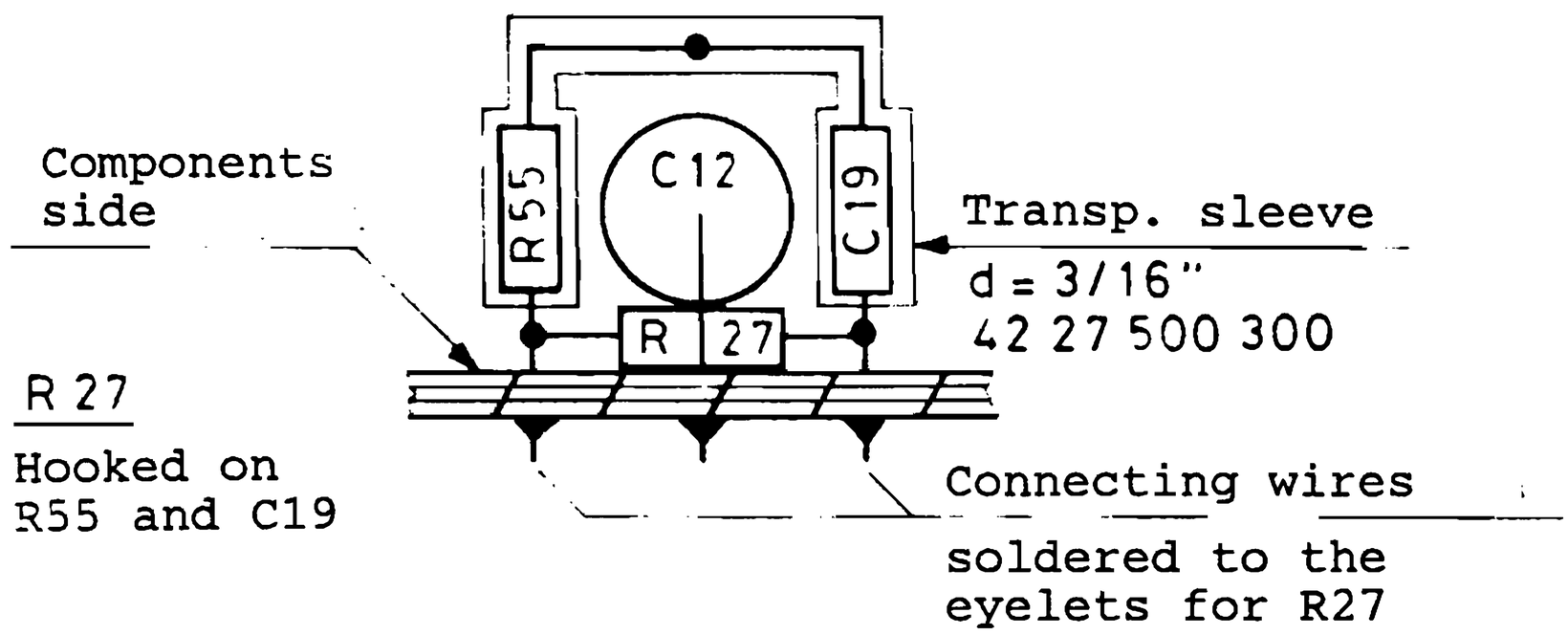

Details of C119 and R155 mounting

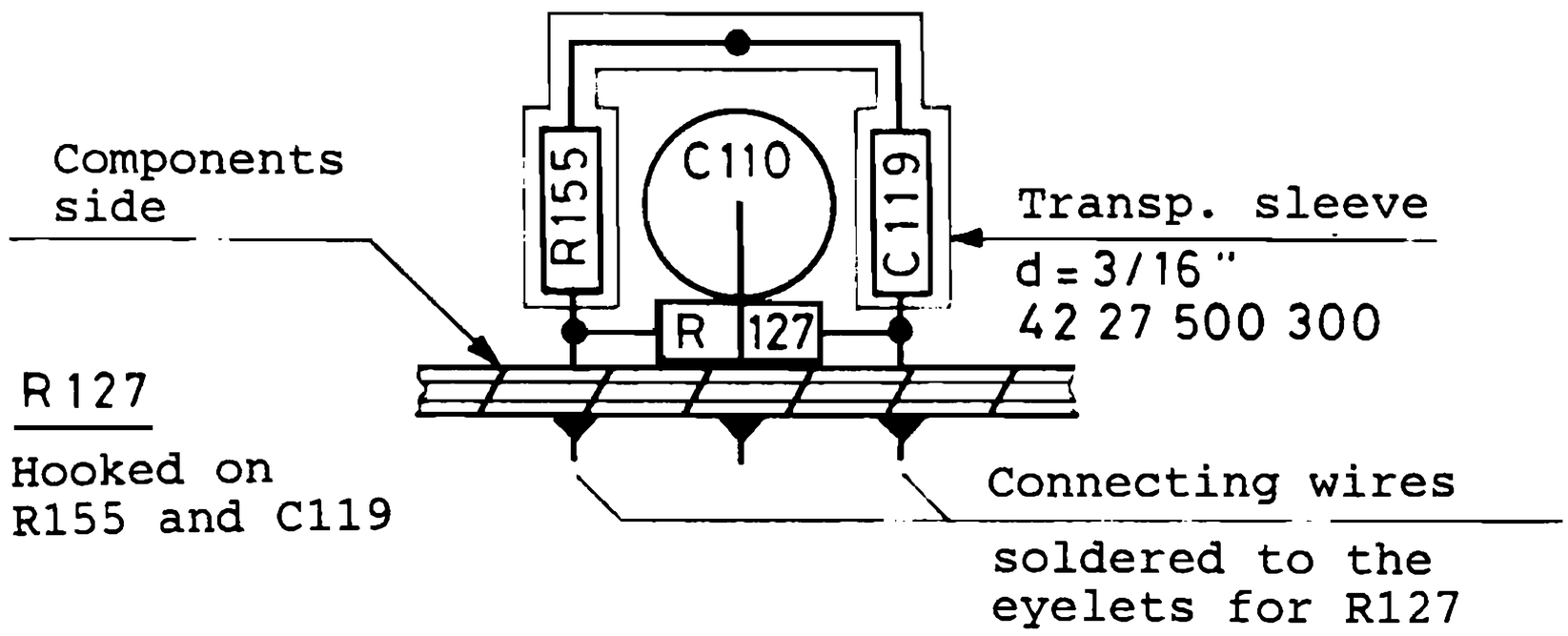

1.2) Calibration of the recording chain

Follow the calibration procedure, as explained in the Service Manual, with the exception of bias voltage setting.

Bias adjustment:

- Speed 15 ips Standard (load 3M808 tape)
- Input signal 15 kHz at -10 dB (modulometer)
- Overbias to -2 dB (level drop on the line output)

2) MODIFICATIONS FOR 3M226, 3M250 AND PEM468 TAPES

The recent Nagra IV-S NAB machines, manufactured since March 1987, are calibrated for the tapes: 3M226 (15 ips Master) and 3M808 (remaining speeds).

To recalibrate these machines for 3M226, 3M250 or PEM468 tapes, modify the A15 Recording Preamplifier and proceed the recording chain calibration.

2.1) Modifications of the Recording Preamplifier
A15 P/N 91.06811.100

Replace the following components. List of the new values is given.

R1 and R101	None		(old 3.3 MΩ)
R2 and R102	55.42183.427	Resistor 270 kΩ 2% ¼W	(old 220 kΩ)
R4 and R104	None		(old 470 kΩ)
R5 and R105	55.42183.427	Resistor 270 kΩ 2% ¼W	(old 220 kΩ)
R6 and R106	55.42183.439	Resistor 390 kΩ 2% ¼W	(old 1.5 MΩ)
R7 and R107	55.26013.335	Resistor 3.3 MΩ 10% ¼W	(old 220 kΩ)
R9 and R109	55.42183.439	Resistor 390 kΩ 2% ¼W	(old 220 kΩ)
R10 and R110	55.42183.312	Resistor 12 kΩ 2% ¼W	(old 22 kΩ)

For the tapes 3M226 and PEM468 :

R25 and R125	55.42183.322	Resistor 22 kΩ 2% ¼W	(old 15 kΩ)
R26 and R126	55.42183.233	Resistor 3.3 kΩ 2% ¼W	(old 2.2 kΩ)
R27 and R127	55.27182.393	Resistor 39 kΩ 2% 1/8W	(old 33 kΩ)
C19 and C119	53.50111.854	Cer. capacitor 180 pF 10%	(old 470 pF)

N o t e :

C19 capacitor is mounted in series with R55 resistor, and both are mounted in parallel with R27 resistor. Installation details of these components are explained on page 2.

The same applies to the C119, R155 and R127.

For the tape 3M250 :

C19 and C119 53.50111.854 Cer. capacitor 180 pF 10% (old 470 pF)

N o t e :
C19 capacitor is mounted in series with R55 resistor, and both are mounted in parallel with R27 resistor. Installation details of these components are explained on page 2.
The same applies to the C119, R155 and R127.

2.2) Calibration of the recording chain

Follow the calibration procedure, as explained in the Service Manual, with the exception of bias voltage setting.

Bias adjustment:

- Speed 15 ips Standard (load choosen tape)
- Input signal 1 kHz at -10 dB (modulometer)
- Bias voltage $V(bias) = K \cdot \sqrt{V(B1) \cdot V(B2)}$
  where: K = 1.1 (for 3M226 and PEM468 tapes)
  K = 1.05 (for 3M250 tape)

Bias voltages:

Tape	3M226	V(bias) ≈ 9.9 V	Bias setting switch pos. 4
Tape	3M250		Bias setting switch pos. 4
Tape	PEM468	V(bias) ≈ 11.5 V	Bias setting switch pos. 5

Maximum Peak Level

MPL = + 4 dB

REPERE		CODE	Nb. total		DESIGNATION	TYPE/MARQUE	OBSERVATION
	C1	53 50 111 254	4	1	C CER T 120pF 10%	100V CA	
	C2	53 50 111 254	-	1	C CER T 120pF 10%	100V CA	
	C3	53 12 267 210	2	1	C PER 1nF 10% 200V		
	C4	53 12 267 147	4	1	C PER 470pF 10% 200V		
	C5	53 50 111 054	4	1	C CER 100pF 10% 100V	TUB CA	
	C6	53 12 267 147	-	1	C PER 470pF 10% 200V		
	C7	52 12 041 050	2	1	C TA 1uF 20% 35VA		
	C8	53 50 111 054	-	5	C CER 100pF 10% 100V	TUB	
	C9	53 12 267 315	2	1	C PER 15nF 10% 200V		
	C10	52 12 014 700	2	1	C TA 47uF 20% 6VB		
	C11	52 12 024 750	5	1	C TA 4,7uF 20% 10VA		
	C12	53 12 266 410	4	1	C PER 0,1uF 10% 80V		
	C13	52 12 041 060	2	1	C TA 0,1uF 20% 35VA		
	C14	53 50 111 554	2	5	C CER 150pF 10% 100V	TUB	
	C15	53 12 266 333	4	1	C PER 33nF 10% 80V		
	C16	53 12 266 333	-	1	C PER 33nF 10% 80V		
	C17	52 12 024 750	-	1	C TA 4,7uF 20% 10VA		
	C18	53 12 266 410	-	1	C PER 0,1uF 10% 80V		
	C19	53 50 114 752	2	1	C CER T 470pF 10%	50V CA	
	C101	53 50 111 254	-	1	C CER T 120pF 10%	100V CA	
	C102	53 50 111 254	-	1	C CER T 120pF 10%	100V CA	
	C103	53 12 267 210	-	1	C PER 1nF 10% 200V		
	C104	53 12 267 147	-	1	C PER 470pF 10% 200V		
	C105	53 50 111 054	-	5	C CER 100pF 10% 100V	TUB CA	
	C106	53 12 267 147	-	1	C PER 470pF 10% 200V		
	C107	52 12 041 050	-	1	C TA 1uF 20% 35VA		
	C108	53 50 111 054	-	5	C CER 100pF 10% 100V	TUB	
	C109	53 12 267 315	-	1	C PER 15nF 10% 200V		
	C110	52 12 014 700	-	1	C TA 47uF 20% 6VB		
	C111	52 12 024 750	-	1	C TA 4,7uF 20% 10VA		
	C112	53 12 266 410	-	1	C PER 0,1uF 10% 80V		
	C113	52 12 041 060	-	1	C TA 0,1uF 20% 35VA		
	C114	53 50 111 554	-	5	C CER 150pF 10% 100V	TUB	
	C115	53 12 266 333	-	1	C PER 33nF 10% 80V		
	C116	53 12 266 333	-	1	C PER 33nF 10% 80V		
	C117	52 12 024 750	-	1	C TA 4,7uF 20% 10VA		
	C118	53 12 266 410	-	1	C PER 0,1uF 10% 80V		

KUDELSKI SA

LISTE DE PIECES ELECTRONIQUES	MODIFICATION Repère(s): [illegible]	Execute par: JF/ef	Date 5.4.74 / Visa
	Date: [illegible] 24.05.81 / Visa: KR		
	Remplace: OHE 06-022	Feuille No: 4 (8) R	
CC AMPLI D'ENREGISTREMENT NAB		91 06 811 100	

REPERE		CODE	Nb. total		DESIGNATION	TYPE/MARQUE	OBSERVATION
	C119	53 50 114 752	-	1	C CER T 470pF 10%	50V CA	
	C201	52 12 024 750	-	1	C TA 4,7uF 20%	10V A	
	R1	55 26 013 335	2	1	R CAR 3,3M 10% ¼W	CB A-B	
	R2	55 42 183 422	8	1	R COM 220K 2% ¼W	100ppm	
	R3	55 42 183 415	6	1	R COM 150K 2% ¼W	100ppm	
	R4	55 42 183 447	2	1	R COM 470K 2% ¼W	100ppm	
	R5	55 42 183 422	2	1	R COM 220K 2% ¼W	100ppm	
	R6	55 26 013 155	2	1	R CAR 1,5M 10% ¼W	CB A-B	
	R7	55 42 183 422	-	1	R COM 220K 2% ¼W	100ppm	
	R8	55 42 183 510	2	1	R COM 1M 2% ¼W	100ppm	
	R9	55 42 183 422	-	1	R COM 220K 2% ¼W	100ppm	
	R10	55 42 183 322	2	1	R COM 22K 2% ¼W	100ppm	
	R11	55 26 013 332	2	1	R CAR 3,3K 10% ¼W	CB A-B	
	R12	55 26 013 562	4	1	R CAR 5,6K 10% ¼W	CB A-B	
	R13	55 26 013 562	-	1	R CAR 5,6K 10% ¼W	CB A-B	
	R14	55 26 013 472	2	1	R CAR 4,7K 10% ¼W	CB A-B	
	R15	56 34 001 322	8	1	R POT 22K 20% TRIM	90H A-B	
	R16	56 34 001 322	-	1	R POT 22K 20% TRIM	90H A-B	
	R17	56 34 001 322	-	1	R POT 22K 20% TRIM	90H A-B	
	R18	56 34 001 322	-	1	R POT 22K 20% TRIM	90H A-B	
	R19	55 26 013 104	5	1	R CAR 100K 10% ¼W	CB A-B	
	R20	55 42 183 333	2	1	R COM 33K 2% ¼W	100ppm	max. ± 5%
	R21	55 42 183 118	2	1	R COM 180E 2% ¼W	100ppm	
	R22	55 42 183 215	2	1	R COM 1,5K 2% ¼W	100ppm	max. ± 5%
	R23	55 42 183 347	14	1	R COM 47K 2% ¼W	100ppm	
	R24	55 42 183 347	-	1	R COM 47K 2% ¼W	100ppm	
	R25	55 42 183 315	2	1	R COM 15K 2% ¼W	100ppm	max. ± 5%
	R26	55 42 183 222	2	1	R COM 2,2K 2% ¼W	100ppm	
	R27	55 27 182 333	4	1	R COM 33K 2% 1/8W	200ppm	
	R28	55 26 013 104	-	1	R CAR 100K 10% ¼W	CB A-B	

KUDELSKI SA

LISTE DE PIECES ELECTRONIQUES	MODIFICATION Repère(s): R20, R27	Executé par: JF/ef	Date 17.2.75	Visa
	Date: 15.04.87 Visa: KR			
	Remplace: UMF 06-022	Feuille N°: 5 (8) R		
CC AMPLI D'ENREGISTREMENT NAB		91 06 811 100		

REPERE		CODE	Nb. total		DESIGNATION	TYPE/MARQUE	OBSERVATION
	R29	55 26 013 334	2	1	R CAR 330K 10% ¼W	CB A-B	
	R30	55 42 183 410	4	1	R COM 100K 2% ¼W	100ppm	
	R31	55 26 013 224	2	1	R CAR 220K 10% ¼W	CB A-B	
	R32	55 42 183 415	-	1	R COM 150K 2% ¼W	100ppm	
	R33	55 42 183 347	-	1	R COM 47K 2% ¼W	100ppm	
	R34	55 42 183 327	8	1	R COM 27K 2% ¼W	100ppm	
	R35	55 42 183 227	2	1	R COM 2,7K 2% ¼W	100ppm	
	R36	55 42 183 327	-	1	R COM 27K 2% ¼W	100ppm	
	R37	55 42 183 415	-	1	R COM 150K 2% ¼W	100ppm	
	R38	55 42 183 347	-	1	R COM 47K 2% ¼W	100ppm	
	R39	55 26 013 274	2	1	R CAR 270K 10% ¼W	CB A-B	
	R40	55 42 183 427	4	1	R COM 270K 2% ¼W	100ppm	max. ± 5%
	R41	55 42 183 427	-	1	R COM 270K 2% ¼W	100ppm	max. ± 5%
	R42	55 26 013 102	2	1	R CAR 1K 10% ¼W	CB A-B	
	R43	55 26 013 225	2	1	R CAR 2,2M 10% ¼W	CB A-B	
	R44	55 26 013 272	2	1	R CAR 2,7K 10% ¼W	CB A-B	
	R45		1		R CAR 10% ¼W	CB A-B	ajuster
	R46	55 42 183 410	-	1	R COM 100K 2% ¼W	100ppm	
	R47	55 42 183 318	2	1	R COM 18K 2% ¼W	100ppm	
	R48	55 42 183 347	-	1	R COM 47K 2% ¼W	100ppm	
	R49	55 42 183 347	-	1	R COM 47K 2% ¼W	100ppm	
	R50	55 26 013 103	3	1	R CAR 10K 10% ¼W	CB A-B	
	R51	55 42 183 347	-	1	R COM 47K 2% ¼W	100ppm	
	R52	55 42 183 327	-	1	R COM 27K 2% ¼W	100ppm	
	R53	55 42 183 327	-	1	R COM 27K 2% ¼W	100ppm	
	R54	56 37 320 210	2	5	R TRIM 1K 10% ½W	V	
	R55	55 27 182 333	-	1	R COM 33K 2% 1/8W	200ppm	

KUDELSKI SA

LISTE DE PIECES ELECTRONIQUES	MODIFICATION Repère(s): R55	Execute par:	Date	Visa
	Date: 15.04.87 Visa: KR	ur/ef	8.4.74	
	Remplace: OHE 06-022	Feuille No: 6 (8) R		
CC AMPLI D'ENREGISTREMENT NAB		91 06 811 100		

PRODUCT: NAGRA IV-S CCIR DATE: March 1988

Nº 06-12

SUBJECT: Recording Amplifier (A15), correction of gain adjustment range

1 Page

New calibration tapes, actually used with NAGRA IV-S CCIR machine, require modification of the recording amplifier in order to assure necessary range of the gain adjustment and to enable 3rd harmonic distortion level setting at the minimum.

Without modification, the end stop of the gain adjustment potentiometer might be reached before the correct adjustments could be done. This leaves higher 3rd harmonic distortion level.

Calibration tapes :

Speed 7.5 ips, 15 ips STD, 15 ips MASTER	PEM 468
Speed 3.75 ips	PEM 369

Bias : Coefficient K = 1.05

M.P.L. : + 4 dB

M O D I F I C A T I O N

Recording Amplifier A15 P/N 91 06812 100

Replace the following components. List of the new values is given.

R1	and R101	55 26013 155	Resistor	1.5 mΩ	10%	1/8W	(old 1.0 MΩ)
R2	and R102	55 42183 422	Resistor	220 kΩ	2%	¼W	(old 180 kΩ)
R4	and R104	55 26013 225	Resistor	2.2 MΩ	10%	1/8W	(old 1.0 MΩ)
R5	and R105	55 42183 422	Resistor	220 kΩ	2%	¼W	(old 180 kΩ)
R6	and R106	55 26013 475	Resistor	4.7 MΩ	10%	1/8W	(old 1.5 MΩ)
R7	and R107	55 42183 427	Resistor	270 kΩ	2%	¼W	(old 220 kΩ)
R9	and R109	55 42183 427	Resistor	270 kΩ	2%	¼W	(old 220 kΩ)
R10	and R110	55 42183 347	Resistor	47 kΩ	2%	¼W	(old 15 kΩ)

PRINTED IN SWITZERLAND BY KUDELSKI SA

KUDELSKI SA 1033 CHESEAUX
SWITZERLAND

NAGRA KUDELSKI

Tel. 021 / 731 21 21
Telefax 021 / 731 41 55
Telex 459 302 nagr ch

CHAPTER VII "SCHEMATICS"

TABLE OF CONTENTS

1.1 P.C. boards part numbers

1.2 P.C. boards location

1.3 Schematics

1.4 Interconnection

1.5 Synoptic diagrams

1.1 P.C. BOARDS PART NUMBERS

Board	Board name	Boards part number
A1-2-3	MICROPHONE PREAMPLIFIER	91 06 720 000
A4-5-6	DIRECT AMPLIFIER & REFERENCE OSCILLATOR (SINE WAVE VERSION)	91 06 730 000
A7-8	MODULOMETER & DIFFERENTIAL INDICATOR	91 06 740 000
A8-9	VU INDICATOR (OPTIONAL)	91 06 744 000
A9	PHONES SWITCHING & LEVEL CONTROL	91 06 710 100
A-10	LINES & PHONES AMPLIFIERS	91 06 745 000
A11	L.S. AMPLIFIER	91 06 750 000
A12	MICROPHONE POWER SUPPLY	91 06 760 100
A14	PLAYBACK AMPLIFIER	91 06 805 000
A15	RECORDING PREAMPLIFIER WITH CONTROLLED PRE-EMPHASIS	91 06 811 100 (NAB) 91 06 812 100 (CCIR)
A16	RECORDING AMPLIFIER & BIAS OSCILLATOR	91 06 813 000 (Non-pilot, wide tracks) 91 06 814 000 (Pilot, narrow tracks)
A22	VOLTAGE & SPEED STABILIZER	91 04 765 100
A23	METER SWITCHING & LIGHT TEMPORIZER	91 06 765 000
A24	PILOT WITH 0 V DC INPUT & OUTPUT	91 06 774 000
A25	FREQUENCY METER	70 06 780 000 (50 Hz) 70 06 781 000 (60 Hz)
A26 A	CRYSTAL GENERATOR	91 06 698 000
A26 B	CRYSTAL GENERATOR	91 06 697 000
A28 1/4	TIME CODE PLAYBACK AMPLIFIER	91 06 563 000
A28 2/4	TIME CODE MAIN CIRCUIT	91 06 562 000
A28 3/4	TIME CODE CRYSTAL CIRCUIT	91 06 564 000
A28 4/4	TIME CODE KEYBOARD AND DISPLAY	91 06 561 100
A29	QSIA - AATON TC . SERIAL INTERFACE	70 06 570 000
B1	BOX INTERCONNECTION	91 06 700 000
B2	TAPE DECK BOX INTERCONNECTION	91 06 800 000
B3	BATTERY BOX INTERCONNECTION (LEFT)	91 06 770 100
B4	BATTERY BOX INTERCONNECTION (RIGHT)	91 06 771 100

1.2 P.C. BOARDS LOCATION

E1-S	Circuit location- Box (Time code or pilot version)
E2-S	Circuit location Tape deck

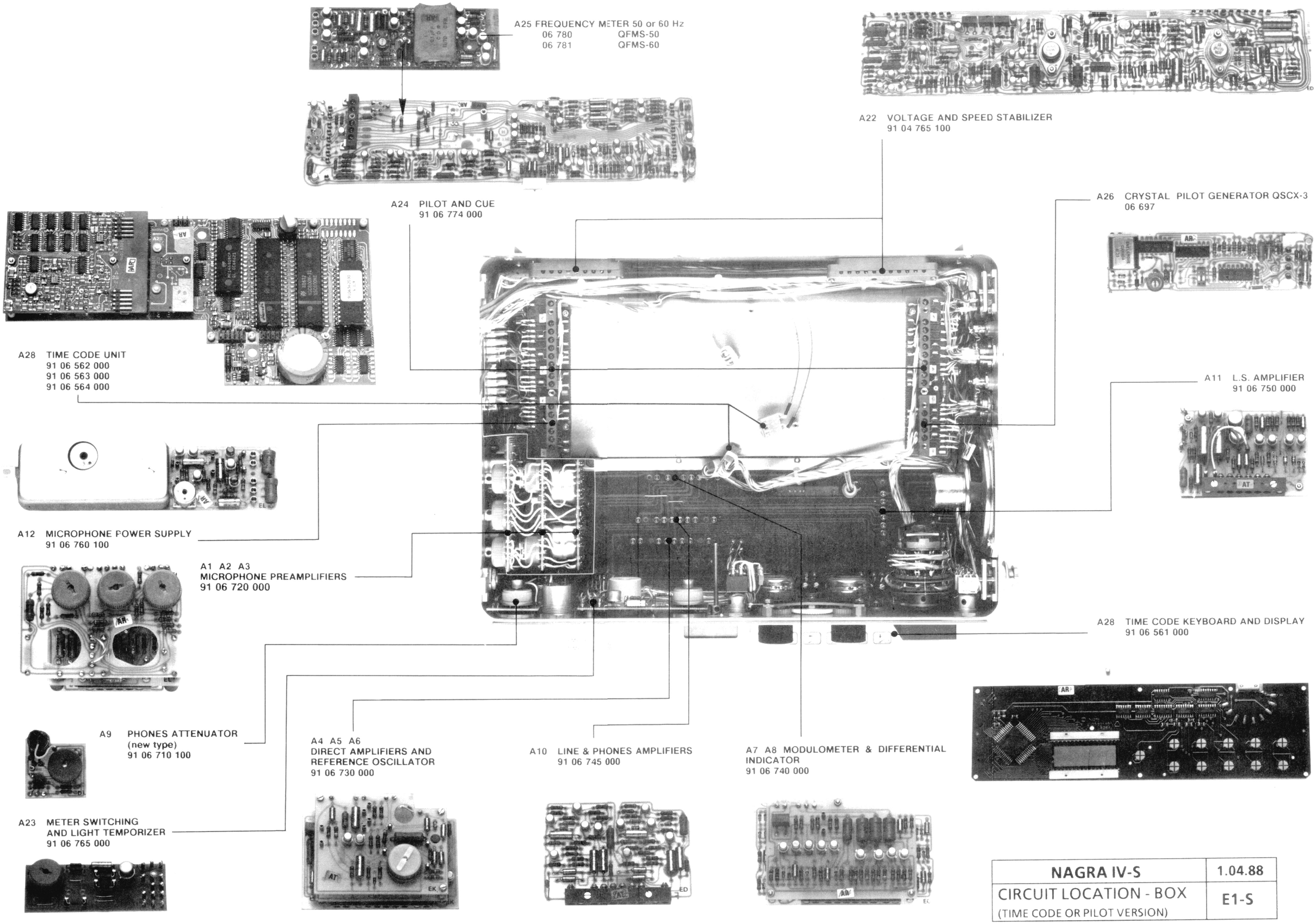

NAGRA IV-S	1.04.88
CIRCUIT LOCATION - BOX (TIME CODE OR PILOT VERSION)	E1-S

A15

RECORDING AMPLIFIER
91 06 811 100 (NAB)
91 06 812 100 (CCIR)

A14

PLAYBACK AMPLIFIER
91 06 805 000

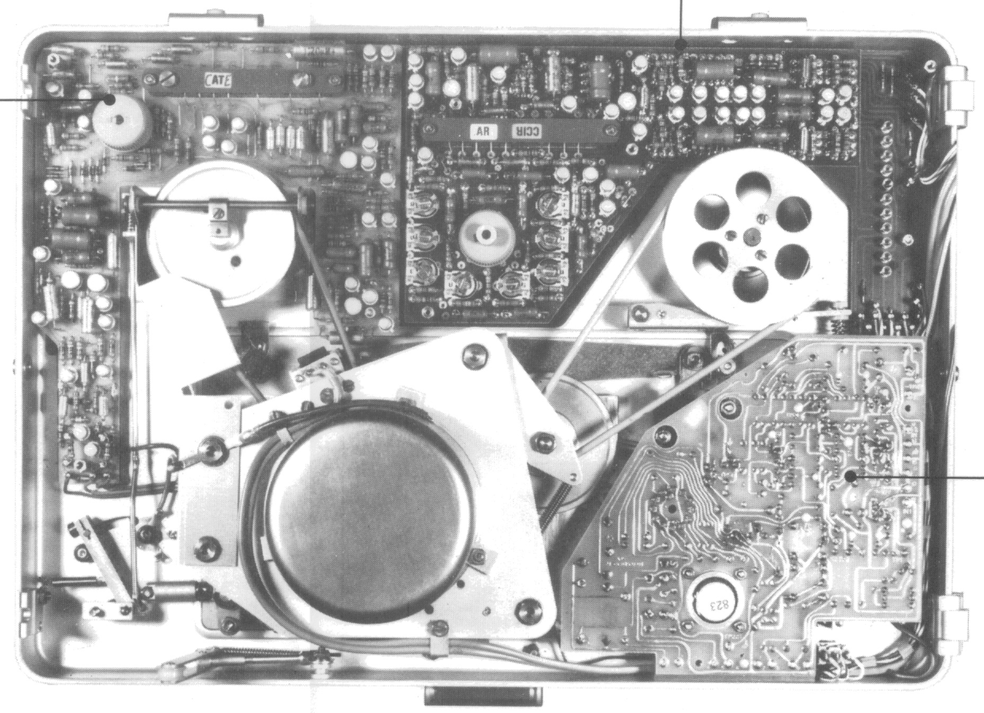

A16

BIAS OSCILLATOR WITH TRANSFORMER FOR PILOT VERSION (SMALL TRACKS)
91 06 814 000

BIAS OSCILLATOR WITH TRANSFORMER FOR STANDARD TRACKS VERSION (NON PILOT)
91 06 813 000

NAGRA IV-S	1.04.88
CIRCUIT LOCATION TAPE DECK	E2-S

1.3 SCHEMATICS

Board	Board name
A1-2-3	MICROPHONE PREAMPLIFIER
A4-5-6	DIRECT AMPLIFIER & REFERENCE OSCILLATOR (SINE WAVE VERSION)
A7-8	MODULOMETER & DIFFERENTIAL INDICATOR
A8-9	VU INDICATOR (OPTIONAL)
A9-10	PHONES SWITCHING & LEVEL CONTROL LINES & PHONES AMPLIFIERS
A11	L.S. AMPLIFIER
A12	MICROPHONE POWER SUPPLY
A14	PLAYBACK AMPLIFIER
A15	RECORDING PREAMPLIFIER WITH CONTROLLED PRE-EMPHASIS
A16	RECORDING AMPLIFIER & BIAS OSCILLATOR
A22	VOLTAGE & SPEED STABILIZER
A23	METER SWITCHING & LIGHT TEMPORIZER
A24	PILOT WITH 0 V DC INPUT & OUTPUT
A25	FREQUENCY METER
A26 A	CRYSTAL GENERATOR
A26 B	CRYSTAL GENERATOR
A28	TIME CODE BLOCK DIAGRAM
A28 1/4	TIME CODE PLAYBACK AMPLIFIER
A28 2/4	TIME CODE MAIN CIRCUIT
A28 3/4	TIME CODE CRYSTAL CIRCUIT
A28 4/4	TIME CODE KEYBOARD AND DISPLAY
A29	QSIA - AATON TC . SERIAL INTERFACE

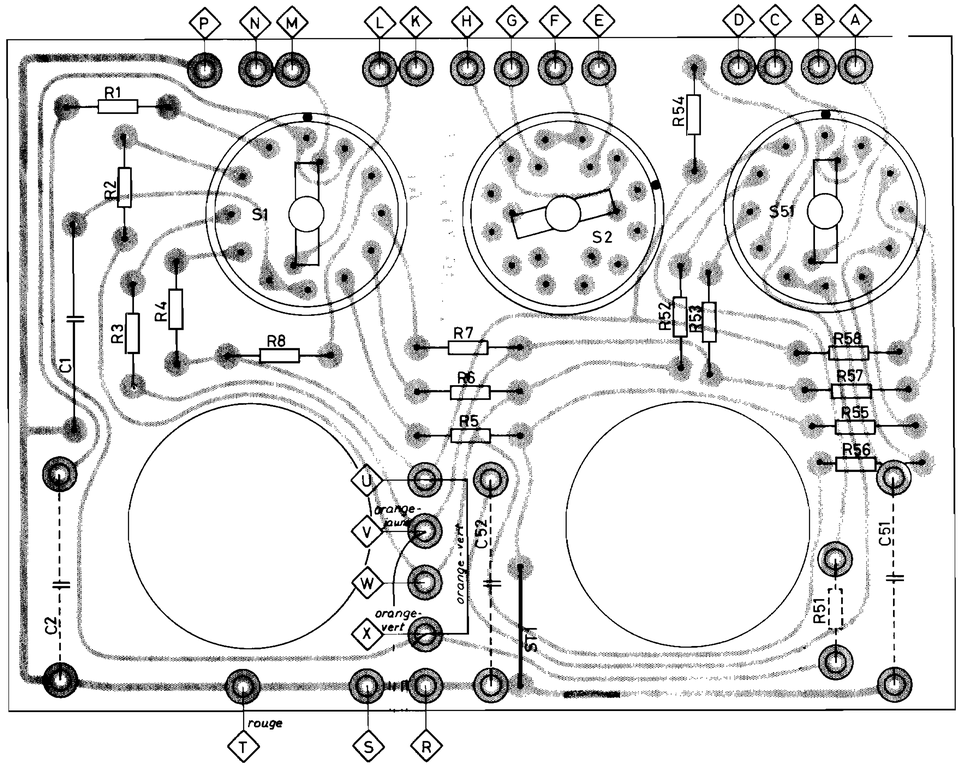

A1

91 06 715 000

index B

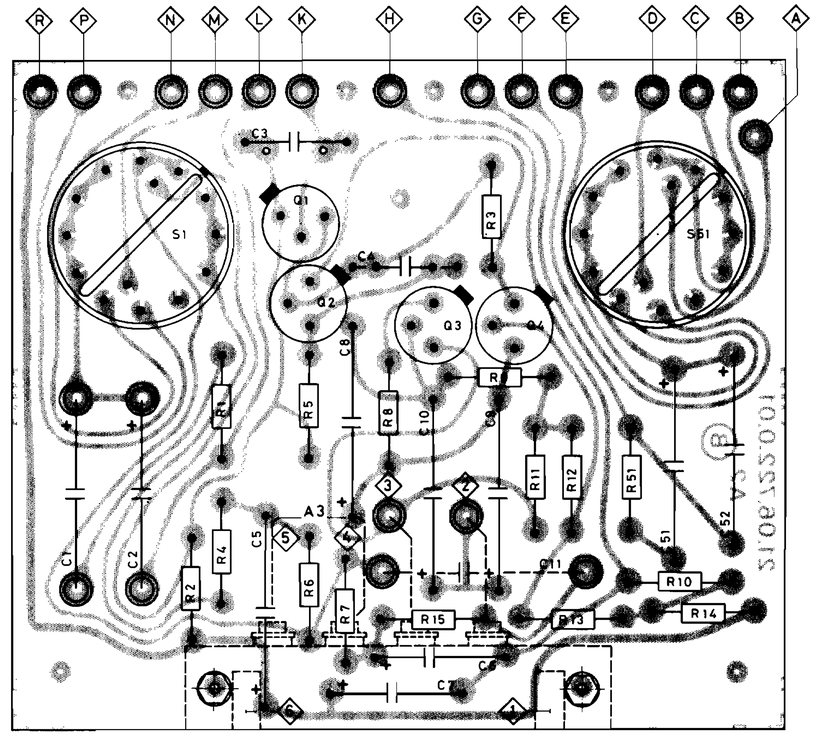

A2

91 06 722 000

index B

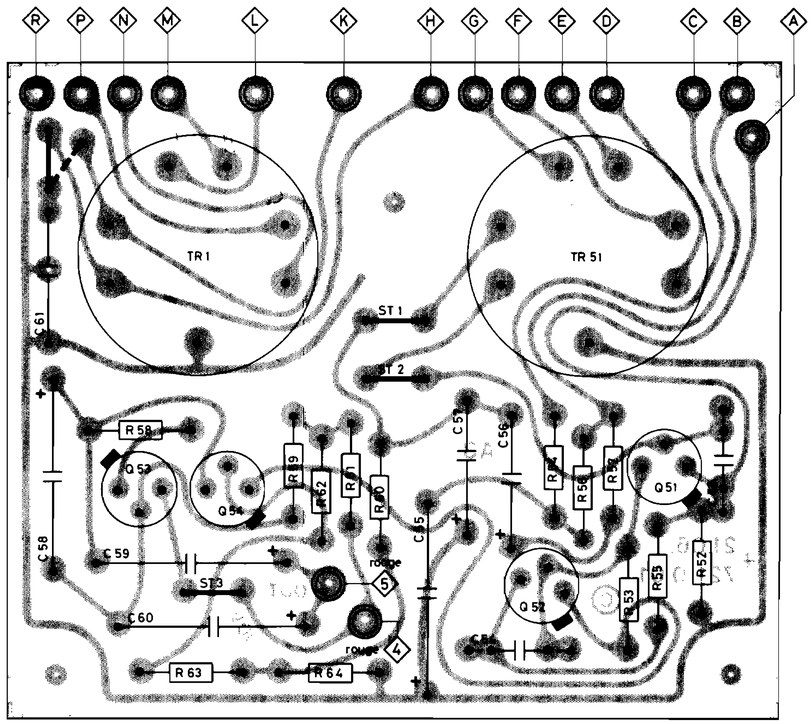

A3

91 06 721 000

index C

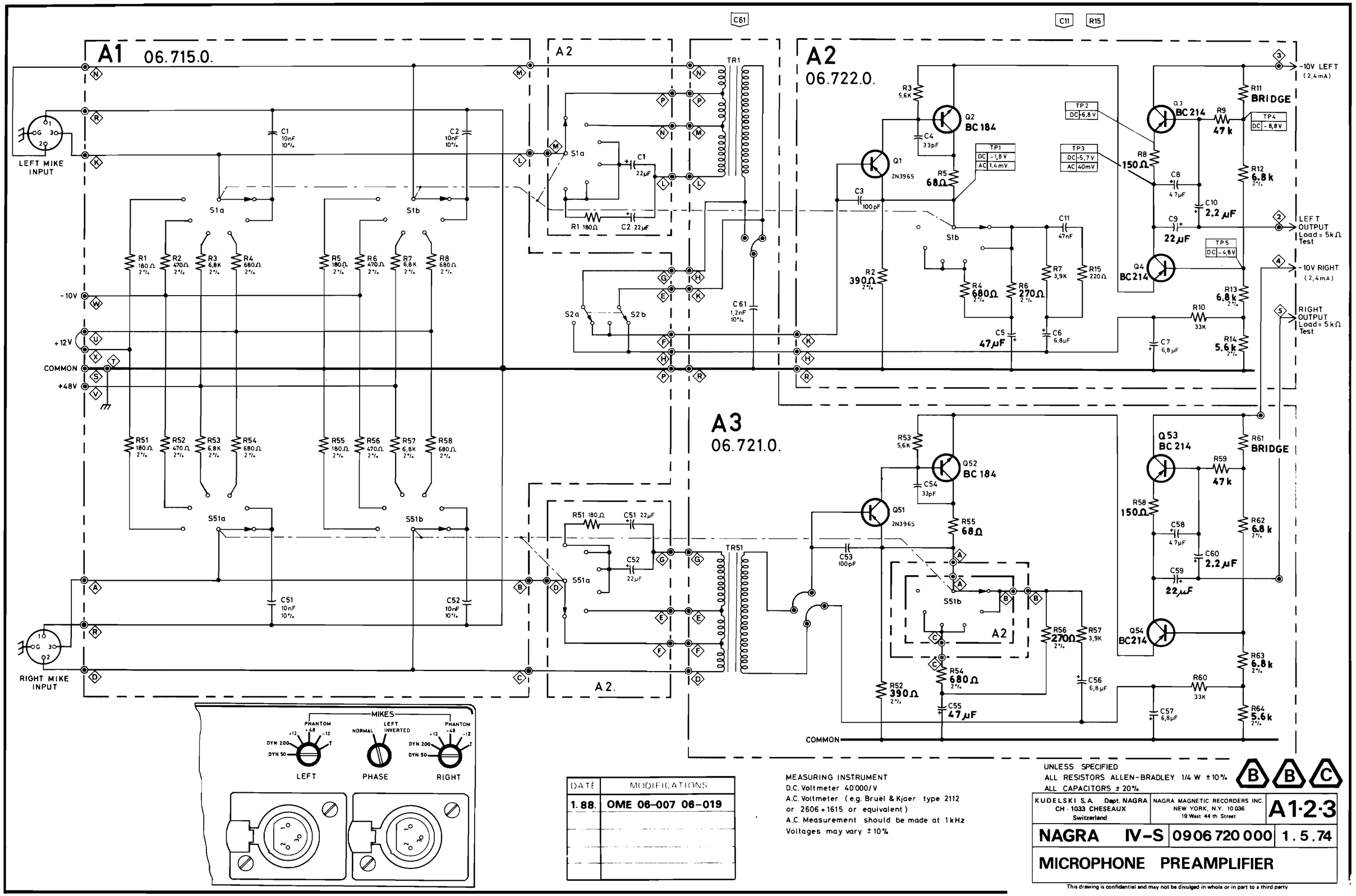

DATE	MODIFICATIONS
1.88.	OME 06-007 06-019

MEASURING INSTRUMENT
D.C. Voltmeter 40'000/V
A.C. Voltmeter (e.g. Bruël & Kjaer type 2112 or 2606 + 1615 or equivalent)
A.C. Measurement should be made at 1kHz
Voltages may vary ± 10%

UNLESS SPECIFIED
ALL RESISTORS ALLEN-BRADLEY 1/4 W ± 10%
ALL CAPACITORS ± 20%

B B C

KUDELSKI S.A. Dept. NAGRA
CH - 1033 CHESEAUX
Switzerland

NAGRA MAGNETIC RECORDERS INC.
NEW YORK, N.Y. 10 036
19 West 44 th Street

A1·2·3

NAGRA IV-S | 0906 720 000 | 1.5.74

MICROPHONE PREAMPLIFIER

This drawing is confidential and may not be divulged in whole or in part to a third party

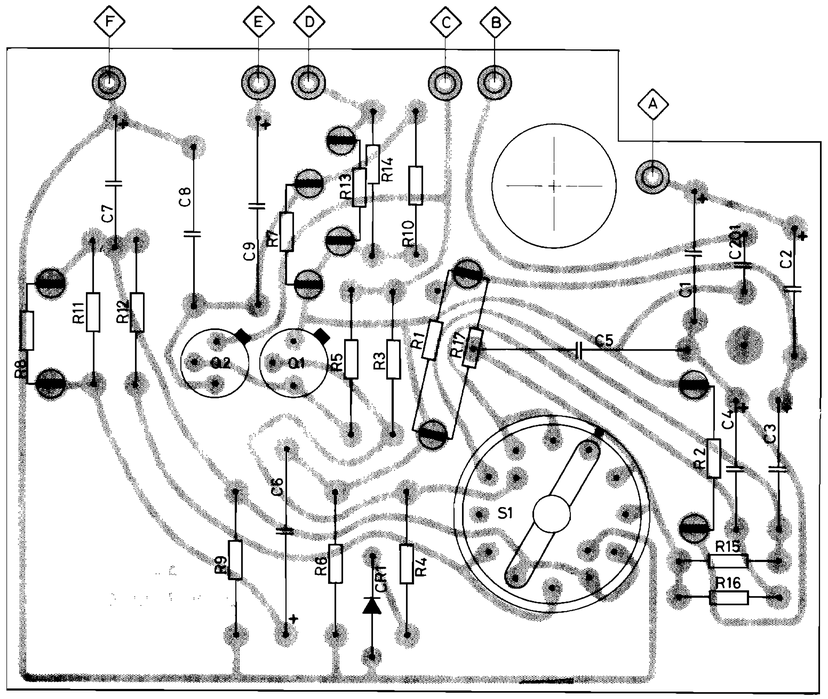

A4

91 06 731 000
index C

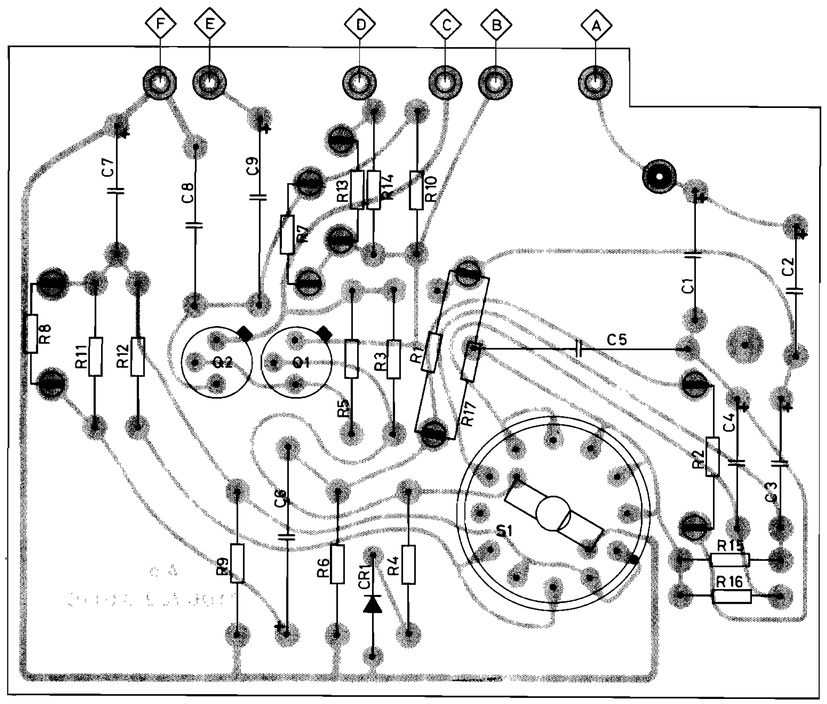

A5

91 06 732 000
index C

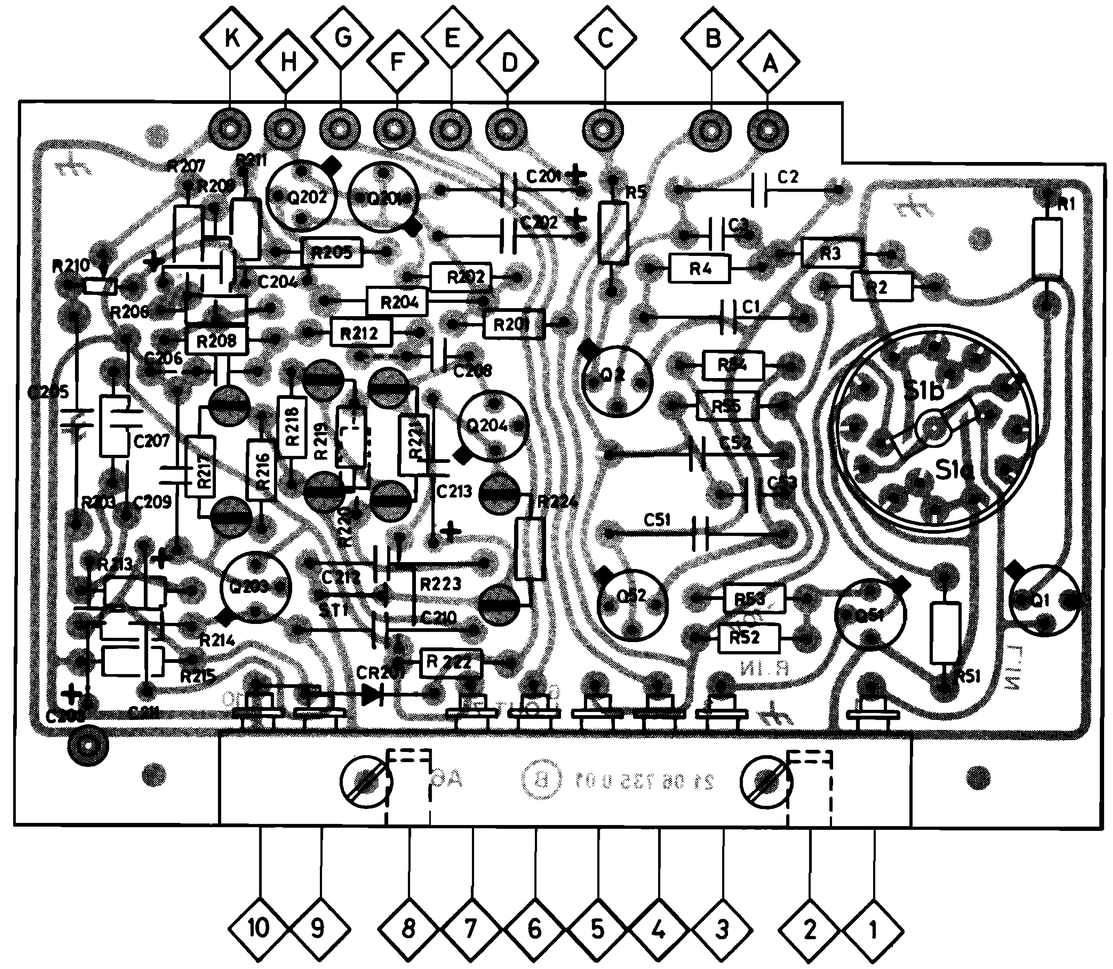

A6

91 06 735 000
index B

NAGRA IV-S

DIRECT AMPLIFIER &
REFERENCE OSCILLATOR (SINE WAVE VERSION)

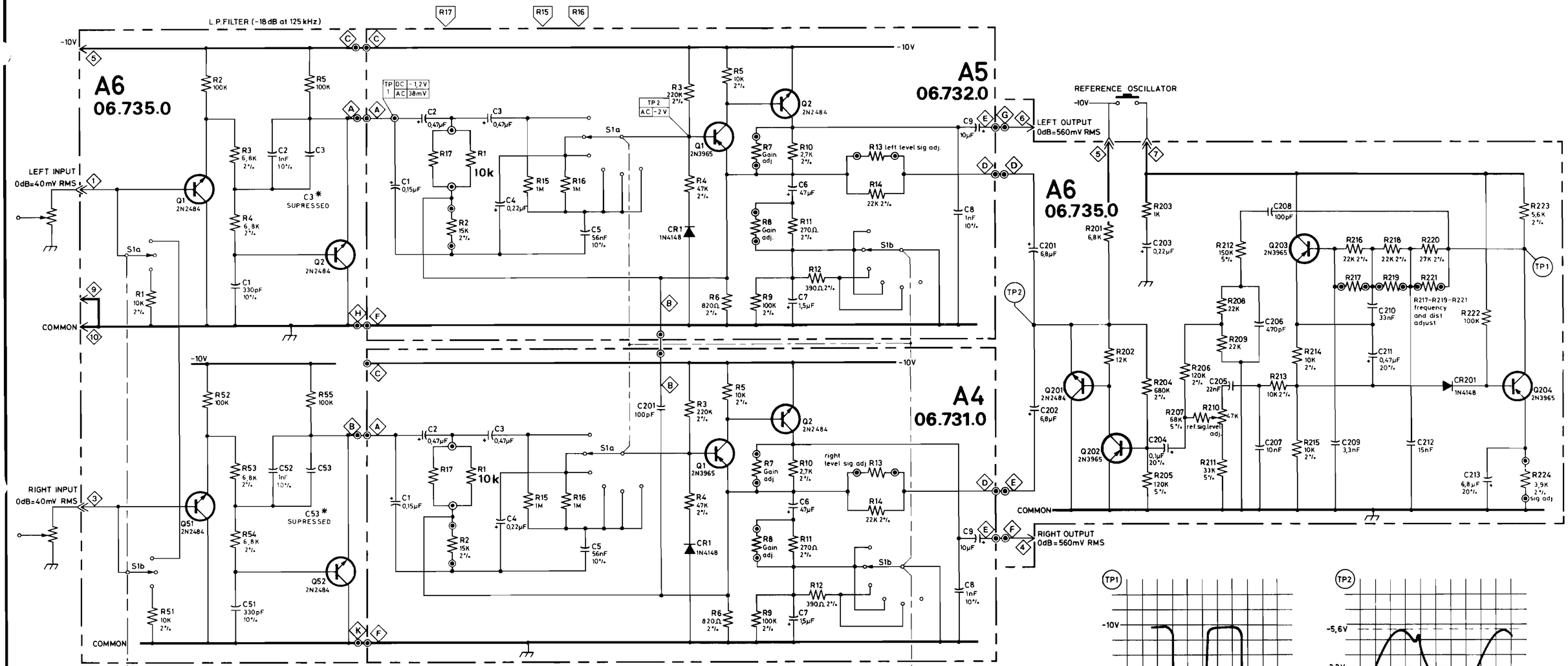

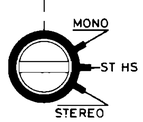

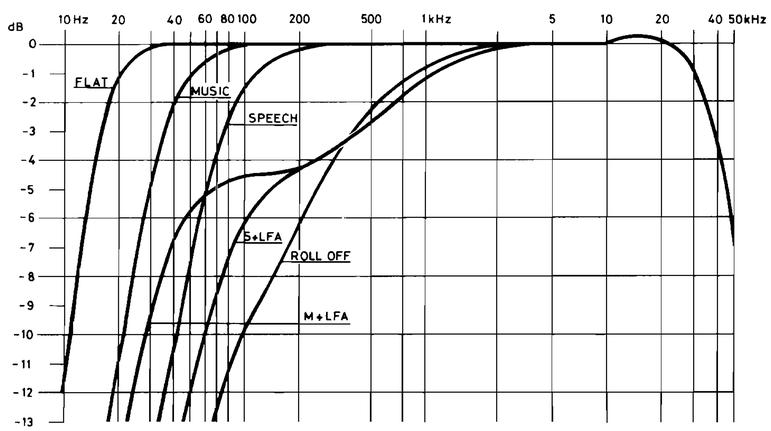

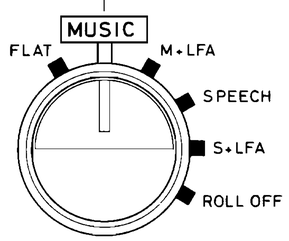

UNLESS SPECIFIED
ALL RESISTORS ALLEN-BRADLEY 1/4 W ± 10%
ALL CAPACITORS ± 20%

MEASURING INSTRUMENT
D.C. Voltmeter 40'000 Ω/V
A.C. Voltmeter
(e.g. Brüel & Kjaer type 2112 or 2606+1615 or equivalent.)
A.C. Measurement should be made at 1kHz
Voltages may vary ± 10%

A4 C
A5 C
A6 B

DATE	MODIFICATIONS
1.88	Revision

KUDELSKI S.A. Dept. NAGRA
CH - 1033 CHESEAUX
Switzerland

NAGRA MAGNETIC RECORDERS INC.
NEW YORK, N.Y. 10 036
19 West 44 th Street

NAGRA IV-S | **09.06.730000** | **26.5.76**

DIRECT AMPLIFIER AND REFERENCE OSCILLATOR (SINE WAVE VERSION)

This drawing is confidential and may not be divulged in whole or in part to a third party

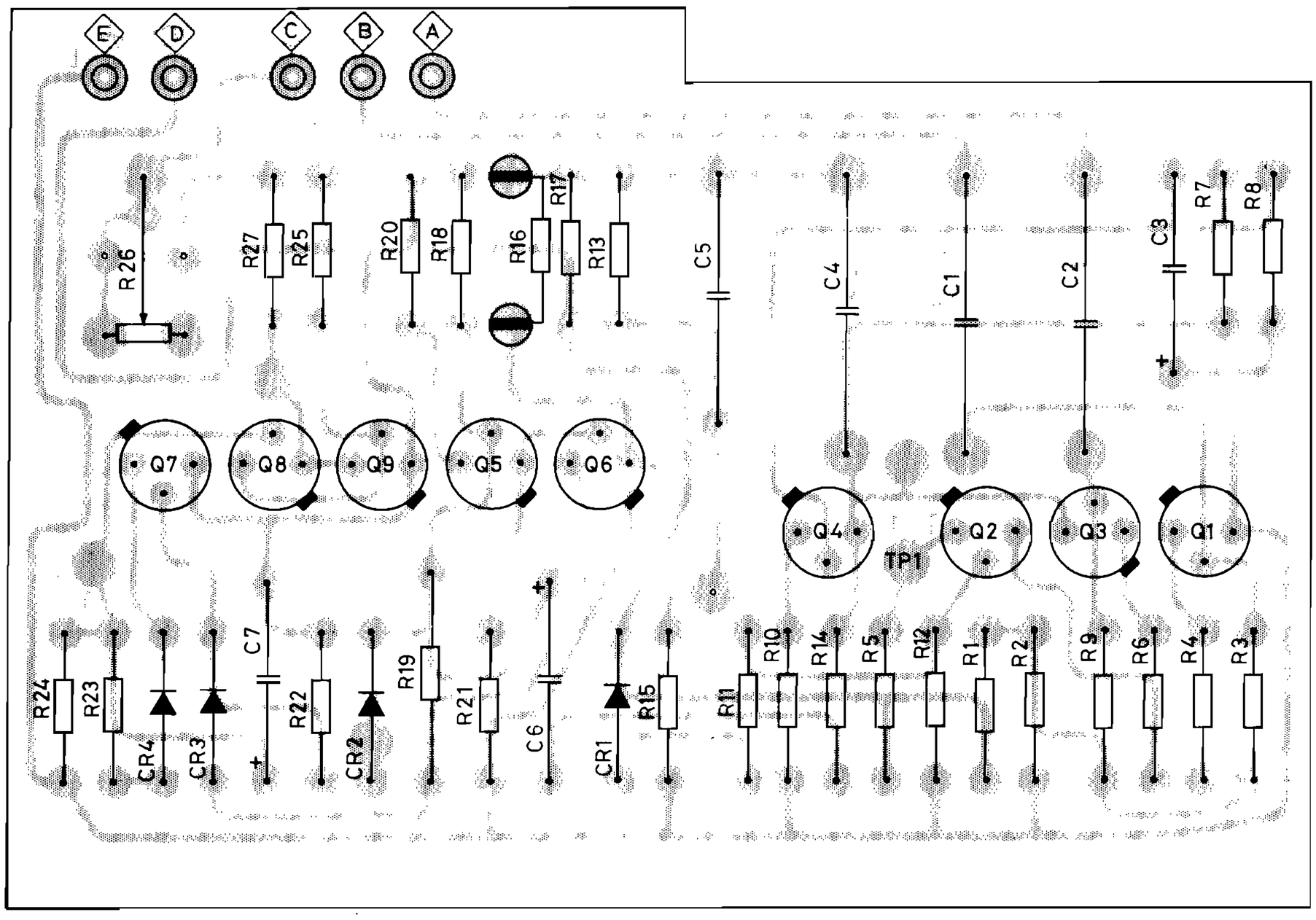

A7

91 06 741 000

Index B

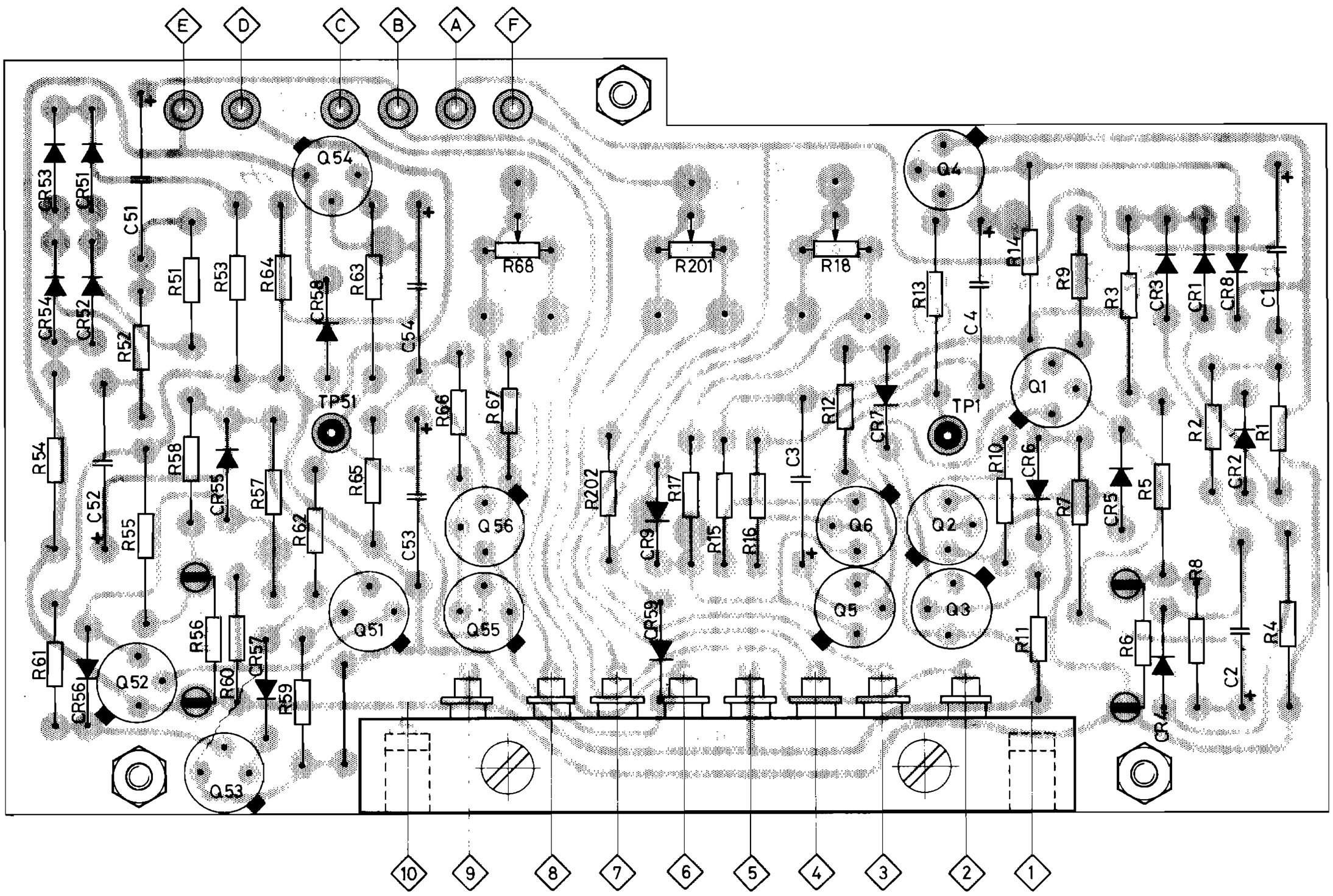

A8

91 06 742 000

index C

NAGRA IV-S

MODULOMETER & DIFFERENTIAL INDICATOR

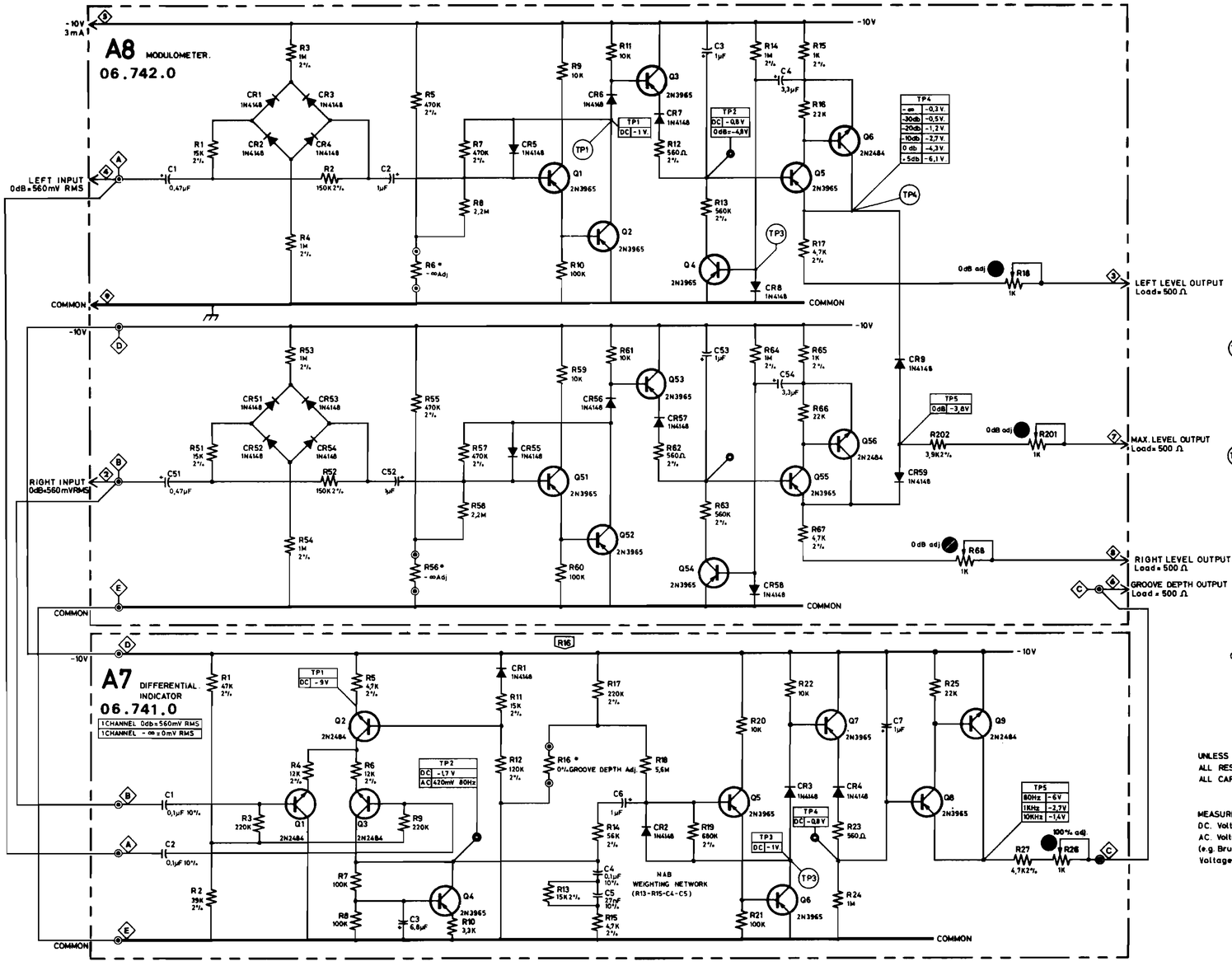

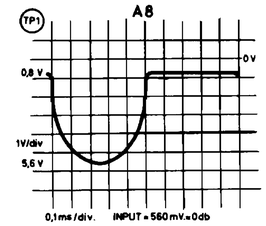

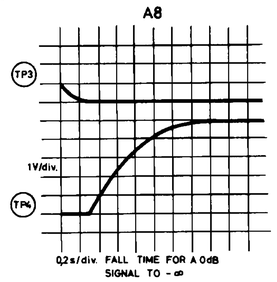

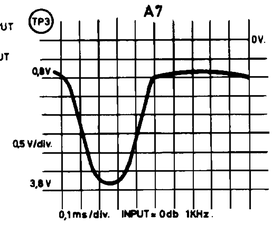

UNLESS SPECIFIED
ALL RESISTORS ALLEN-BRADLEY 1/4 W. ± 10%
ALL CAPACITORS ± 20%

MEASURING INSTRUMENT
D.C. Voltmeter 40 000 Ω/V
A.C. Voltmeter
(e.g. Brüel & Kjaer type 2112 or 2606 + 1615 or equivalent.
Voltages may vary ± 10%

A7 B
A8 C

DATE	MODIFICATIONS
1.88	Revision

KUDELSKI S.A. Dept. NAGRA
CH-1033 CHESEAUX
Switzerland

This drawing is confidential and may not be divulged in whole or in part to a third party

NAGRA MAGNETIC RECORDERS INC
19 West 44th Street
NEW YORK, N.Y. 10 036

NAGRA IV-S 09.06.740.0.00

MODULOMETER & DIFFERENTIAL INDICATOR

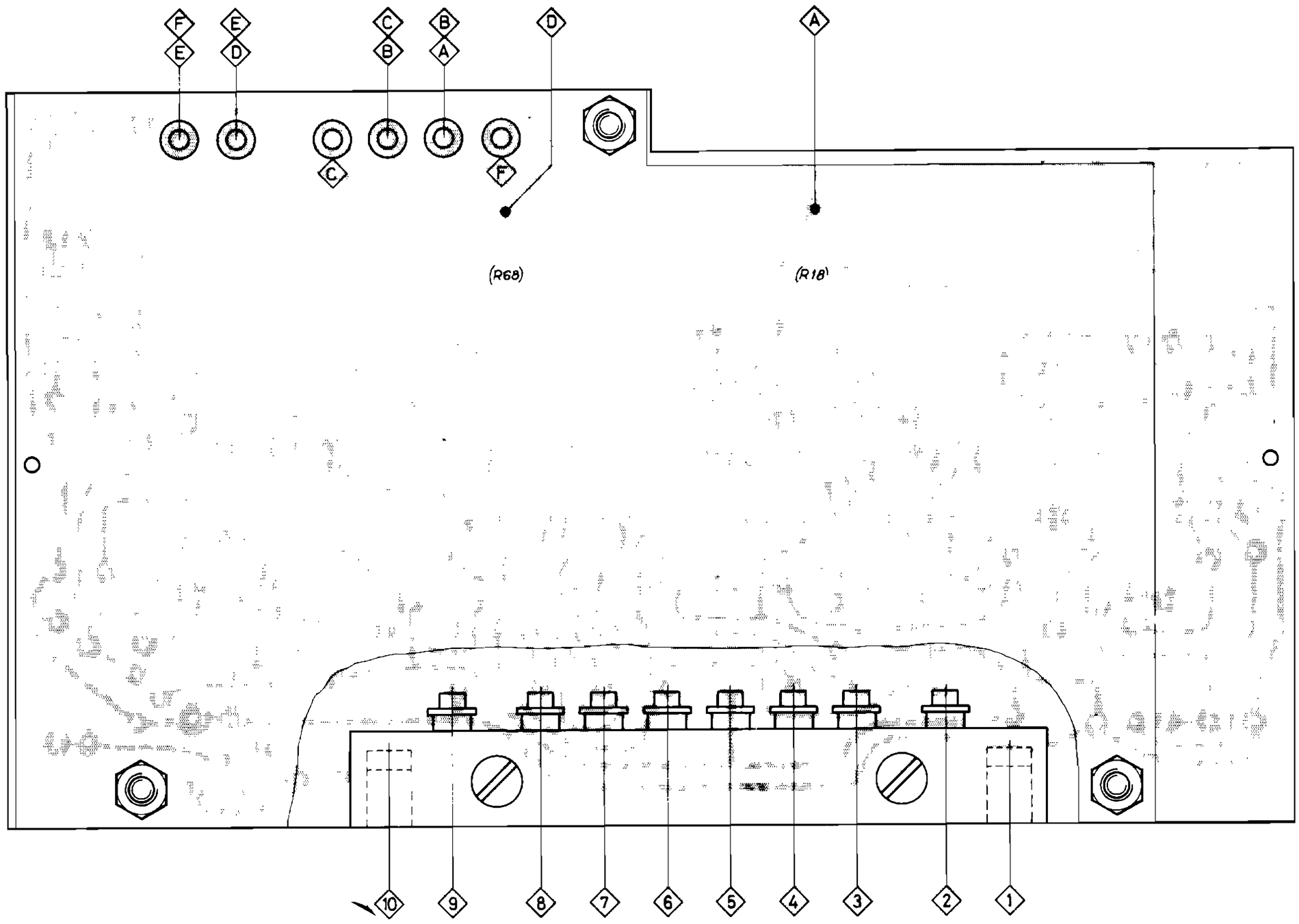

A8

91 06 744 000

index C

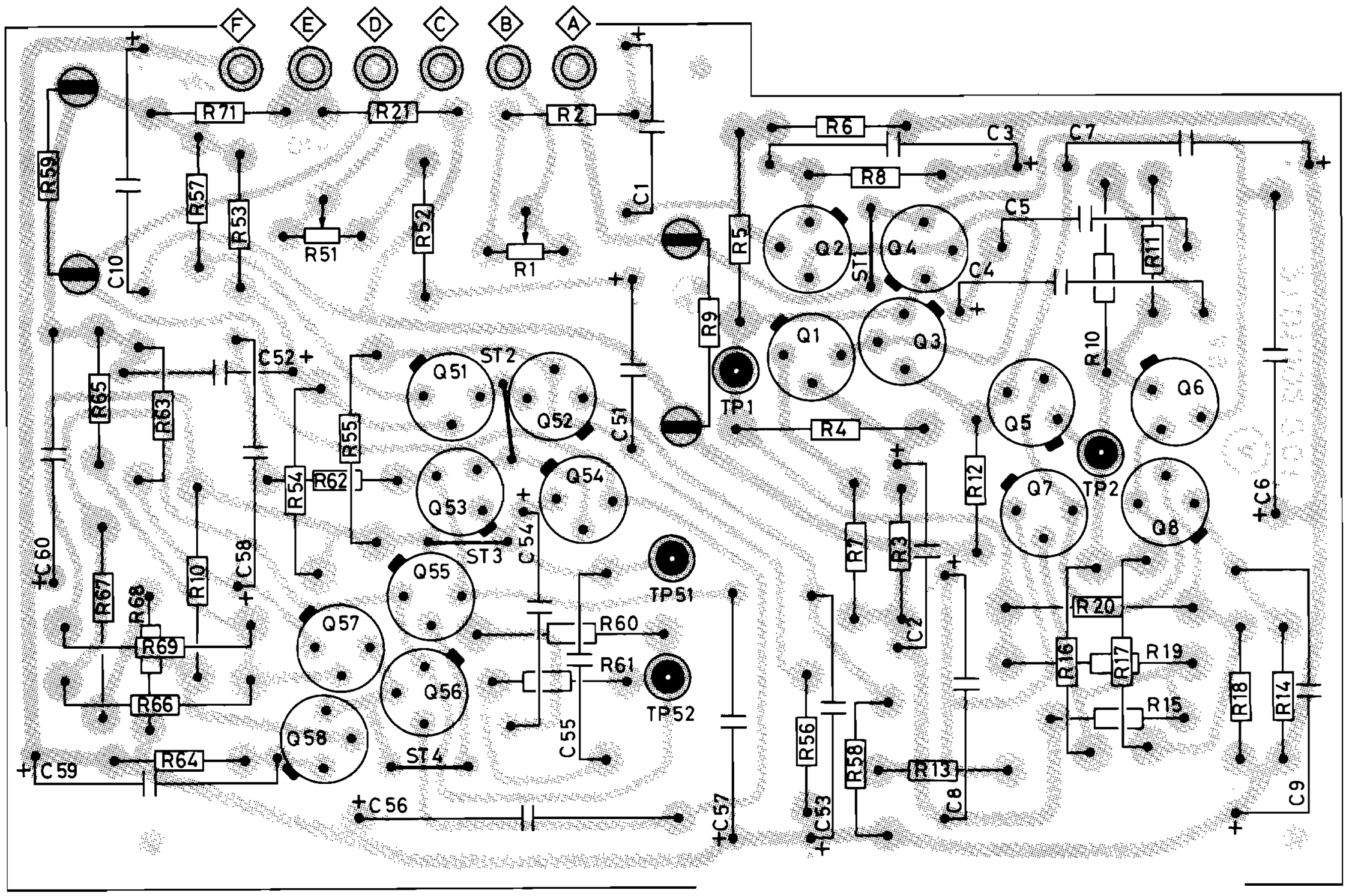

A9

97 01 102 000

index A

NAGRA IV-S

VU INDICATOR

(Optional)

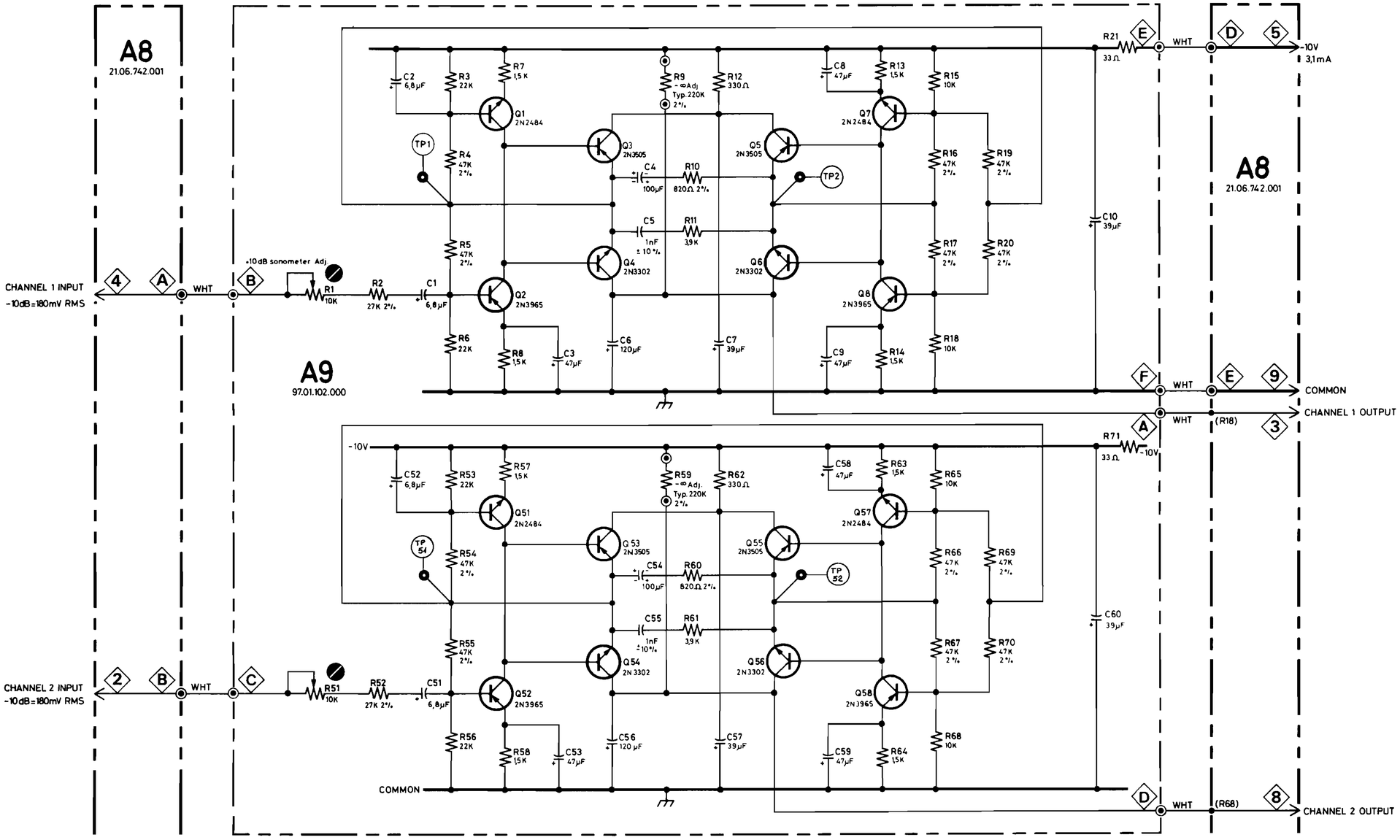

UNLESS SPECIFIED
ALL RESISTORS 1/4W ±10%
ALL CAPACITORS ±20%
AC MEASUREMENT AT f=1kHz
MEASURING INSTRUMENT
DC VOLTMETER 40000Ω/V
AC VOLTMETER (e.g. Bruël & Kjaer type 2112 or 2606 + 1615 or equivalent)
Voltages may vary ±10%

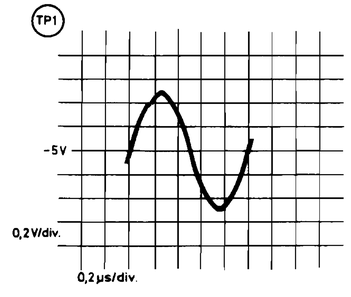

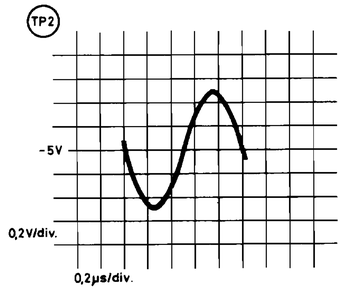

(OPTIONAL)

A8 C
A9 A

KUDELSKI SA Dept. NAGRA CH-1033 CHESEAUX Switzerland	NAGRA MAGNETIC RECORDERS INC. NEW YORK, N.Y. 10036 19 West 44 th Street	A8-9
NAGRA IV-S	09.06.744.0.00	19.11.85
VU INDICATOR		

This drawing is confidential and may not be divulged in whole or in part to a third party

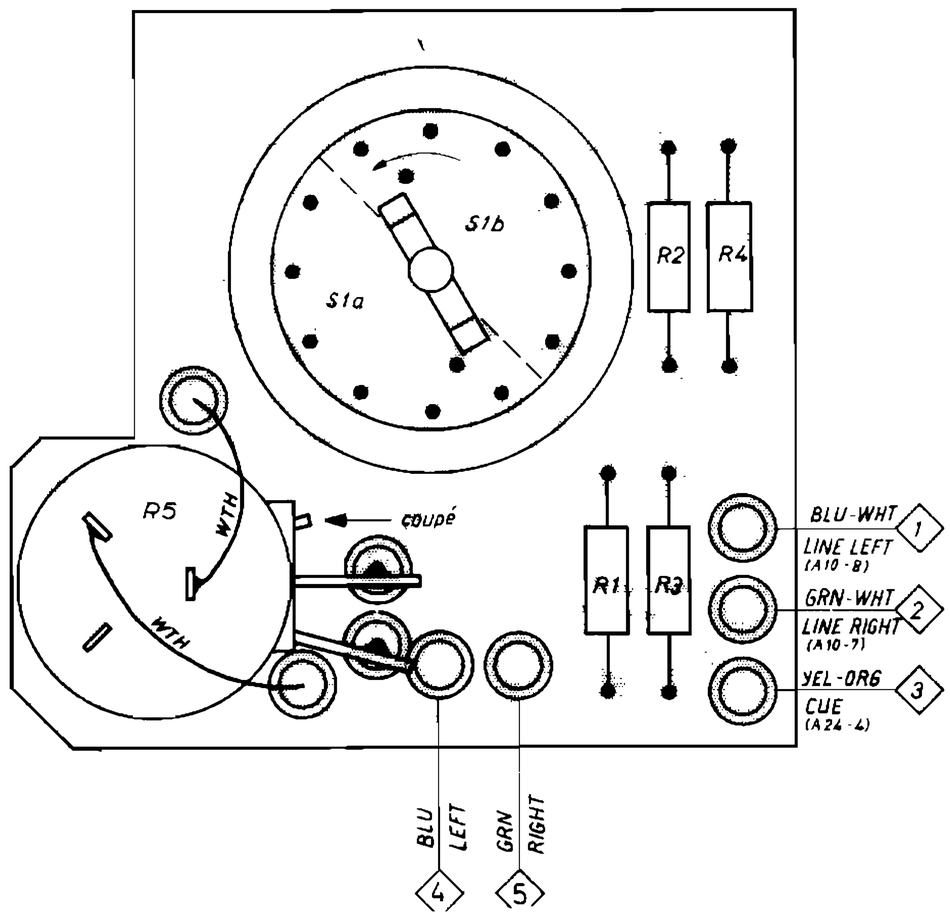

A9

91 06 710 100

index ⊖

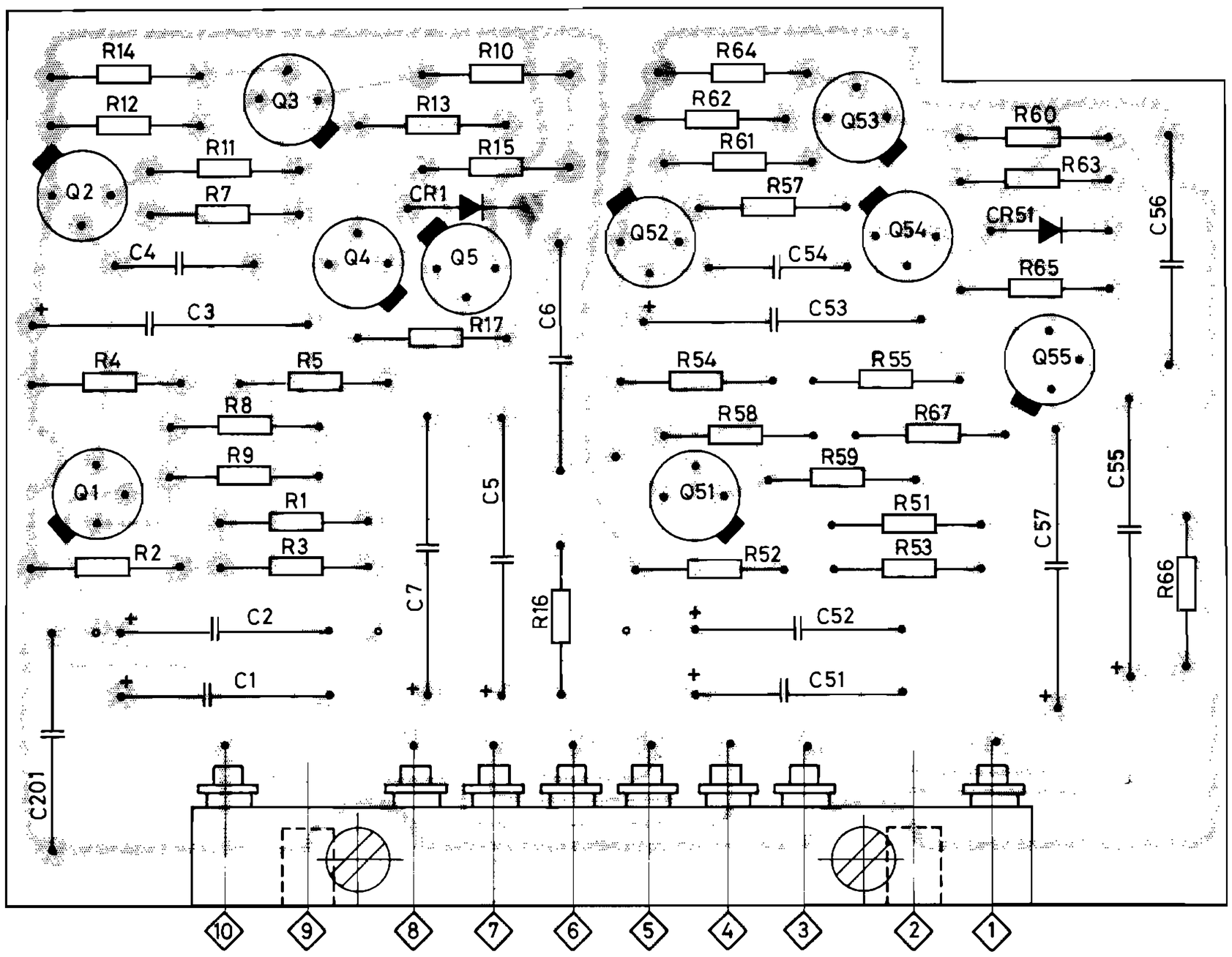

A10

91 06 745 000

index C

NAGRA IV-S

LINES & PHONES AMPLIFIERS

A9-A10

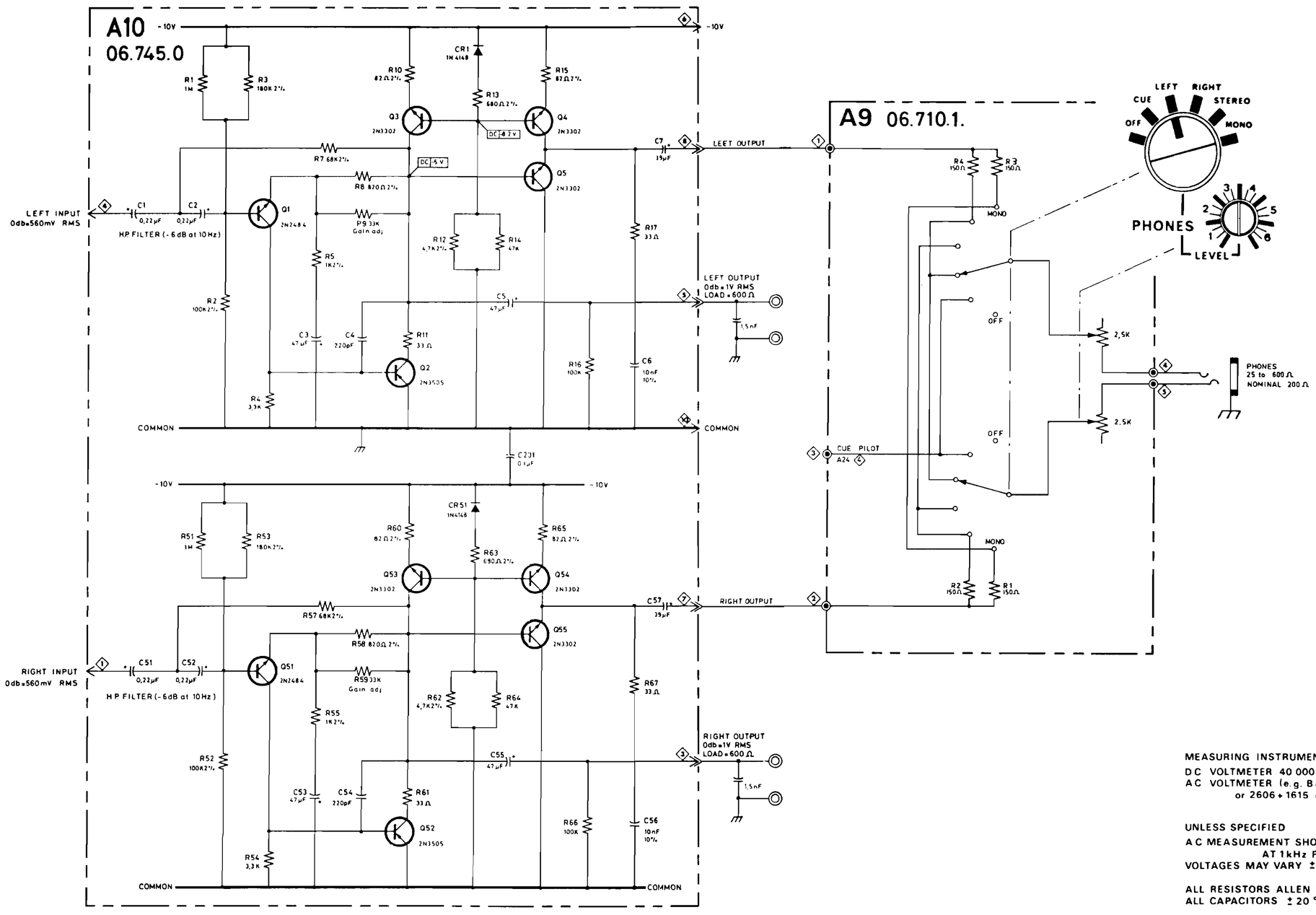

MEASURING INSTRUMENT
DC VOLTMETER 40 000 Ω/V
AC VOLTMETER (e.g. B&K Type 2112 or 2606 + 1615 or equivalent)

UNLESS SPECIFIED
AC MEASUREMENT SHOULD BE MADE AT 1kHz FOR 0dB LEVEL
VOLTAGES MAY VARY ± 10 %

ALL RESISTORS ALLEN BRADLEY 1/4 W ± 10 %
ALL CAPACITORS ± 20 %

ALL CONNECTORS VIEWED FROM THE OUTSIDE

DATE	MODIFICATIONS
1.88	Revision

KUDELSKI S.A. Dept. NAGRA CH 1033 CHESEAUX Switzerland	NAGRA MAGNETIC RECORDERS INC NEW YORK, N.Y. 10036 19 West 44 th Street	A9-10
NAGRA IV-S	09 06745 000	26 2 80
LINES AND PHONES AMPLIFIERS		

This drawing is confidential and may not be divulged in whole or in part to a third party

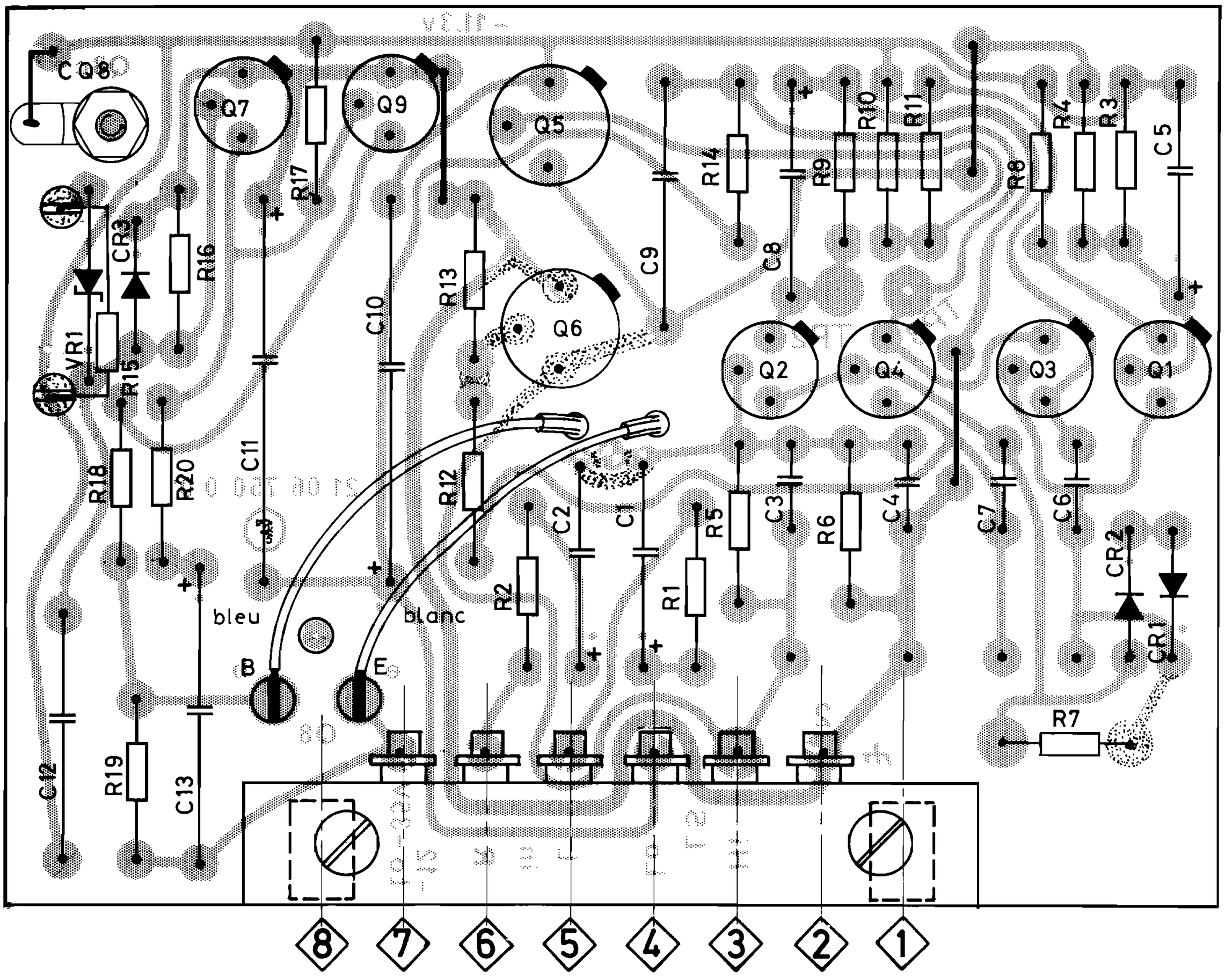

A11

91 06 750 000

index F

NAGRA IV-S

L.S. AMPLIFIER

A11

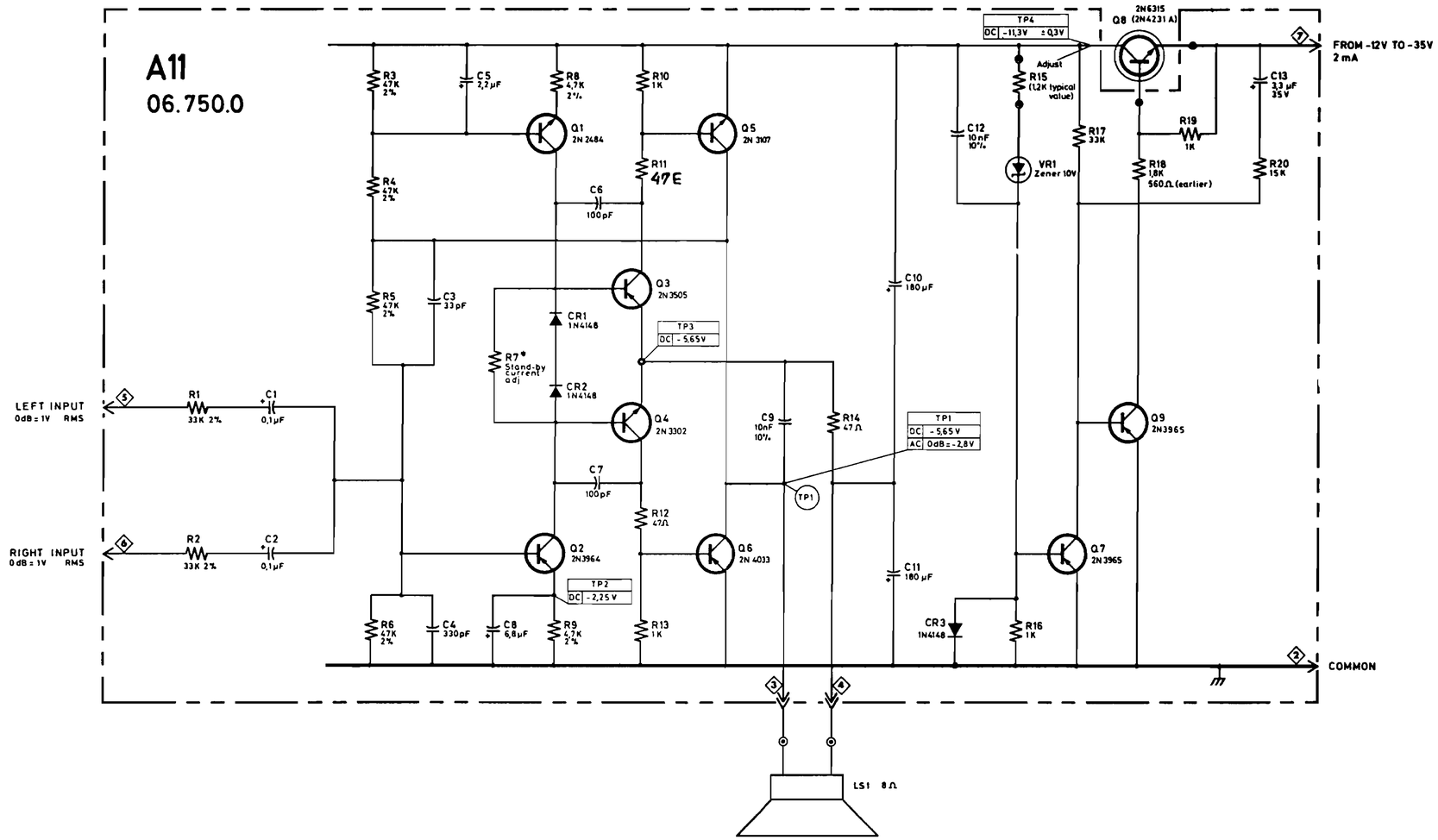

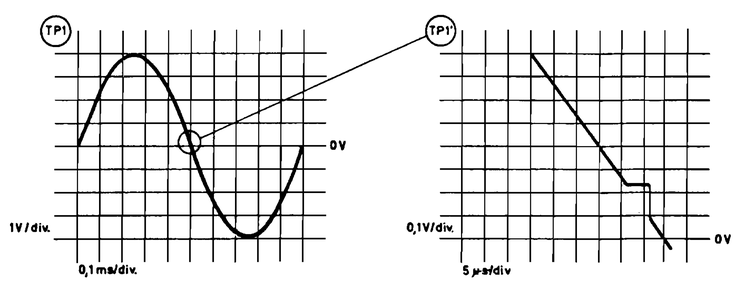

MEASURING INSTRUMENT
DC VOLTMETER 40 000 Ω/V
AC VOLTMETER (e.g. B&K Type 2112 or 2606 + 1615 or equivalent)

UNLESS SPECIFIED
AC MEASUREMENT SHOULD BE MADE AT 1kHz FOR 0dB LEVEL
VOLTAGES MAY VARY ± 10 %

ALL RESISTORS ALLEN BRADLEY 1/4 W ± 10 %
ALL CAPACITORS ± 20 %

ALL CONNECTORS VIEWED FROM THE OUTSIDE

DATE	MODIFICATIONS
6.85	REVISION
1.88	REVISION

KUDELSKI S.A. Dept. NAGRA CH - 1033 CHESEAUX Switzerland	NAGRA MAGNETIC RECORDERS INC. NEW YORK, N.Y. 10036 19 West 44 th Street	A11
NAGRA IV-S	09.06.750.000	13.3.80
L.S. AMPLIFIER		

This drawing is confidential and may not be divulged in whole or in part to a third party

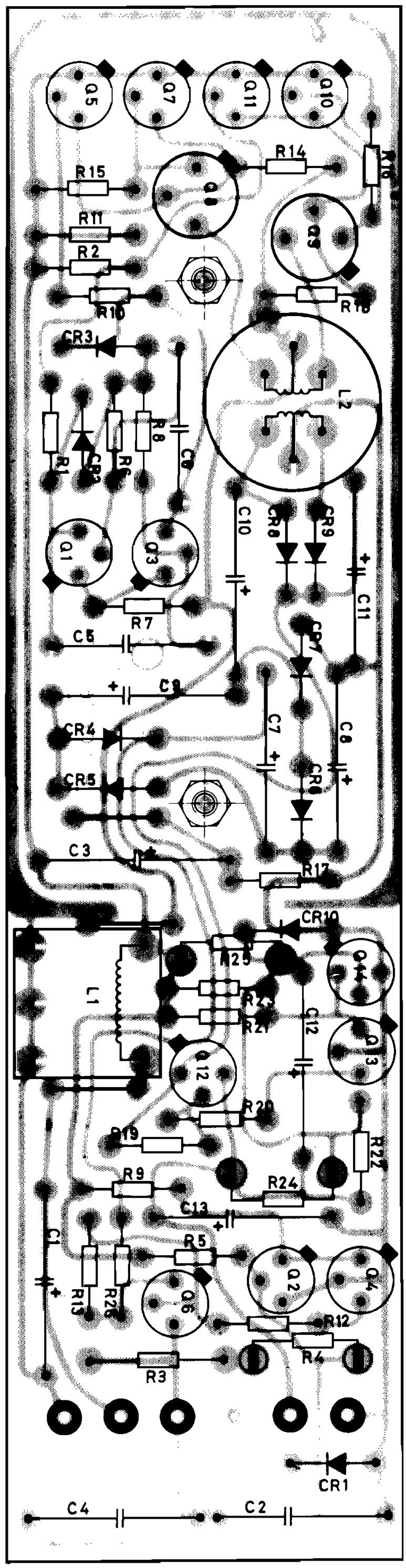

A12

91 06 760 100

index A

NAGRA IV-S

MICROPHONE POWER SUPPLY

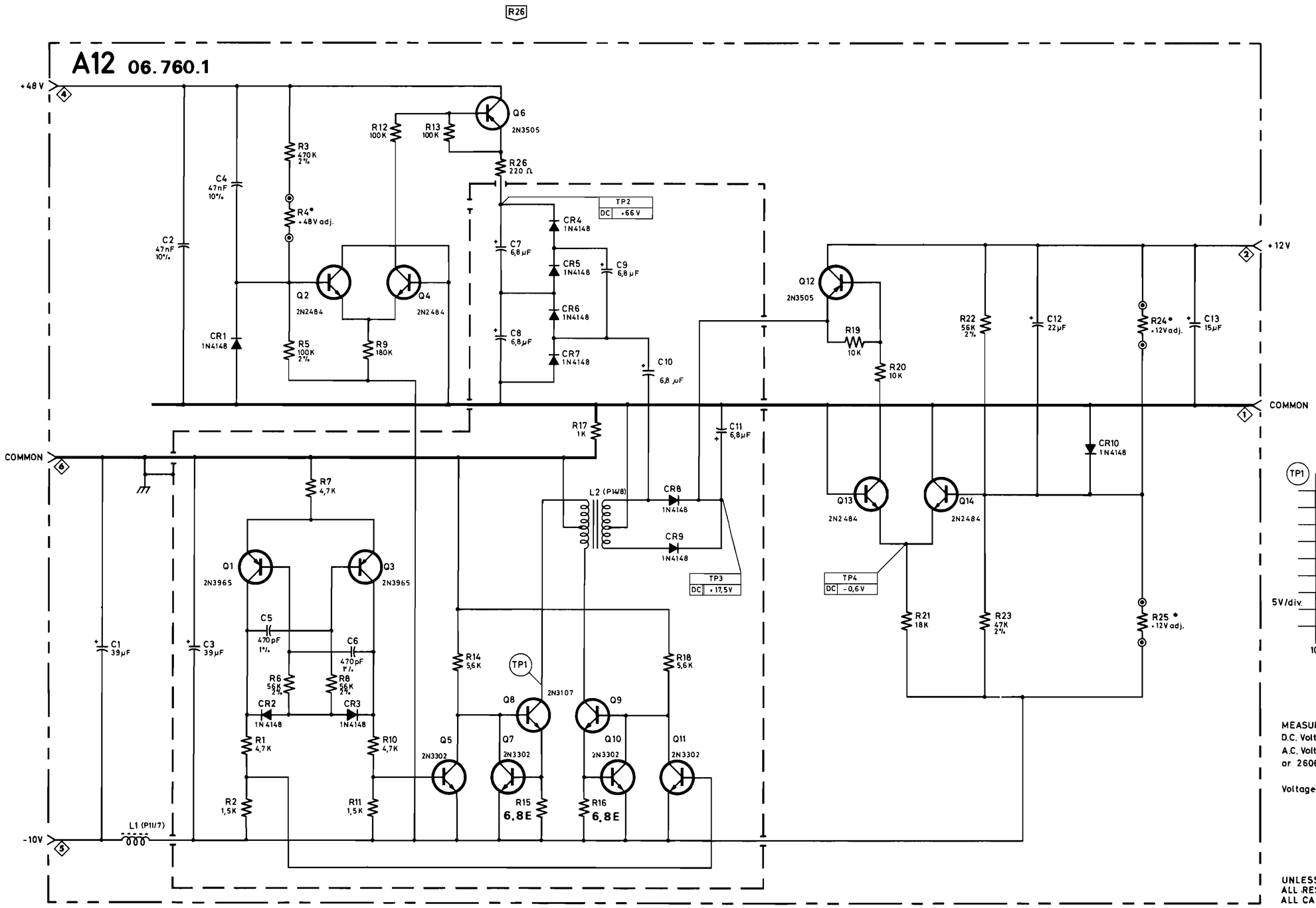

DATE	MODIFICATIONS
1.88	Revision

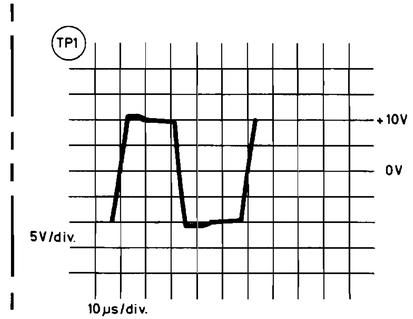

MEASURING INSTRUMENT
D.C. Voltmeter 40'000 Ω/ V
A.C. Voltmeter (e.g. Bruël & Kjaer type 2112 or 2606 + 1615 or equivalent

Voltages may vary ± 10%

UNLESS SPECIFIED
ALL RESISTORS ALLEN BRADLEY 1/4W ± 10%
ALL CAPACITORS ± 20%

Modification:	Valid from ser. N°:	KUDELSKI - Dept. NAGRA · CHESEAUX CH 1033 Switzerland · Telex 24 392
Date: 1 5 74	This drawing is confidential and may not be divulged in whole or in part to a third party.	NAGRA MAGNETIC RECORDERS INC. 19 West 44th Street - New York N.Y. 10036 Phone: (212) 661-8066
CIRCUIT DIAGRAM: MICROPHONES POWER SUPPLY		IV-S
Copy:	KUDELSKI	09 06 760 000

Drawn / Controlled / Checked / Printed — nb.

A12 A

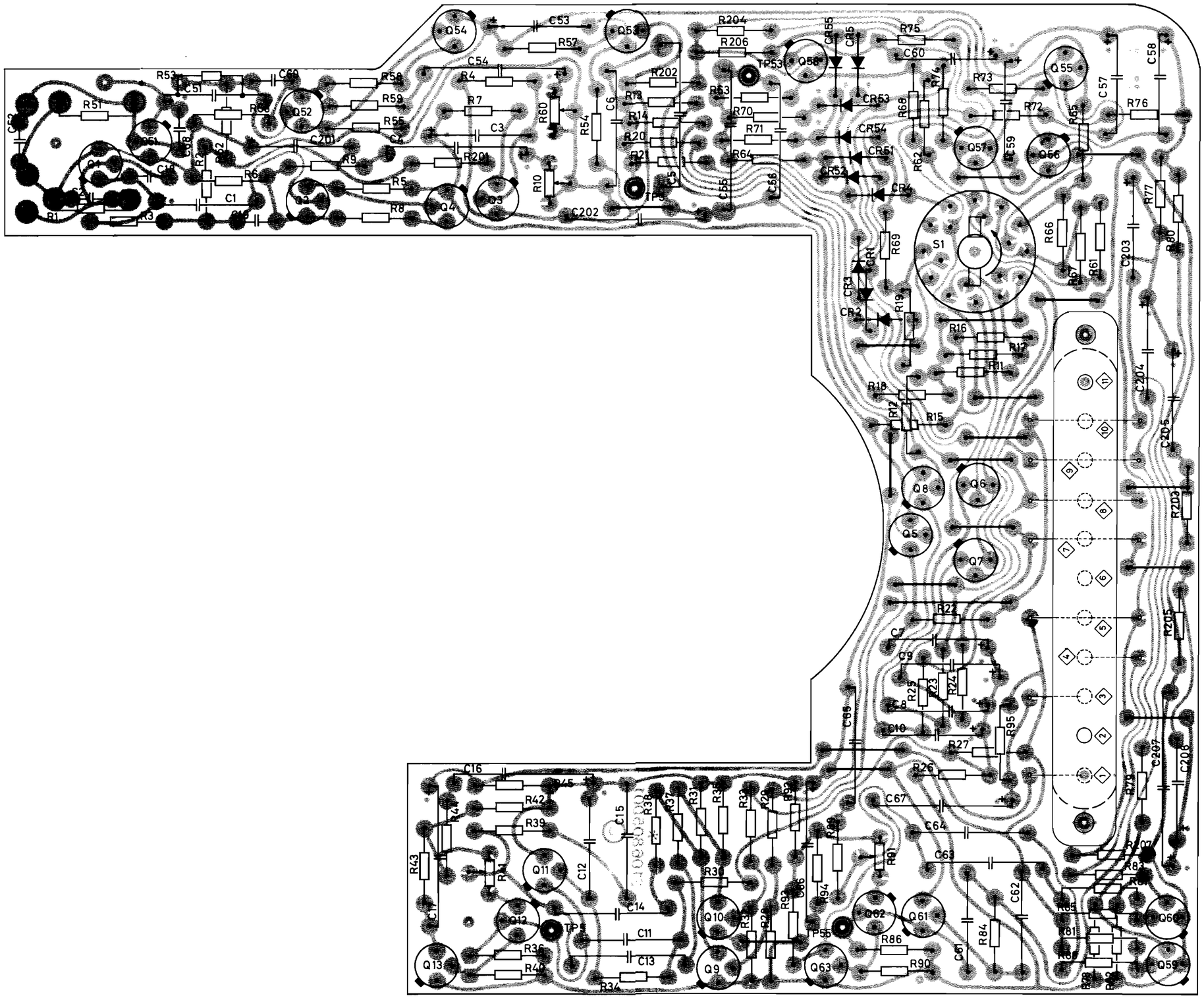

A14

91 06 805 000
Index C

NAGRA IV-S
PLAYBACK AMPLIFIER

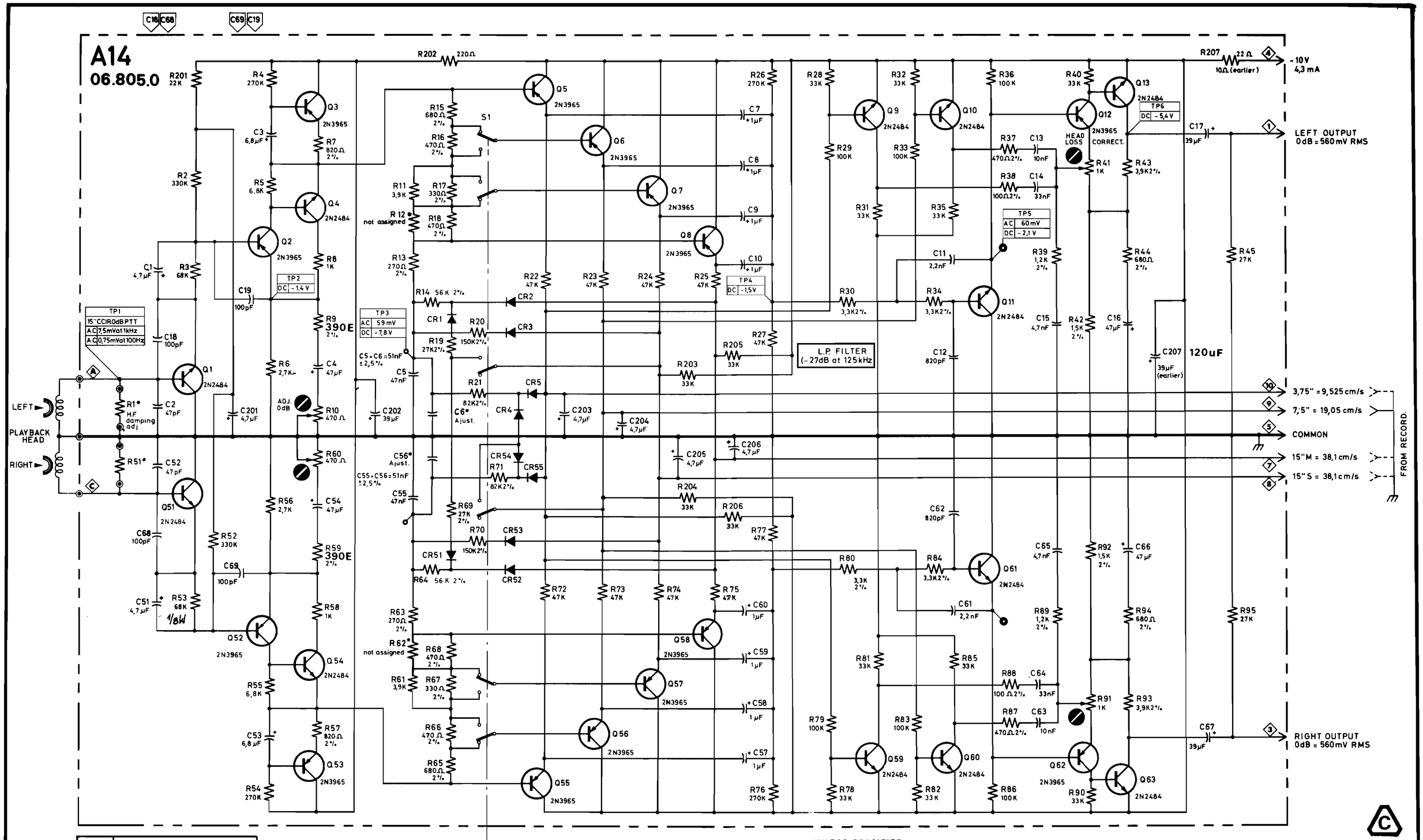

DATE	MODIFICATIONS
1.88.	REVISION

MEASURING INSTRUMENT
DC VOLTMETER 40 000 Ω/V
AC VOLTMETER (e.g. B&K Type 2112 or 2606 + 1615 or equivalent)

UNLESS SPECIFIED
AC MEASUREMENT SHOULD BE MADE AT 1kHz FOR 0dB LEVEL
VOLTAGES MAY VARY ±10 %

ALL RESISTORS ALLEN BRADLEY 1/4 W ±10 %
ALL CAPACITORS ±20 %
ALL DIODES 1N4148
ALL CONNECTORS VIEWED FROM THE OUTSIDE

KUDELSKI S.A. Dept. NAGRA CH-1033 CHESEAUX Switzerland	NAGRA MAGNETIC RECORDERS INC. NEW YORK, N.Y. 10036 19 West 44 th Street	A 14
NAGRA IV-S	09.06.805.000	31.5.76
PLAYBACK AMPLIFIER		

This drawing is confidential and may not be divulged in whole or in part to a third party

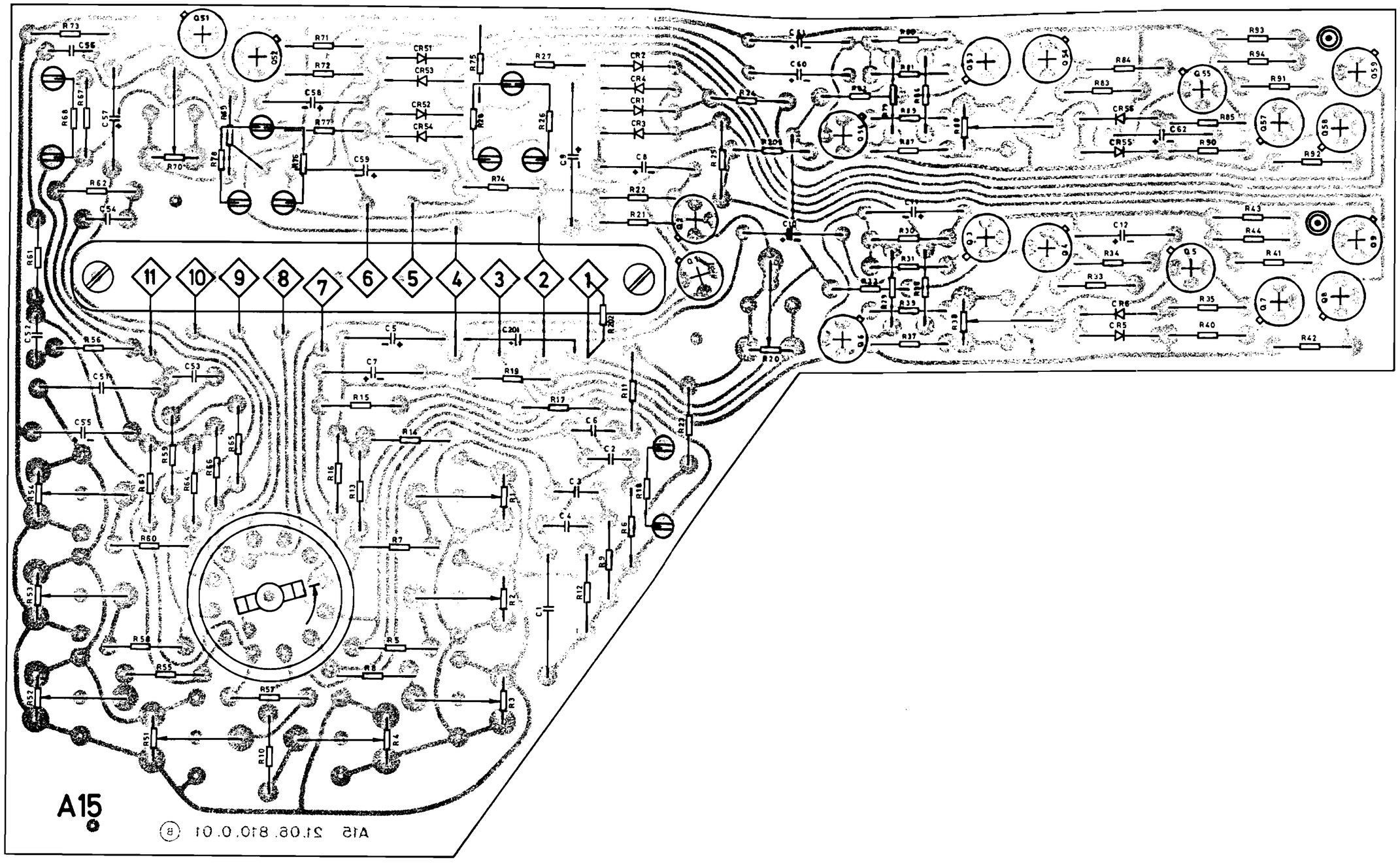
A15
A15 21.06.810.0.01

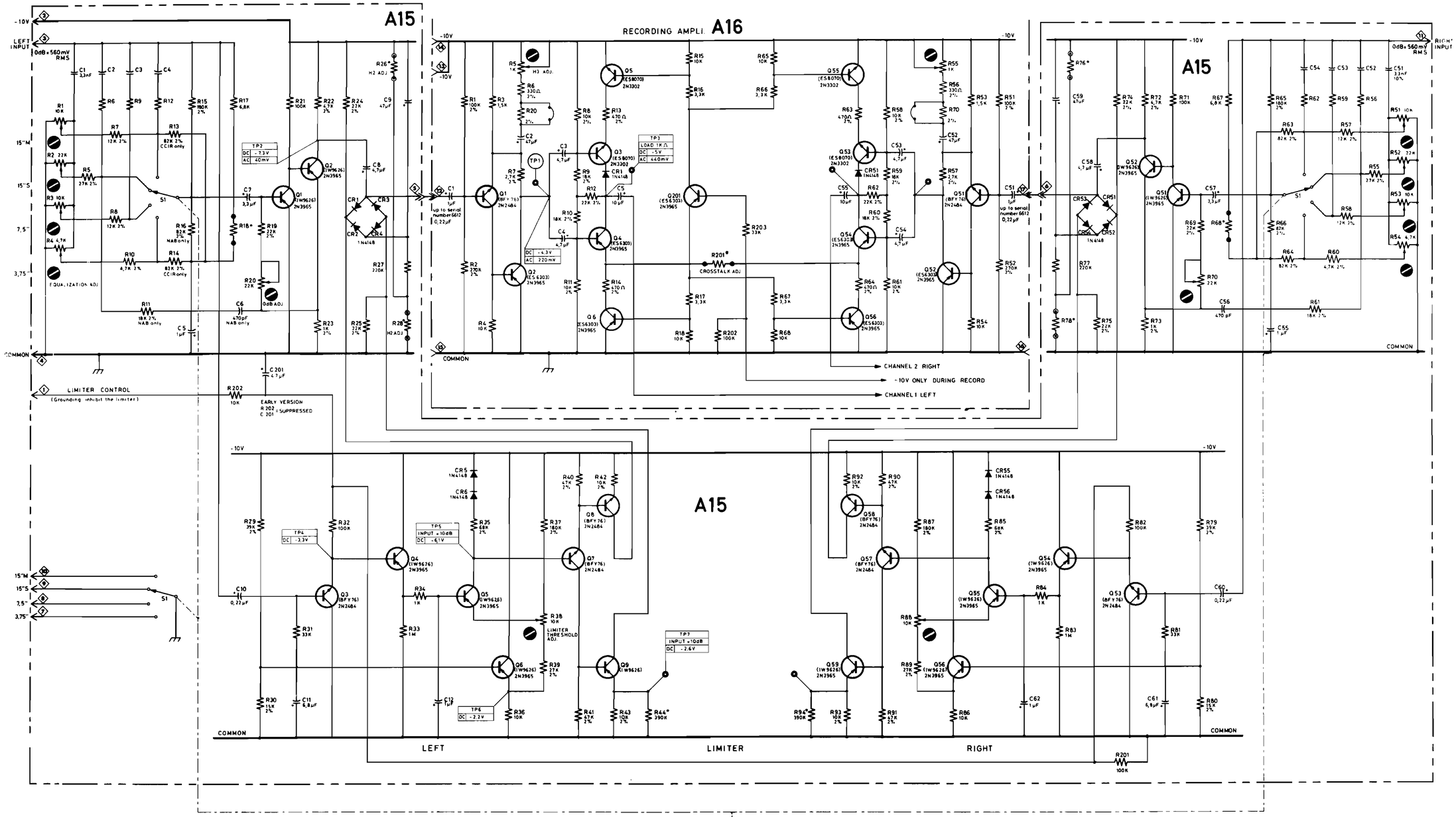

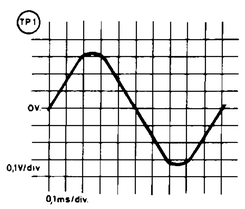

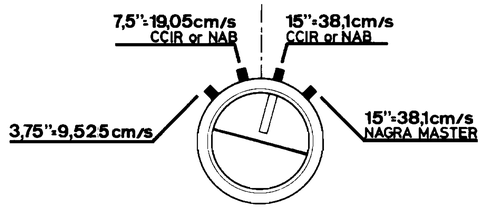

UNLESS SPECIFIED
ALL RESISTORS ALLEN-BRADLEY 1/4W ± 10 %
ALL CAPACITORS ± 20 %

MEASURING INSTRUMENT
D.C. Voltmeter 40 000 Ω/V
A.C. Voltmeter
(e.g. Brüel & Kjaer type 2112 or 2606 + 1615 or equivalent)
A.C. Measurement should be made at 1KHz
Voltages may vary ± 10 %

KUDELSKI S.A. Dept. NAGRA CH-1033 CHESEAUX Switzerland	This drawing is confidential and may not be divulged in whole or in part to a third party	NAGRA MAGNETIC RECORDERS INC 19 West 44th Street NEW YORK, N.Y. 10 036
NAGRA IV-S	09.06.810.0.00	27.8.71
RECORDING AMPLIFIER		

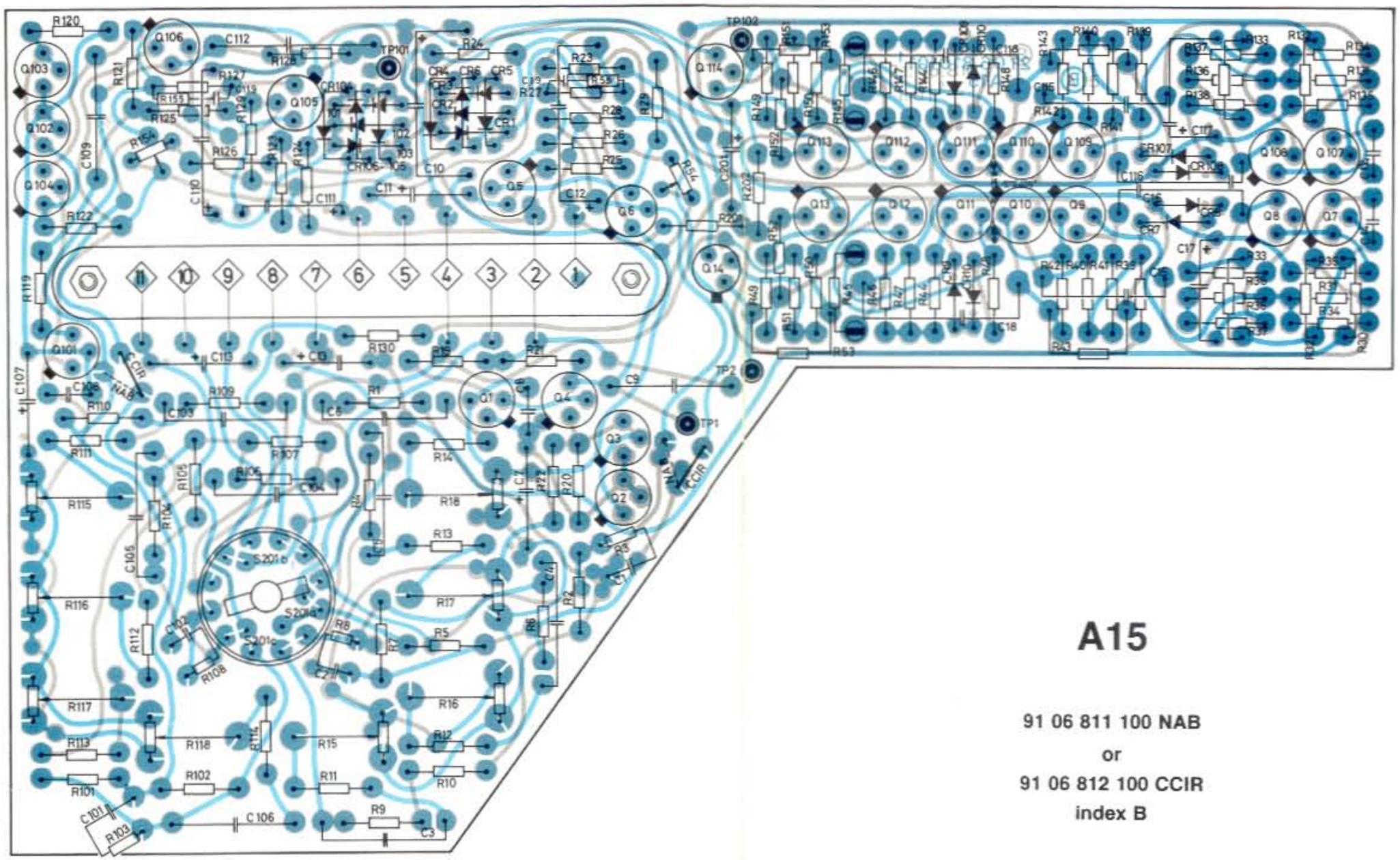

A15

91 06 811 100 NAB
or
91 06 812 100 CCIR
index B

NAGRA IV-S
RECORDING PREAMPLIFIER WITH
CONTROLLED PRE-EMPHASIS

Modification CCIR for 510nWb/m
at 7.5 ips
R 6 and 106 = 680k
For 510nWb/m at 4.75 ips
R9 and 109 = 180k
R10 and 110 = 220k

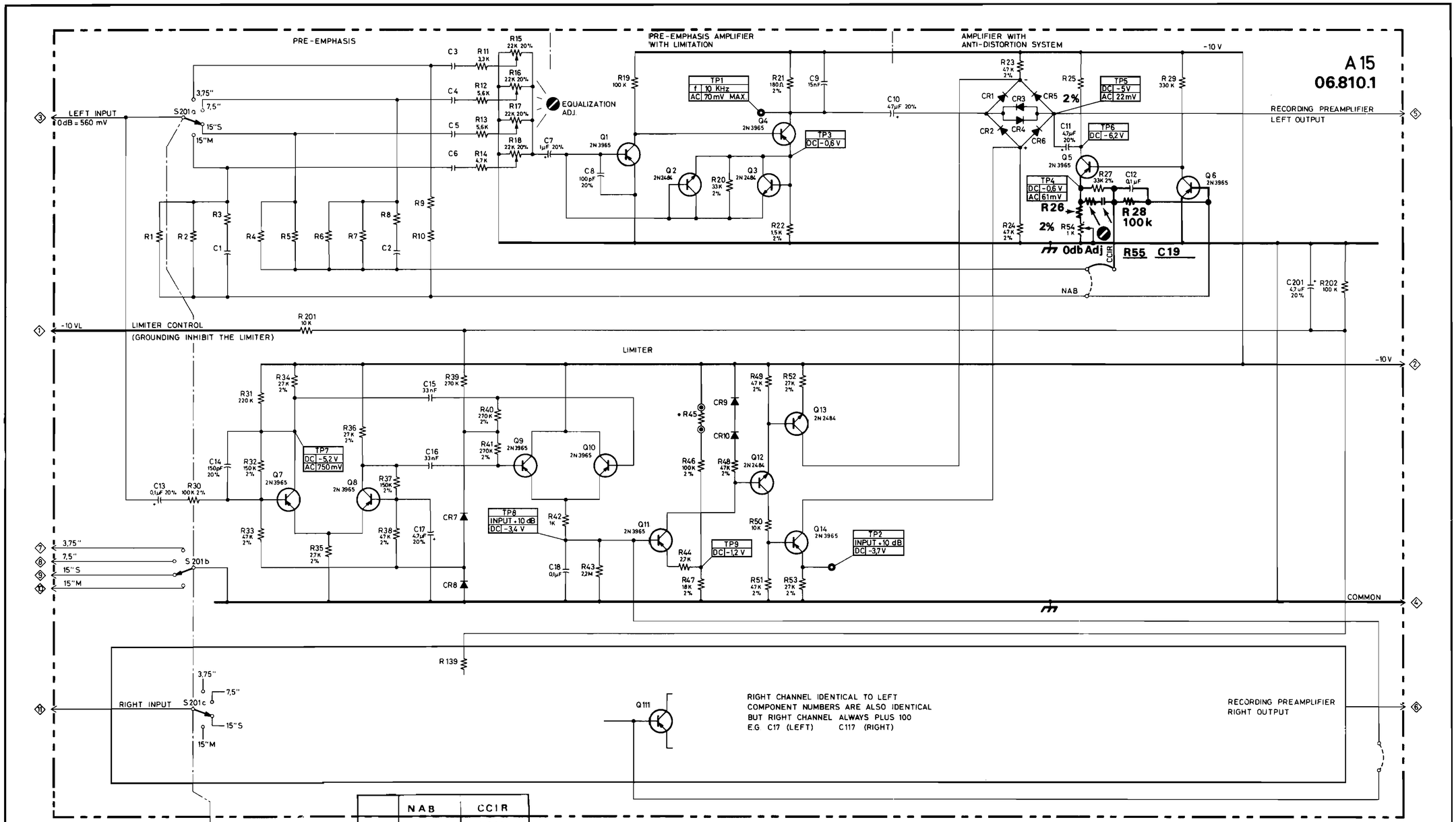

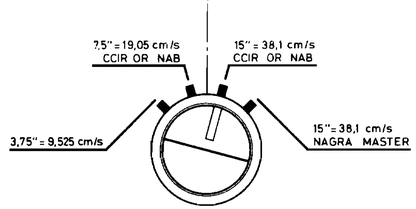

	NAB	CCIR
R1	3,3M	1,5 M
R2	220 k	220k
R3	150 k	
R4	470 k	2,2 M
R5	220 k	220 k
R6	1,5 M	4,7 M
R7	220 k	270 k
R8	1 M	
R9	220k	270k
R10	22 k	47 k
R25	15 k	22 k
R26	2,2 k	3,3 k
R55	33 k	
C1	120 pF	
C2	120 pF	
C3	1 nF	1,2 nF
C4	470 pF	470pF
C5	100 pF	330 pF
C6	470 pF	820pF
C19	470 pF	

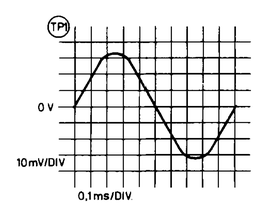

NOTE NAB 91 06 811 100
CCIR 91 06 812 100
(ci nu 21 06 810 101)

UNLESS SPECIFIED
ALL RESISTORS ALLEN BRADLEY 1/4W ±10%
ALL CAPACITORS ± 10%
ALL DIODES 1N 4148

ALL CONNECTORS OR PLUGS VIEWED
FROM THE OUTSIDE

MEASURING INSTRUMENT
DC VOLTMETER 40 000 Ω/V
AC VOLTMETER
(E.G. B & K TYPE 2112 OR 1615
OR EQUIVALENT)
UNLESS SPECIFIED
AC MEASUREMENT SHOULD BE MADE AT 1KHz FOR 0 dB LEVEL
VOLTAGES MAY VARY ± 10%

WITH BRIDGE = LIMITERS COUPLED
WITHOUT BRIDGE = LIMITERS SEPARATE

1.88.	OME 06-001, 06-022, 27

B

KUDELSKI S.A. Dept. NAGRA
CH - 1033 CHESEAUX
Switzerland

NAGRA MAGNETIC RECORDERS INC.
NEW YORK, N.Y. 10036
19 West 44 th. Street

NAGRA IV-S	09.06.810.100	2.6.76

A15

RECORDING PREAMPLIFIER
WITH CONTROLED PRE-EMPHASIS

This drawing is confidential and may not be divulged in whole or in part to a third party.

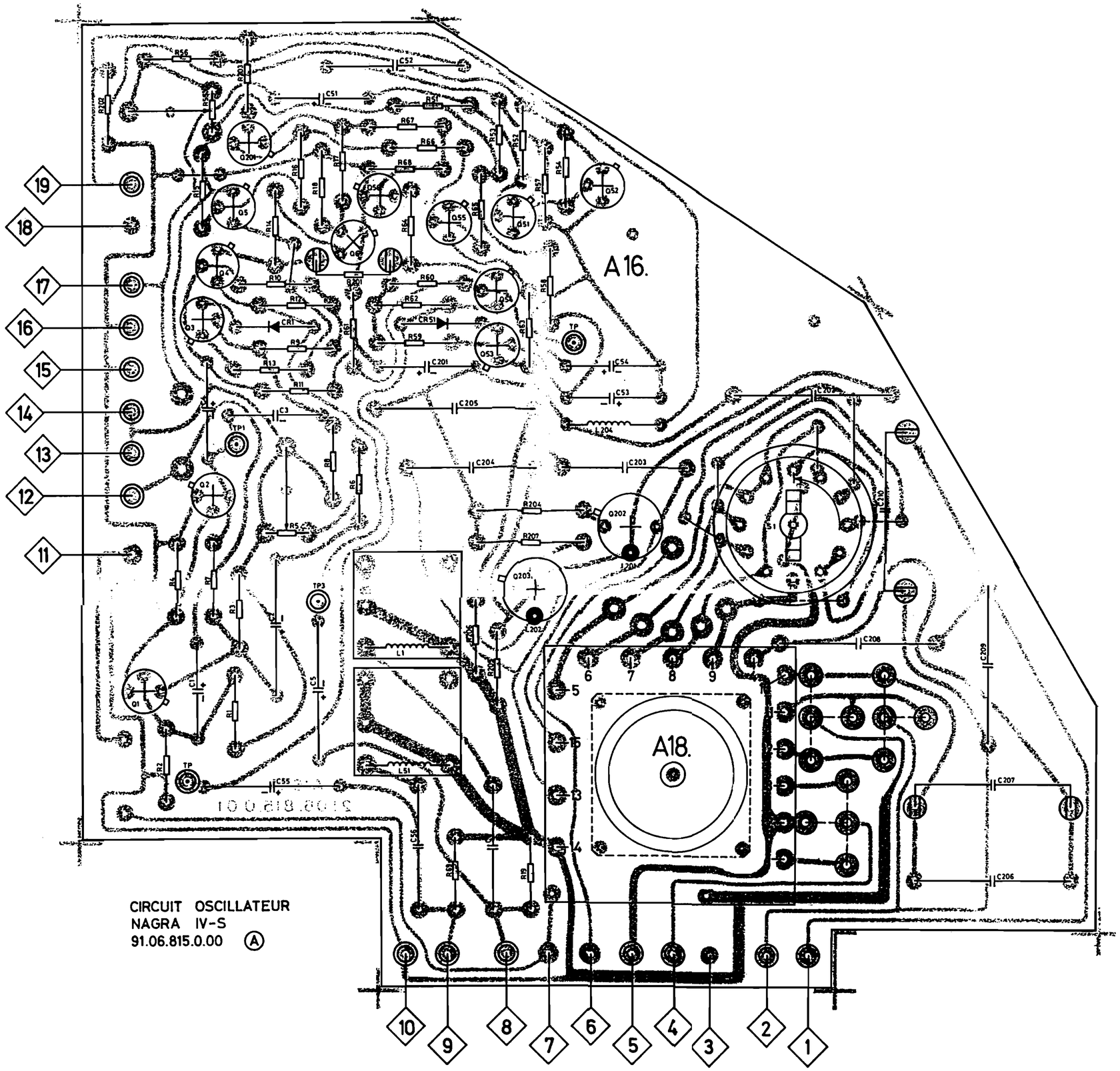
A16.
A18.
CIRCUIT OSCILLATEUR
NAGRA IV-S
91.06.815.0.00 Ⓐ

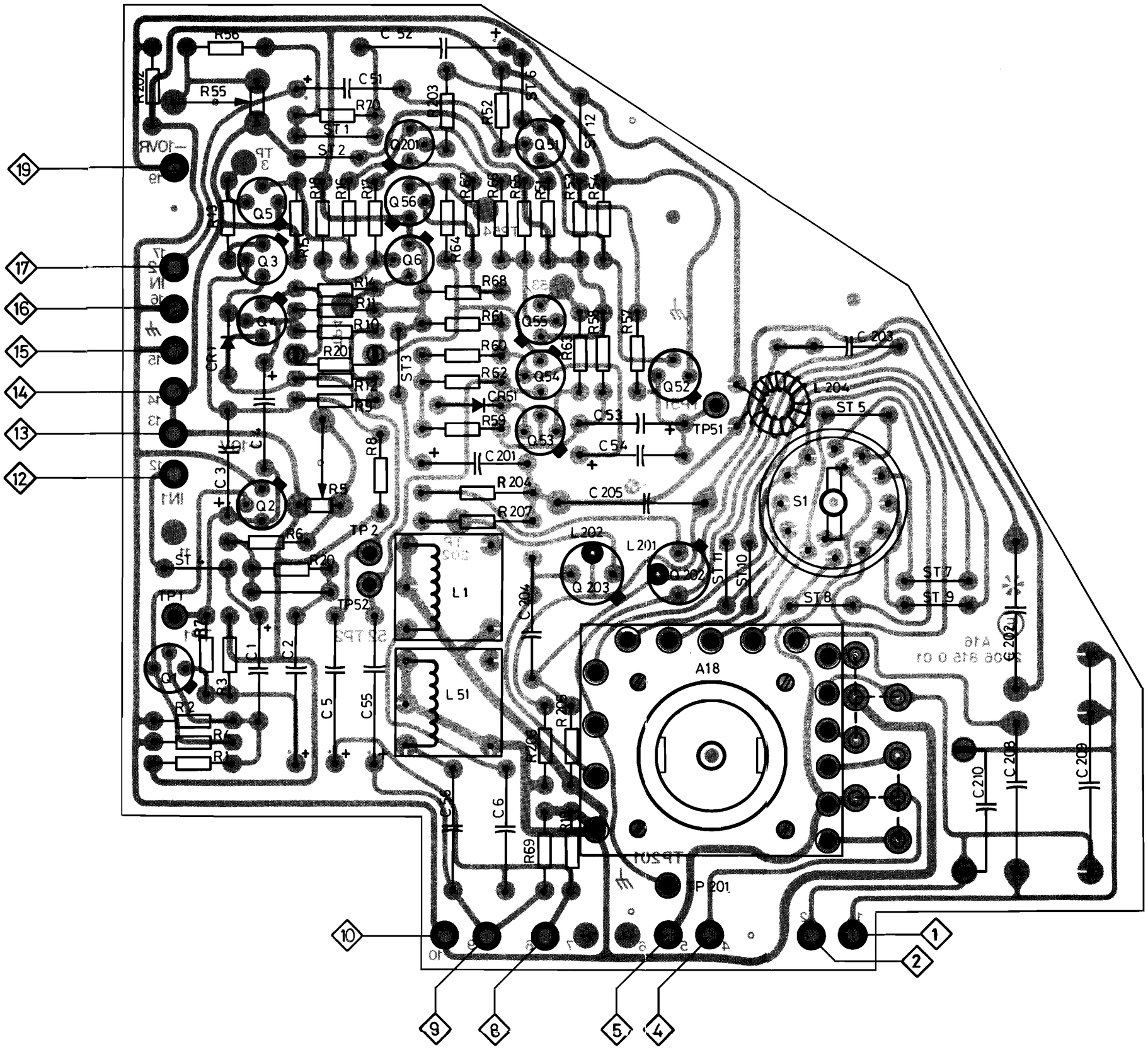

A16

91 06 815 000

index E

NAGRA IV-S

RECORDING AMPLIFIER & BIAS OSCILLATOR

DATE	MODIFICATIONS
1.88	Revision

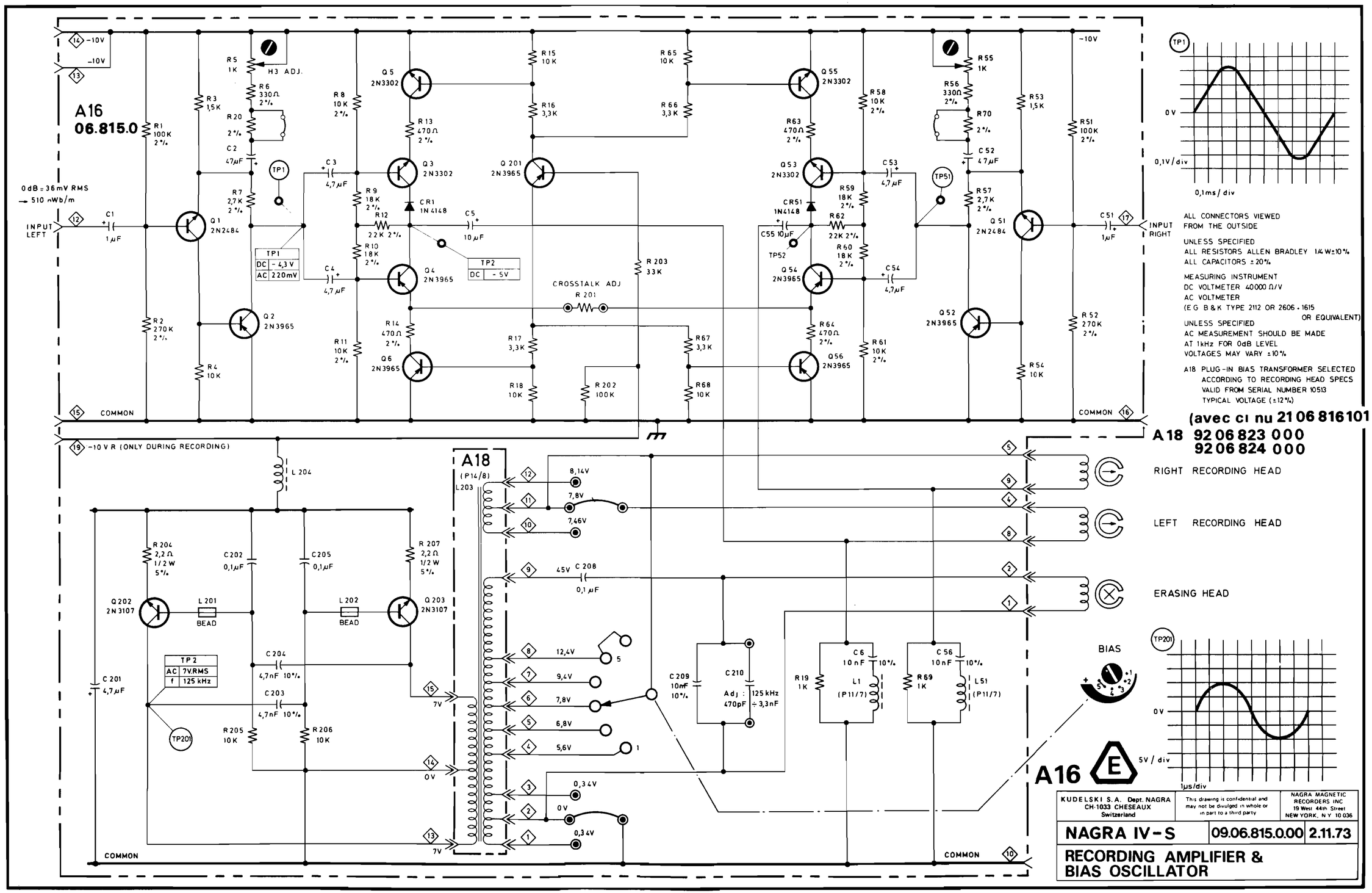

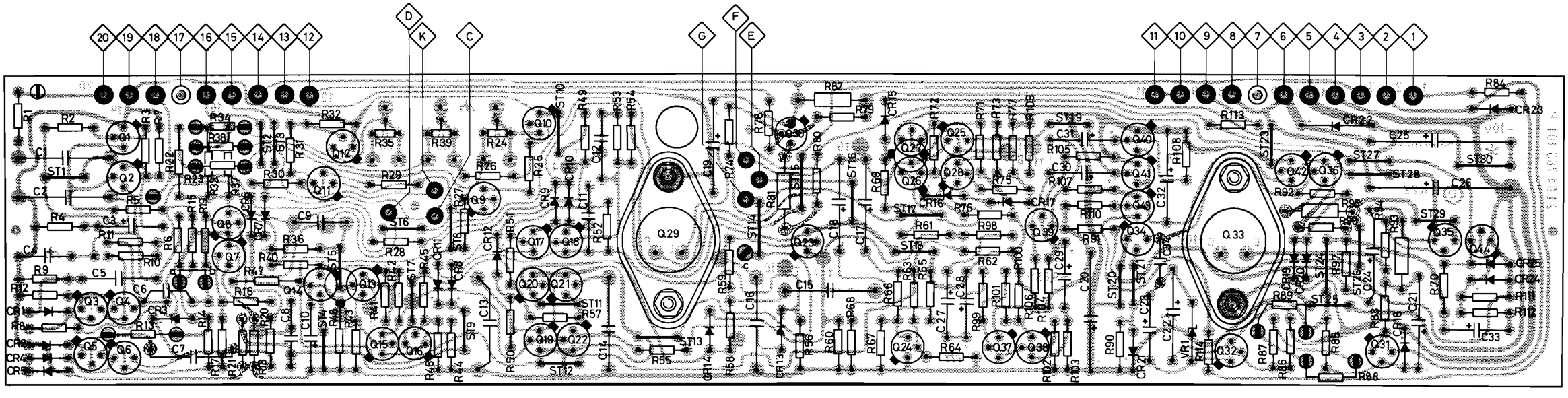

A22

91 04 765 100

Index E

NAGRA IV-S

VOLTAGE & SPEED STABILIZER

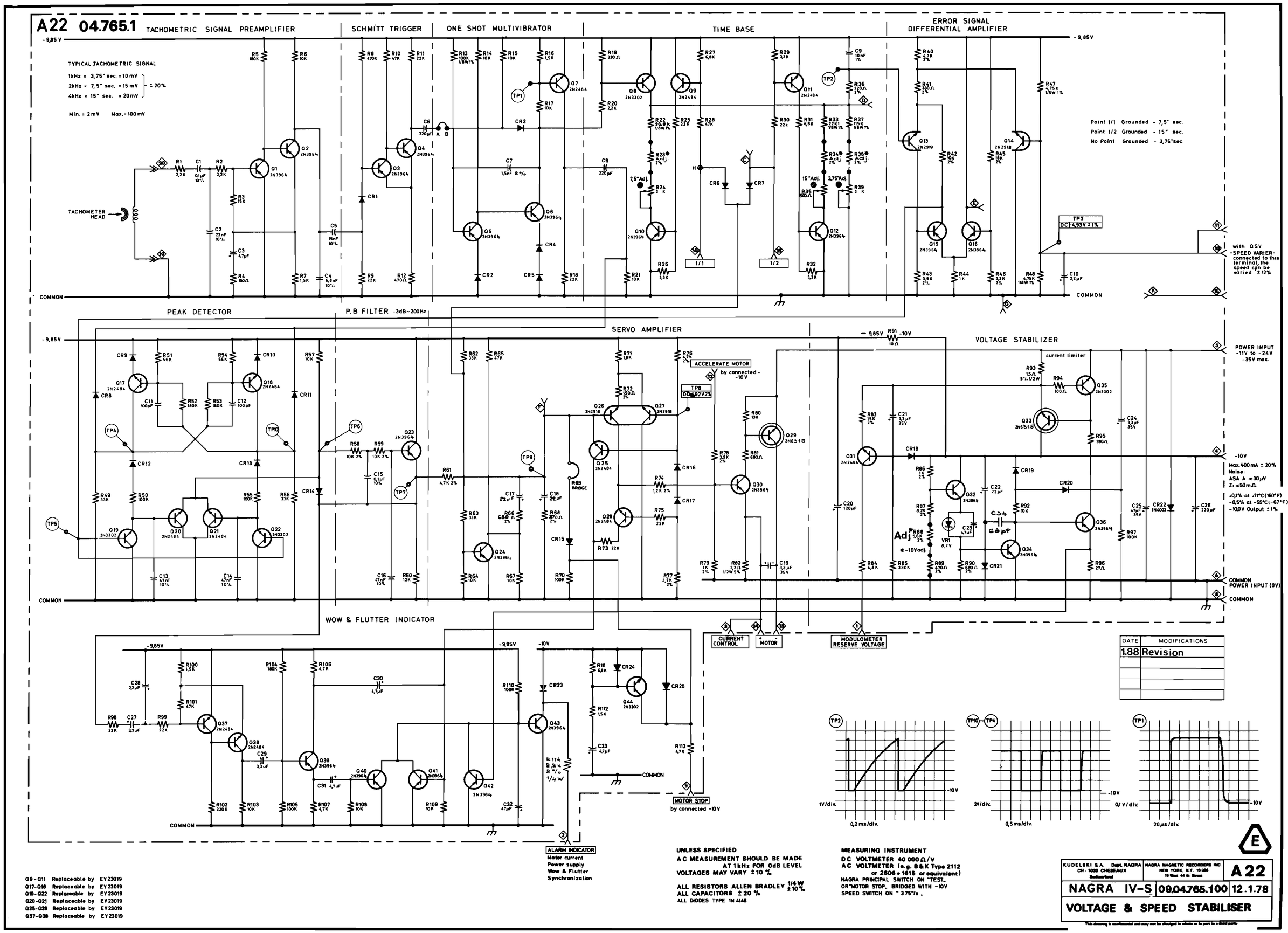

Q9-Q11 Replaceable by EY23019
Q17-Q18 Replaceable by EY23019
Q19-Q22 Replaceable by EY23019
Q20-Q21 Replaceable by EY23019
Q25-Q28 Replaceable by EY23019
Q37-Q38 Replaceable by EY23019

UNLESS SPECIFIED
AC MEASUREMENT SHOULD BE MADE AT 1kHz FOR 0dB LEVEL
VOLTAGES MAY VARY ± 10 %

ALL RESISTORS ALLEN BRADLEY 1/4 W ± 10 %
ALL CAPACITORS ± 20 %
ALL DIODES TYPE 1N 4148

MEASURING INSTRUMENT
DC VOLTMETER 40 000 Ω/V
AC VOLTMETER (e.g. B&K Type 2112 or 2606 + 1615 or equivalent)
NAGRA PRINCIPAL SWITCH ON "TEST" OR "MOTOR STOP" BRIDGED WITH -10V SPEED SWITCH ON "375"/s"

KUDELSKI S.A. Dept. NAGRA CH-1033 CHESEAUX Switzerland	NAGRA MAGNETIC RECORDERS INC. NEW YORK, N.Y. 10036 19 West 44th Street	A22
NAGRA IV-S	09.04.765.100	12.1.78
VOLTAGE & SPEED STABILISER		

This drawing is confidential and may not be divulged in whole or in part to a third party

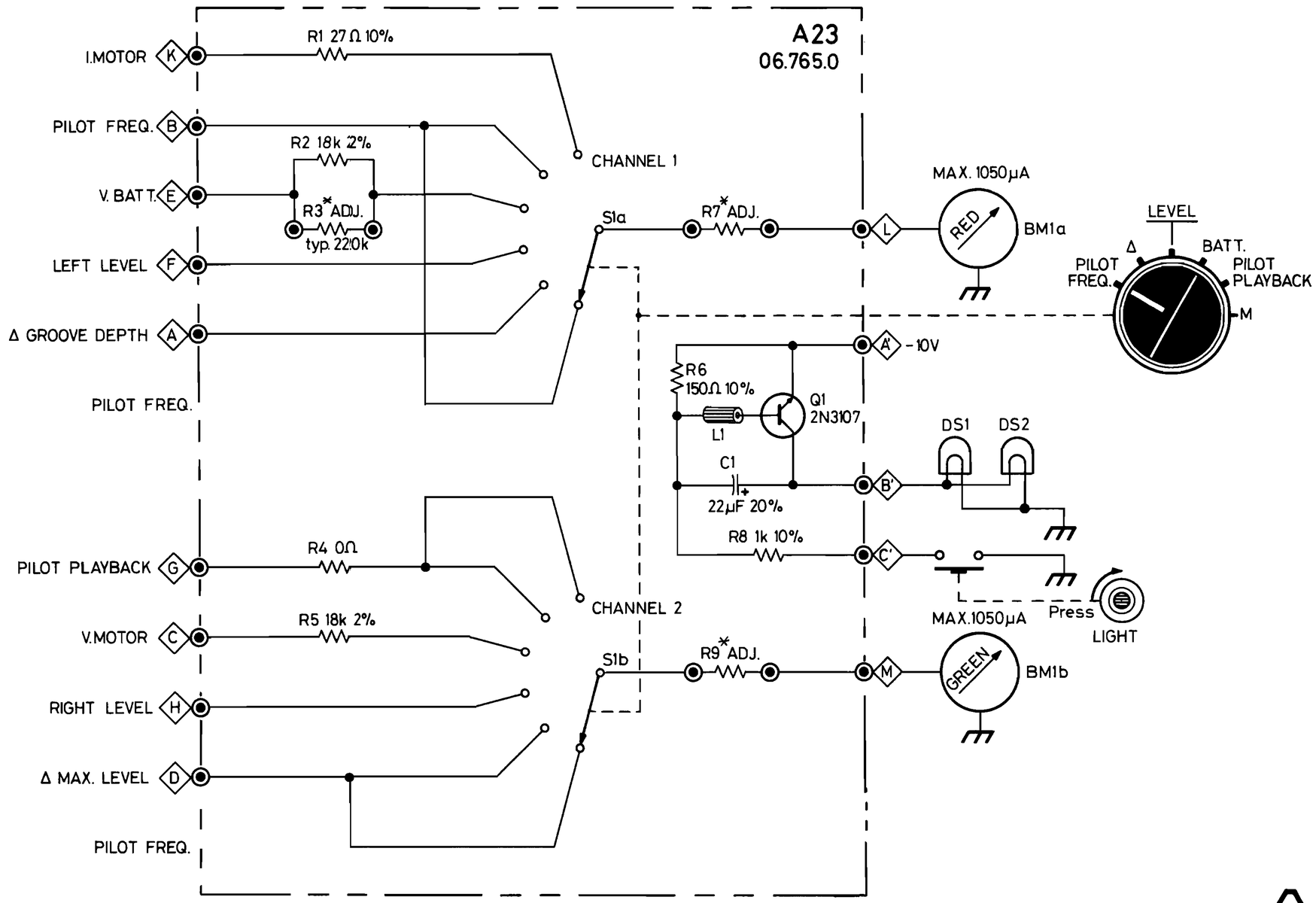

A23

91 06 765 000

index ⊖

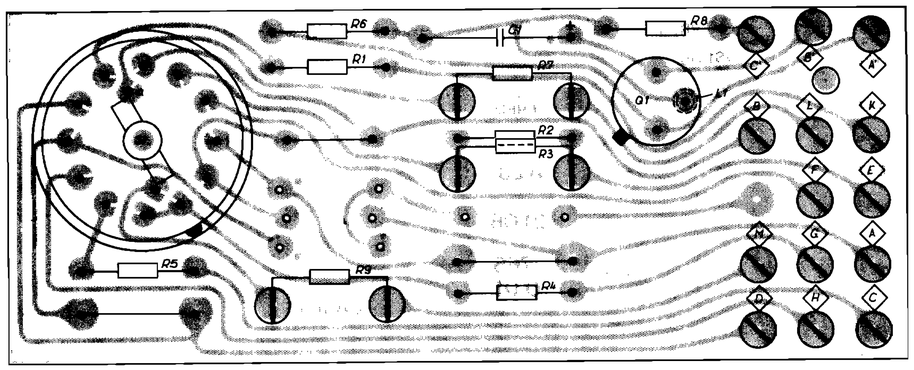

DATE	MODIFICATIONS
1.88	Revision

KUDELSKI S.A. Dept. NAGRA CH - 1033 CHESEAUX Switzerland	NAGRA MAGNETIC RECORDERS INC. NEW YORK, N.Y. 10 036 19 West 44 th Street	**A 23**
NAGRA IV-S	**09.06.765.000**	**8.3.79**
METER SWITCHING LIGHT TEMPORIZER		

This drawing is confidential and may not be divulged in whole or in part to a third party

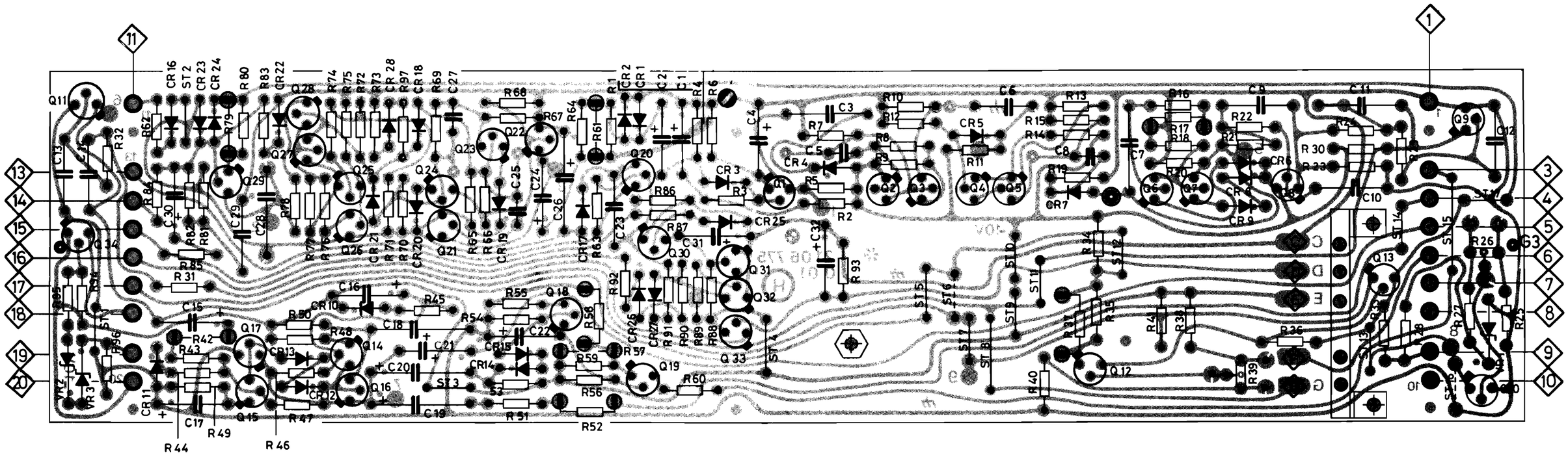

A24

91 06 774 000

index H

NAGRA IV-S

PILOT WITH 0 V DC INPUT & OUTPUT

DATE	MODIFICATIONS
1.88	Revision

A24
06.774.0

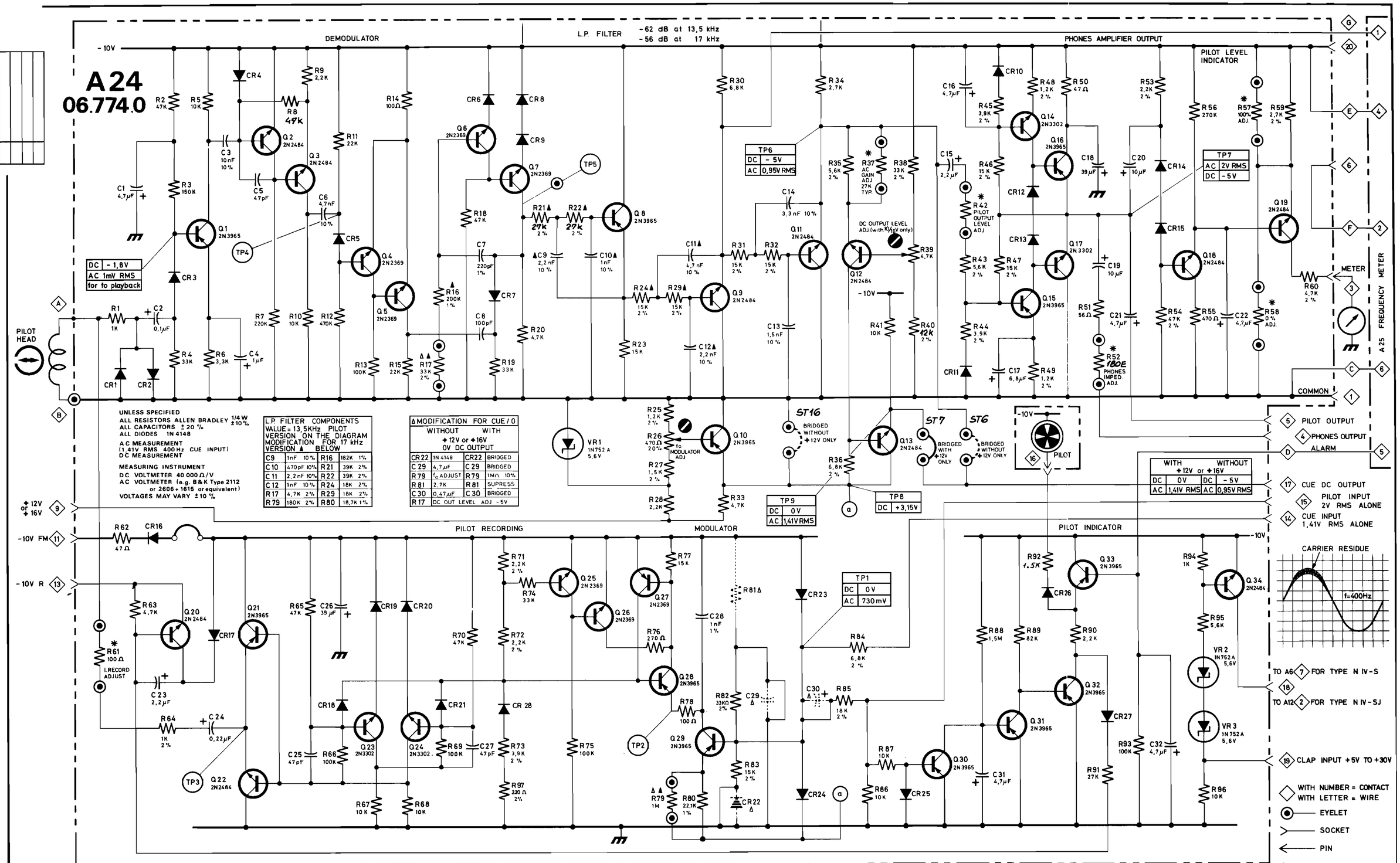

UNLESS SPECIFIED
ALL RESISTORS ALLEN BRADLEY 1/4 W ±10%
ALL CAPACITORS ± 20 %
ALL DIODES 1N 4148

A C MEASUREMENT
(1,41V RMS 400 Hz CUE INPUT)
D C MEASUREMENT

MEASURING INSTRUMENT
D C VOLTMETER 40 000 Ω/V
A C VOLTMETER (e.g. B&K Type 2112 or 2606 + 1615 or equivalent)
VOLTAGES MAY VARY ± 10 %

L.P. FILTER COMPONENTS VALUE = 13,5KHz PILOT VERSION ON THE DIAGRAM MODIFICATION FOR 17 kHz VERSION ▲ BELOW			
C9	1nF 10 %	R16	182K 1 %
C10	470pF 10 %	R21	39K 2 %
C11	2,2nF 10 %	R22	39K 2 %
C12	1nF 10 %	R24	18K 2 %
R17	4,7K 2 %	R29	18K 2 %
R79	180K 2 %	R80	18,7K 1 %

Δ MODIFICATION FOR CUE / 0 WITHOUT + 12V or + 16V 0V DC OUTPUT		WITH	
CR22	1N 4148	CR22	BRIDGED
C 29	4,7 µF	C 29	BRIDGED
R 79	f_0 ADJUST	R 79	1MΩ 10 %
R 81	2,7K	R 81	SUPRESS
C 30	0,47 µF	C 30	BRIDGED
R 17	DC OUT LEVEL ADJ -5V		

Modulator and Demodulator Adjusments

Remark: all adjustments with modulator ON obtained by connecting -10 FM to -10 G on the Cue receptacle.

Adjustments 0V Cue DC output (+12 or +16V Q.SJC supplied)

1. Adjust modulator frequency f_0 at 17 or 13,5 kHz ± 0,5% with R 26, without signal at input terminals.
2. Adjust demodulator output level with R 37 at 1,41 VRMS ± 0,5 dB for $\frac{\Delta f}{f_0}$ = ± 40% (1,41 VRMS 400 Hz on Cue input).
3. Without input signal, adjust R 39 for 0V DC Cue output

Warning: demodulator DC output level depends on f_0 adjustment (R 26).

Adjustments without 0V Cue DC output (without Q.SJC)

1. Adjust modulator frequency f_0 at 17 or 13,5 kHz ± 1% with R79
2. Adjust Cue DC output for -5V ± 0,1V with R17 without input signal
3. Check demodulator output level of 0,95 VRMS ± 1 dB for $\frac{\Delta f}{f_0}$ = ± 40% (1,41 VRMS 400 Hz on Cue input).

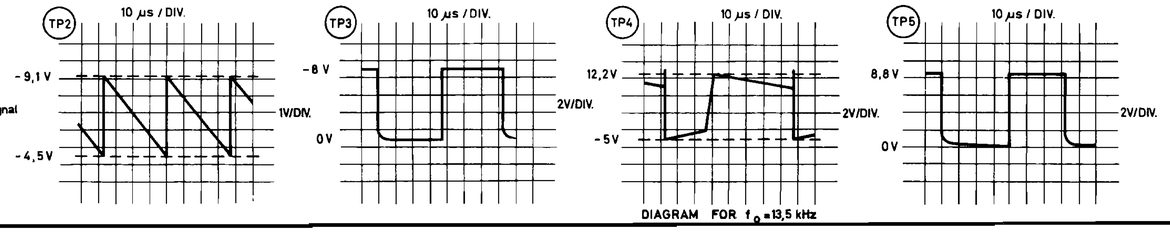

DIAGRAM FOR f_0 = 13,5 kHz

91 06 774 000
(ci nu 2106 775 001)

H

KUDELSKI S.A. Dept. NAGRA CH-1033 CHESEAUX Switzerland
NAGRA MAGNETIC RECORDERS INC. NEW YORK, N.Y. 10036 19 West 44 th Street

NAGRA IV-S/SJ	09.06.775.000	24.11.76

A 24

PILOT WITH 0V DC INPUT AND OUTPUT

This drawing is confidential and may not be divulged in whole or in part to a third party

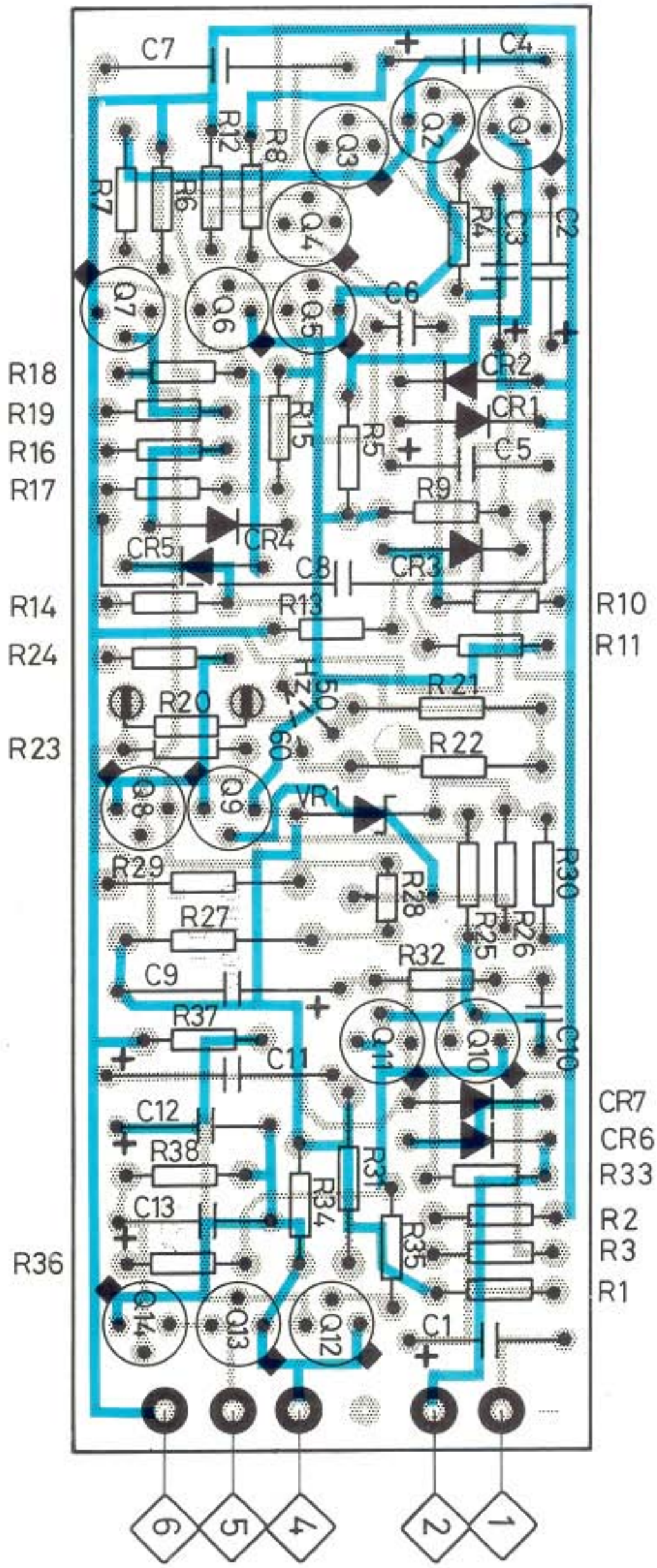

A25

91 06 780 100

index B

NAGRA IV-S

FREQUENCY METER

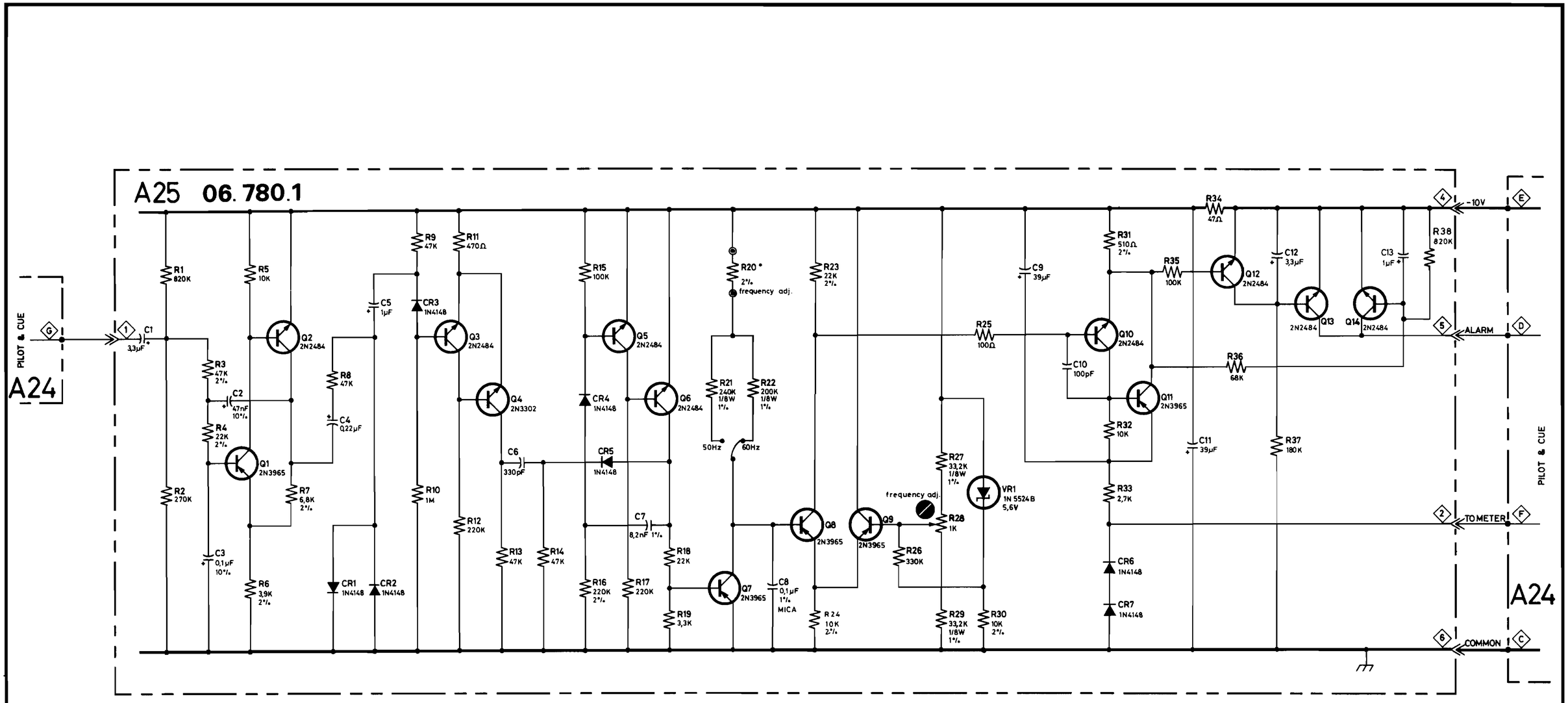

MEASURING INSTRUMENT
D.C. Voltmeter 40'000 Ω / V
A.C. Voltmeter (e.g. Bruël & Kjaer type 2112
or 2606 + 1615 or equivalent)
Voltages may vary ± 10%

UNLESS SPECIFIED
ALL RESISTORS ALLEN-BRADLEY 1/4 W ± 10 %
ALL CAPACITORS ± 20%

B

DATE	MODIFICATIONS
1.88	Revision

KUDELSKI S.A. Dept. NAGRA CH - 1033 CHESEAUX Switzerland	NAGRA MAGNETIC RECORDERS INC. NEW YORK, N.Y. 10 036 19 West 44 th Street	A 25
NAGRA IV-S	09.06.780.000	26.5.76
FREQUENCY METER		

This drawing is confidential and may not be divulged in whole or in part to a third party

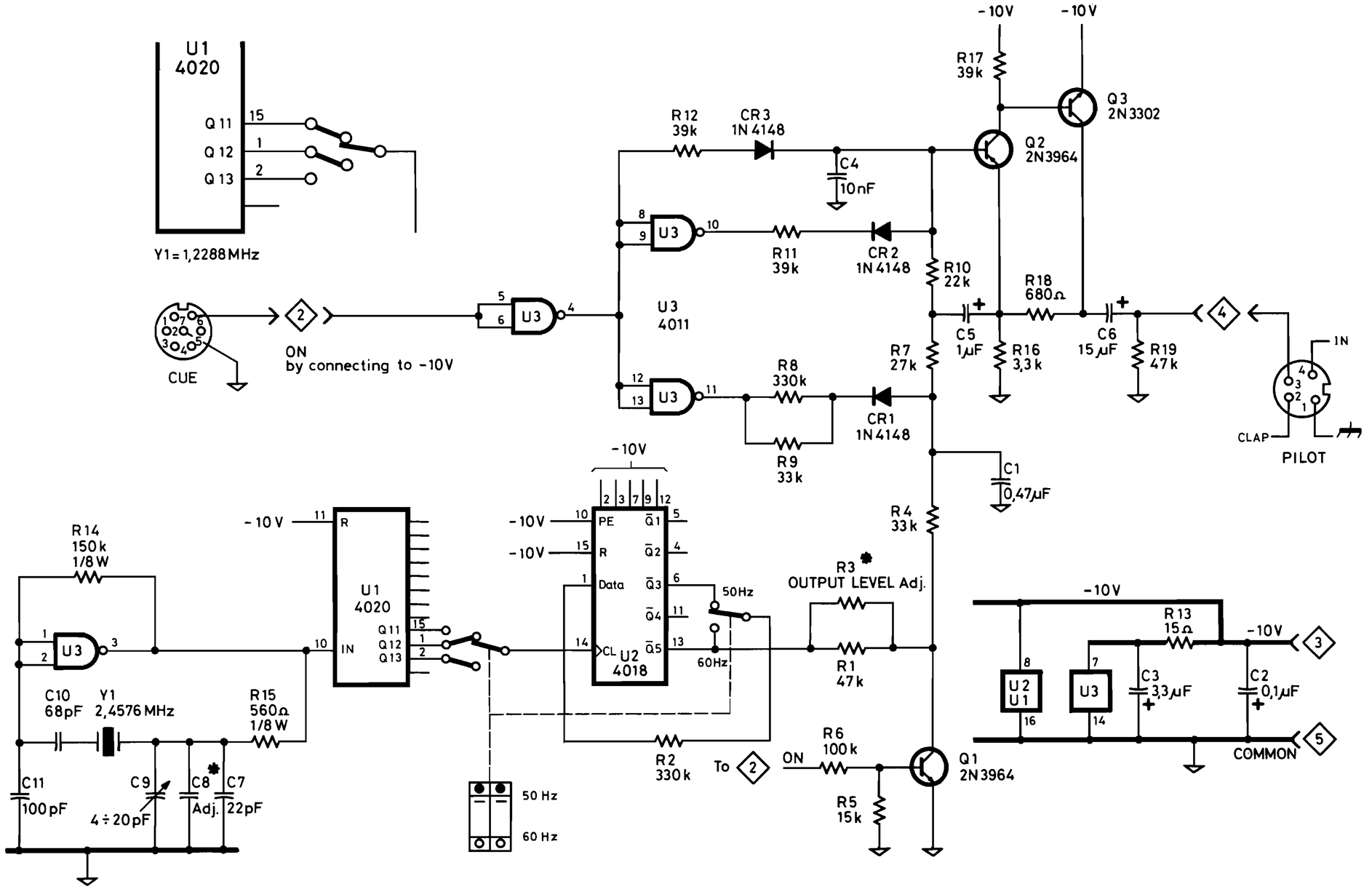

A26

91 06 697 000

Index B

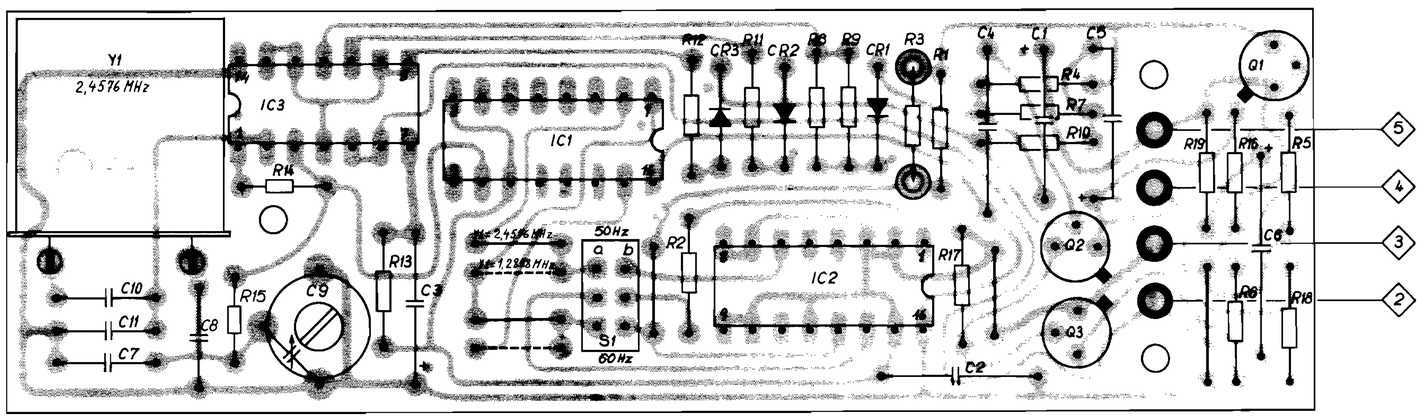

DATE	MODIFICATIONS
3.88	REVISION

B

KUDELSKI S.A. Dept. NAGRA CH 1033 CHESEAUX Switzerland	NAGRA MAGNETIC RECORDERS INC NEW YORK N Y 10 036 19 West 44 th Street	A 26
NAGRA IV - S	09 06 697 000	29.4.83.
CRYSTAL GENERATOR		

This drawing is confidential and may not be divulged in whole or in part to a third party

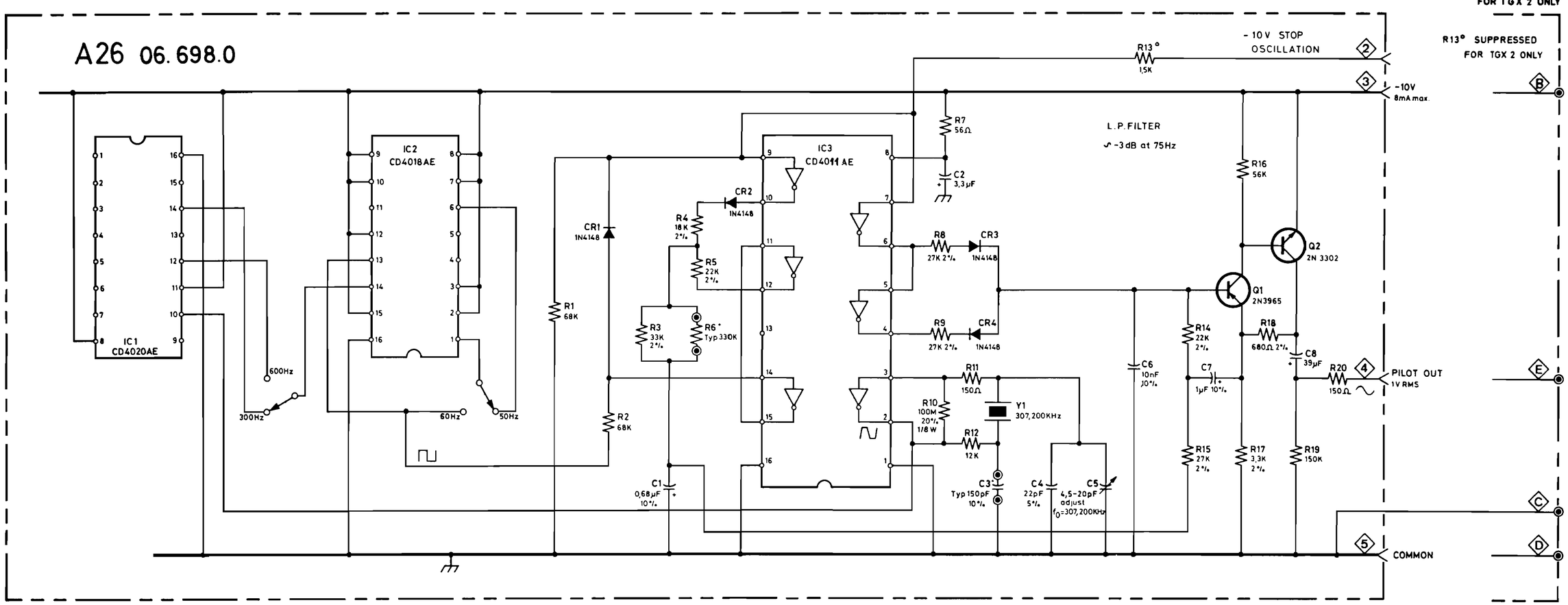

A26

91 06 698 000

index A

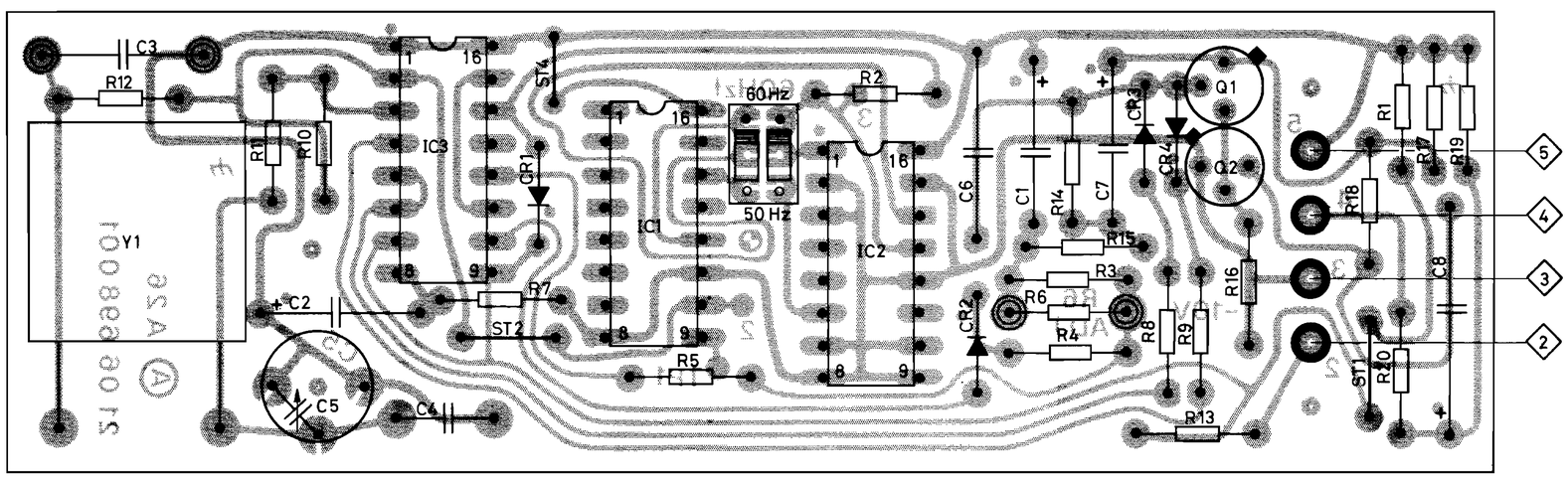

DATE	MODIFICATIONS

KUDELSKI S.A. Dept. NAGRA CH-1033 CHESEAUX Switzerland	NAGRA MAGNETIC RECORDERS INC. NEW YORK, N.Y. 10036 19 West 44 th Street	A 26
NAGRA IV-S	09.06.698.000	25.5.76
CRISTAL SIGNAL GENERATOR		

This drawing is confidential and may not be divulged in whole or in part to a third party

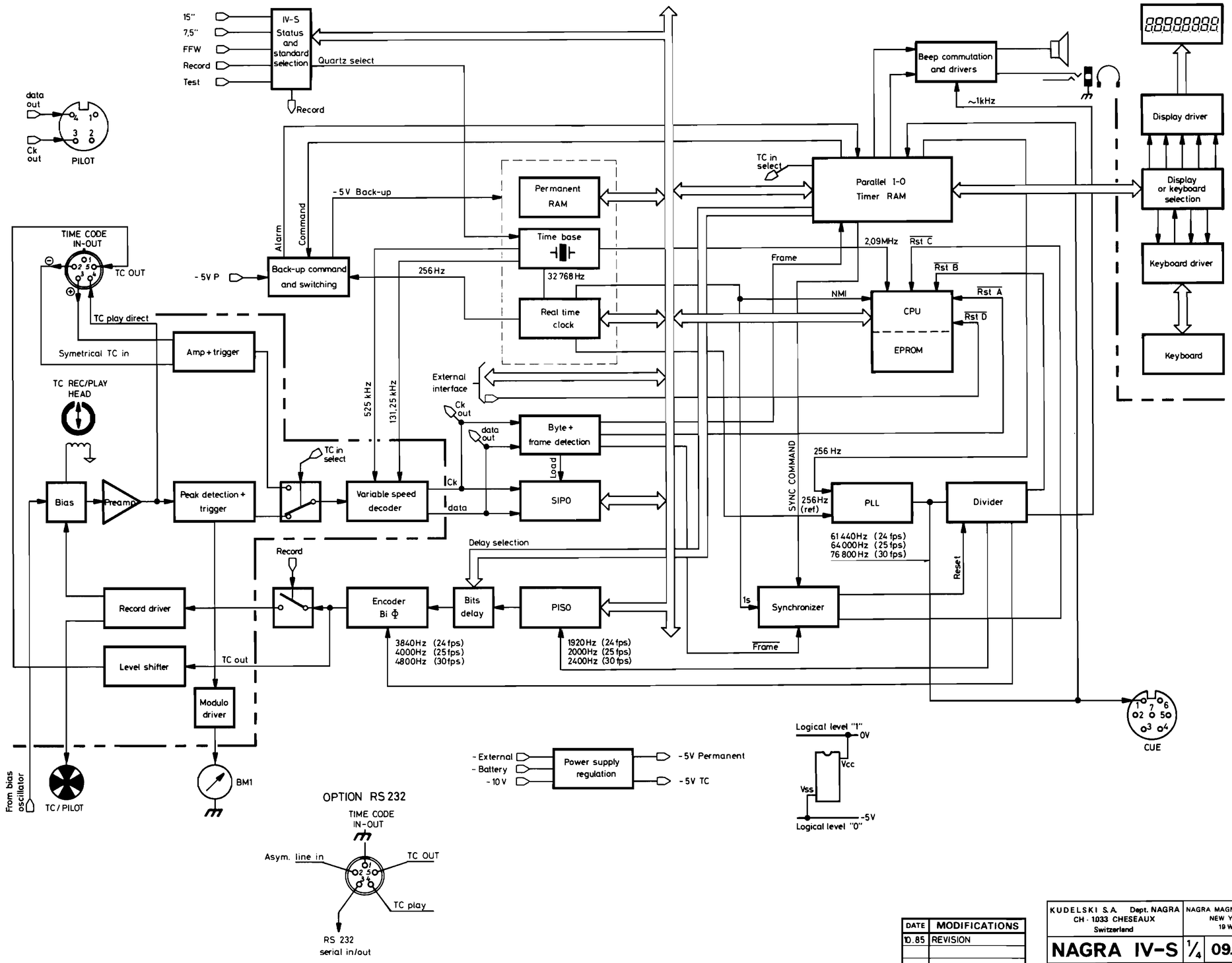

DATE	MODIFICATIONS
10.85	REVISION

KUDELSKI S.A. Dept. NAGRA CH - 1033 CHESEAUX Switzerland	NAGRA MAGNETIC RECORDERS INC. NEW YORK, N.Y. 10 036 19 West 44 th Street	A28
NAGRA IV-S	1/4	09.06.562.0.00	23. 8. 84
TIME CODE BLOCK DIAGRAM		

This drawing is confidential and may not be divulged in whole or in part to a third party

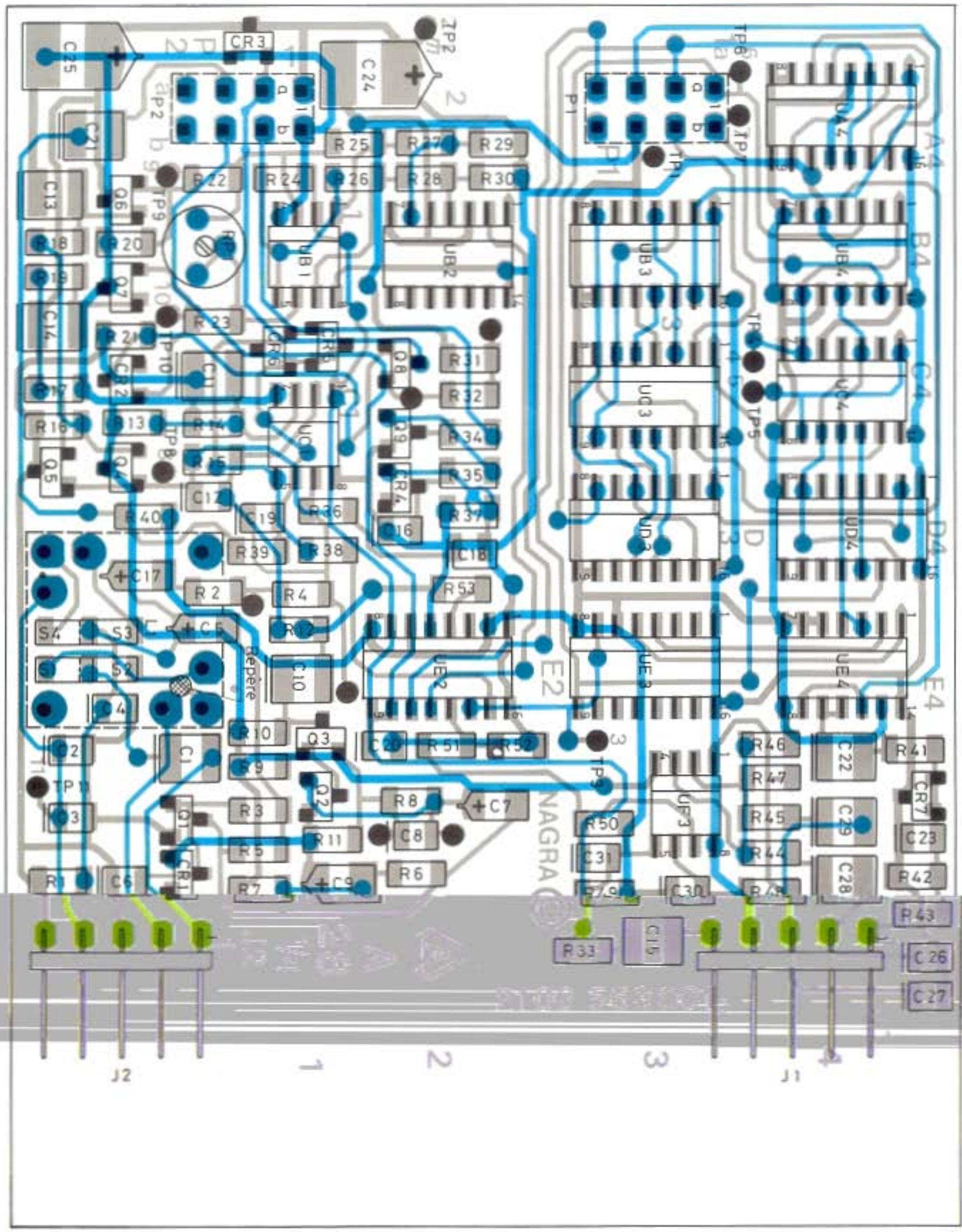

A28 1/4

91 06 563 000

index A

NAGRA IV-S

TIME CODE PLAYBACK-RECORD AND EXTERNAL INPUT-OUTPUT

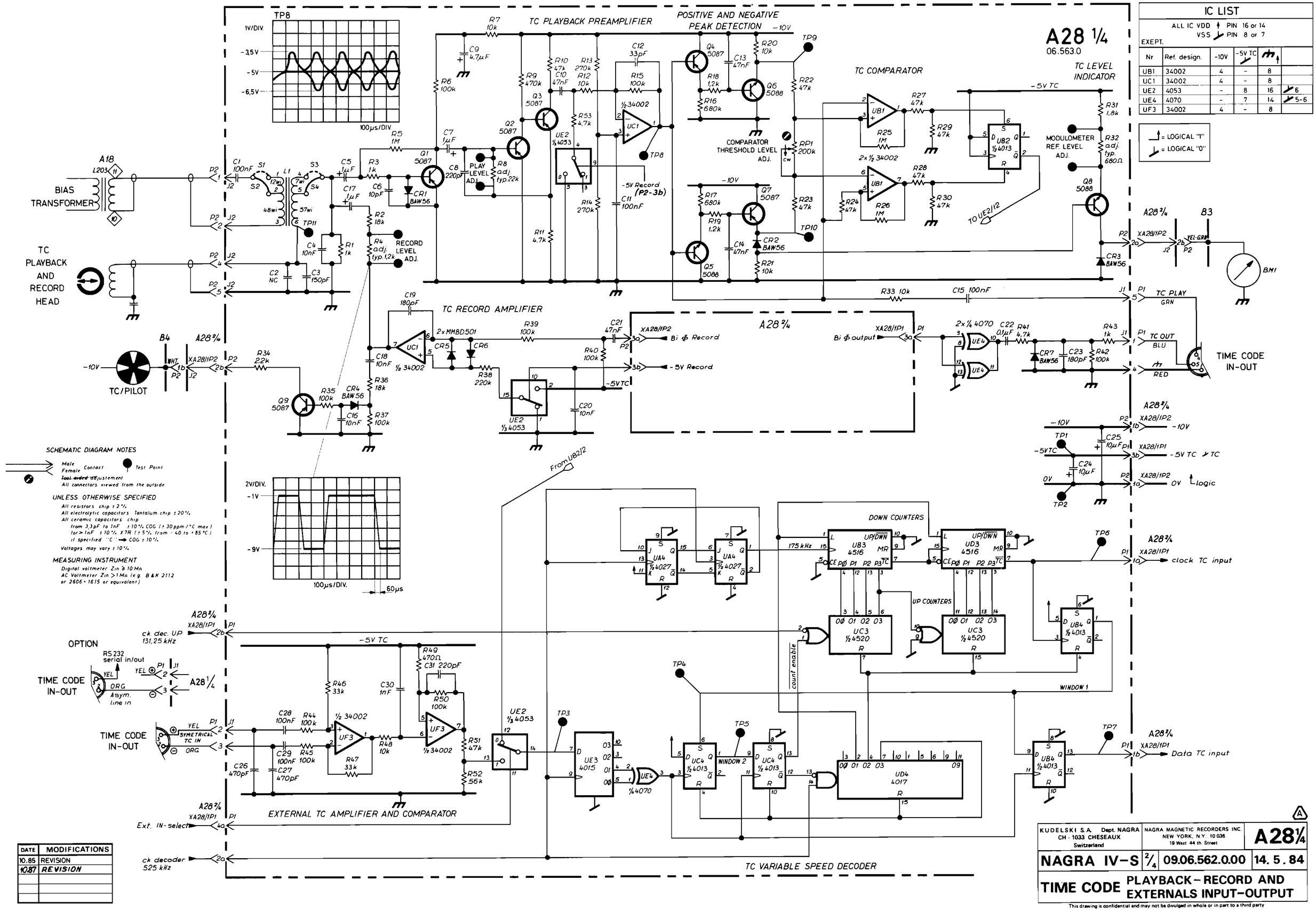

IC LIST

ALL IC VDD ↑ PIN 16 or 14
VSS ↓ PIN 8 or 7
EXEPT.

Nr	Ref. design.	-10V	-5V TC ↓	↑	
UB1	34002	4	-	8	
UC1	34002	4	-	8	
UE2	4053	-	8	16	↓ 6
UE4	4070	-	7	14	↓ 5-6
UF3	34002	4	-	8	

↑ = LOGICAL "1"
↓ = LOGICAL "0"

DATE	MODIFICATIONS
10.85	REVISION
10.87	REVISION

KUDELSKI S.A. Dept. NAGRA
CH - 1033 CHESEAUX
Switzerland

NAGRA MAGNETIC RECORDERS INC.
NEW YORK, N.Y. 10036
19 West 44 th Street

A28 1/4

NAGRA IV-S 2/4 09.06.562.0.00 14. 5. 84

TIME CODE PLAYBACK-RECORD AND EXTERNALS INPUT-OUTPUT

This drawing is confidential and may not be divulged in whole or in part to a third party

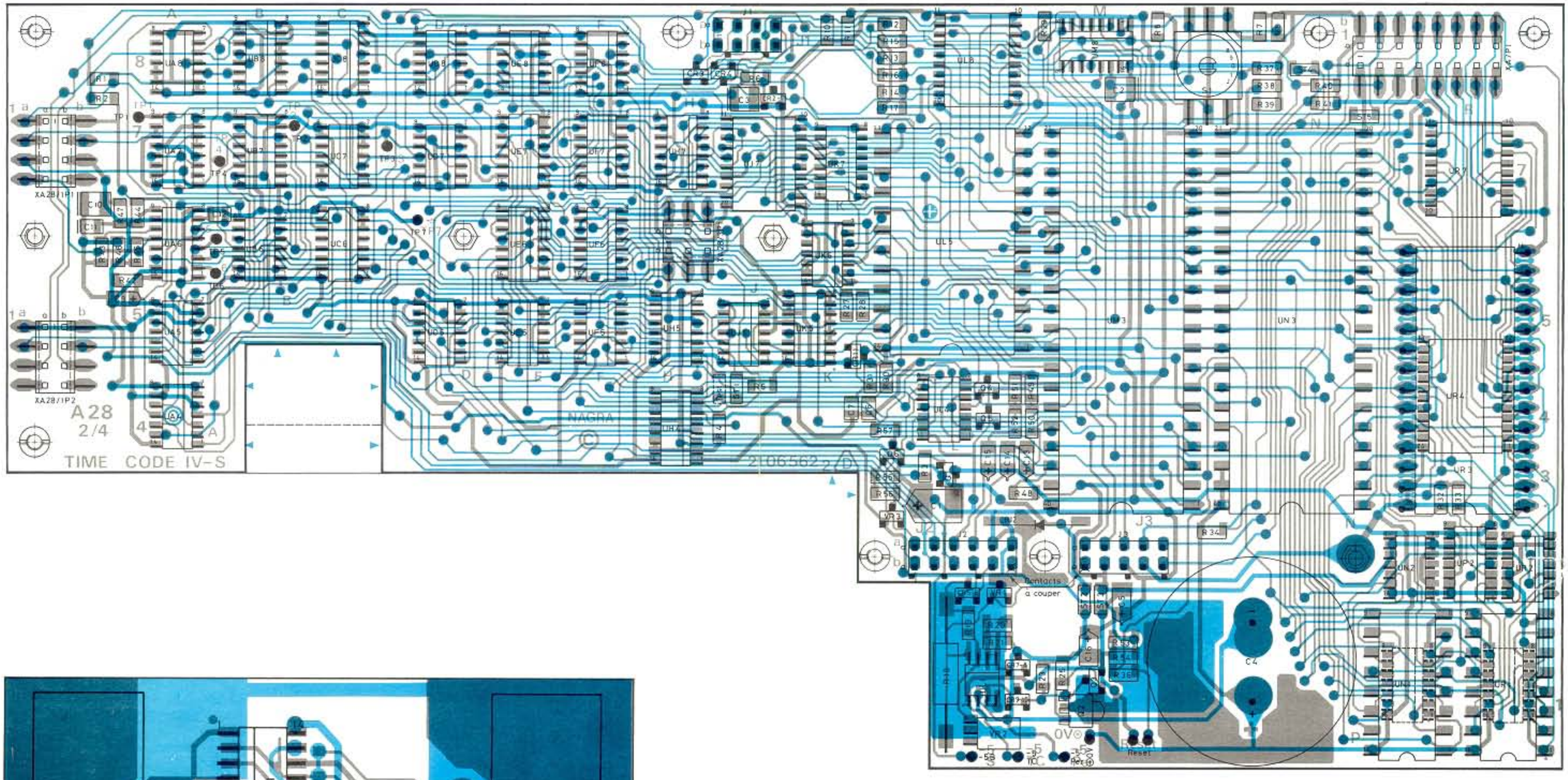

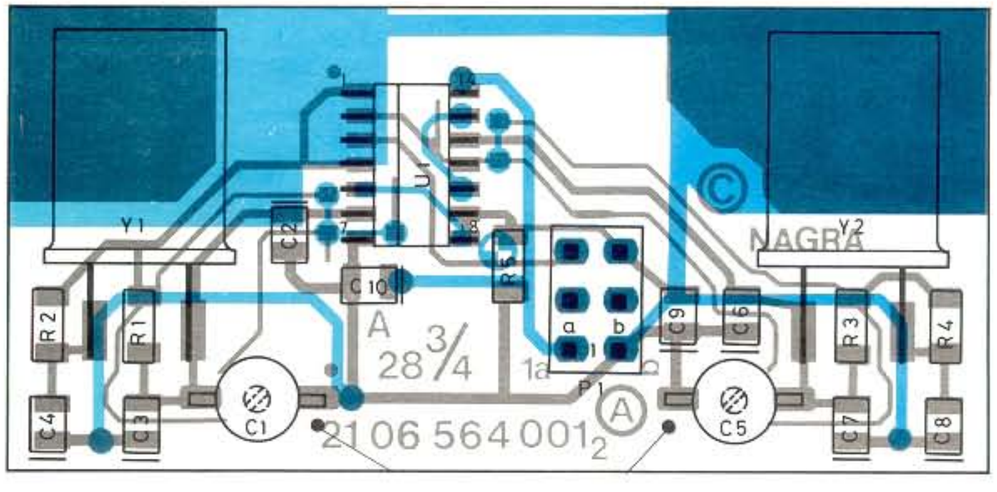

A28 3/4

91 06 564 000

index A

A28 2/4

91 06 562 000

index D

NAGRA IV-S

TIME CODE BACK-UP SWITCHING
POWER REGULATION
OSCILLATOR - TC INPUT

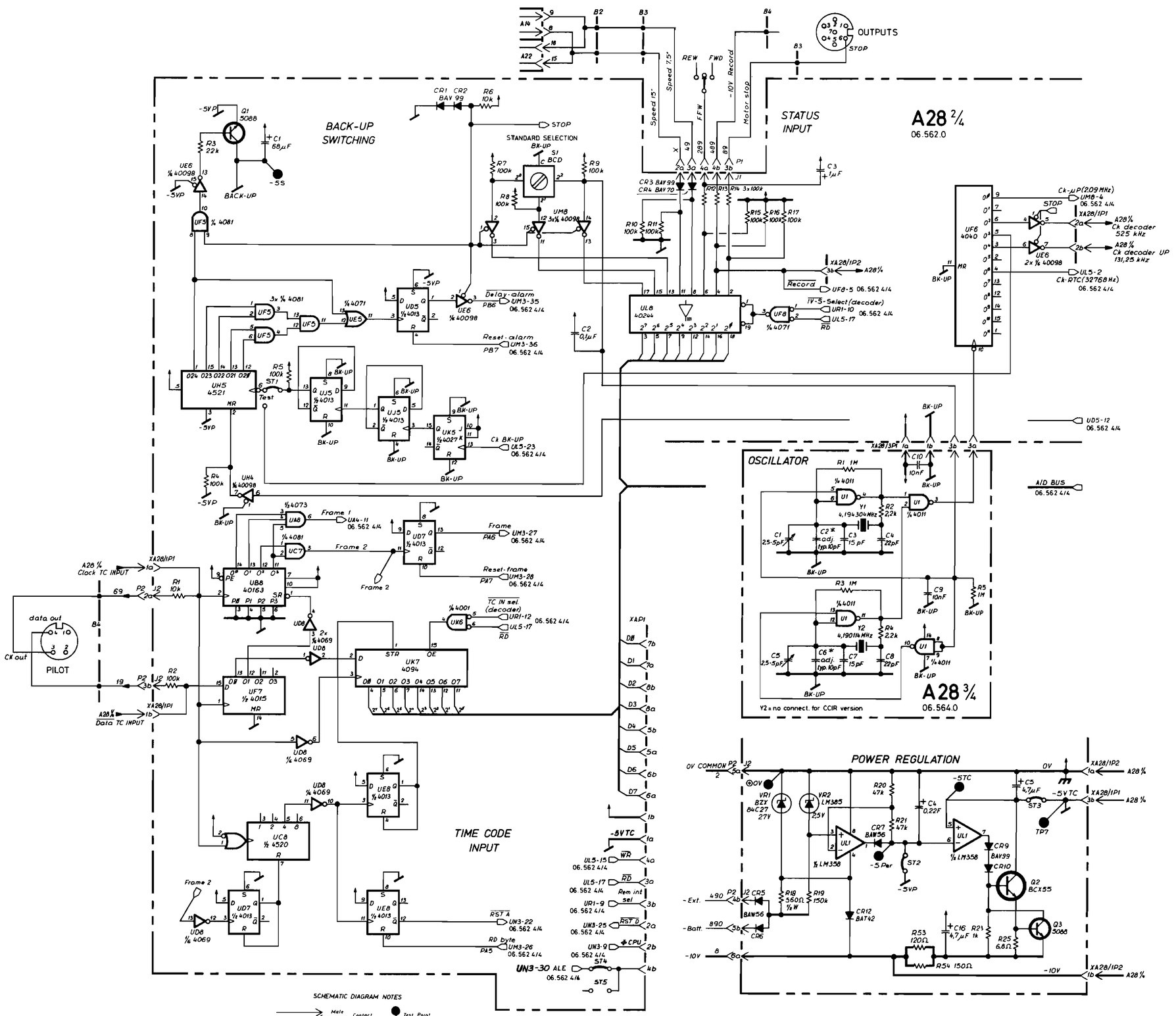

SCHEMATIC DIAGRAM NOTES

Male
Female Contact
Test Point
Tool aided adjustement
All connectors viewed from the outside

UNLESS OTHERWISE SPECIFIED

All resistors chip ± 2 %
All electrolytic capacitors Tantalum chip ± 20 %
All ceramic capacitors chip
from 3.3pF to 1nF ± 10 % COG (± 30 ppm / °C max)
for > 1nF ± 10 % X7R (± 5 % from - 40 to + 85 °C)
if specified "C" → COG ± 10 %
Voltages may vary ± 10 %

MEASURING INSTRUMENT

Digital voltmeter Zin ≥ 10 Mo
AC Voltmeter Zin > 1 Mo (e.g. B & K 2112 or 2606 + 1615 or equivalent)

= LOGICAL "1"
= LOGICAL "0"

A28 2/4
DELETED:
R22-R24-R26

DATE	MODIFICATIONS
10.85	REVISION
10.87	REVISION

KUDELSKI S.A. Dept. NAGRA
CH - 1033 CHESEAUX
Switzerland

NAGRA MAGNETIC RECORDERS INC.
NEW YORK, N.Y. 10036
19 West 44 th Street

A28 2/4 3/4

NAGRA IV-S 3/4 09.06.562.0.00 18. 6 . 84

TIME CODE BACK-UP SWITCHING
POWER REGULATION
OSCILLATOR – TC INPUT

This drawing is confidential and may not be divulged in whole or in part to a third party

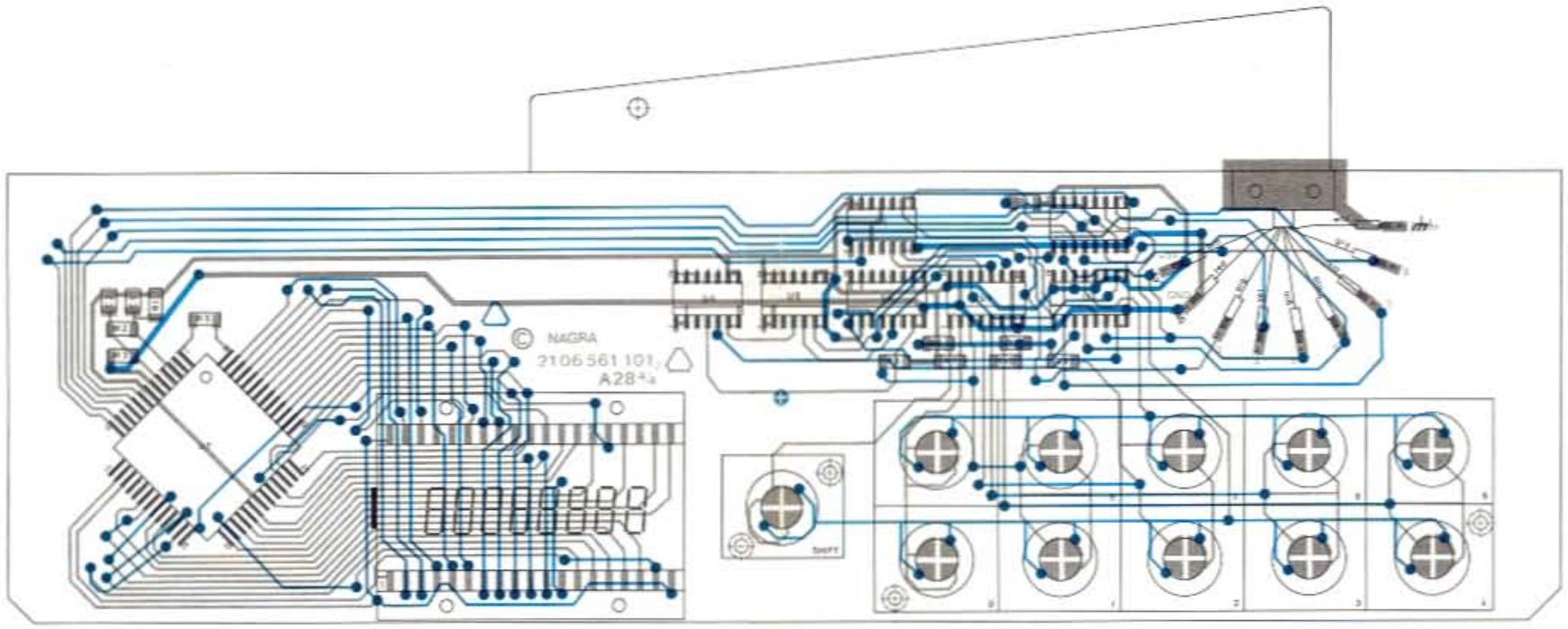

A28 4/4

91 06 561 000

index ⊖

NAGRA IV-S

TIME CODE CPU GENERATOR
KEYBOARD AND DISPLAY

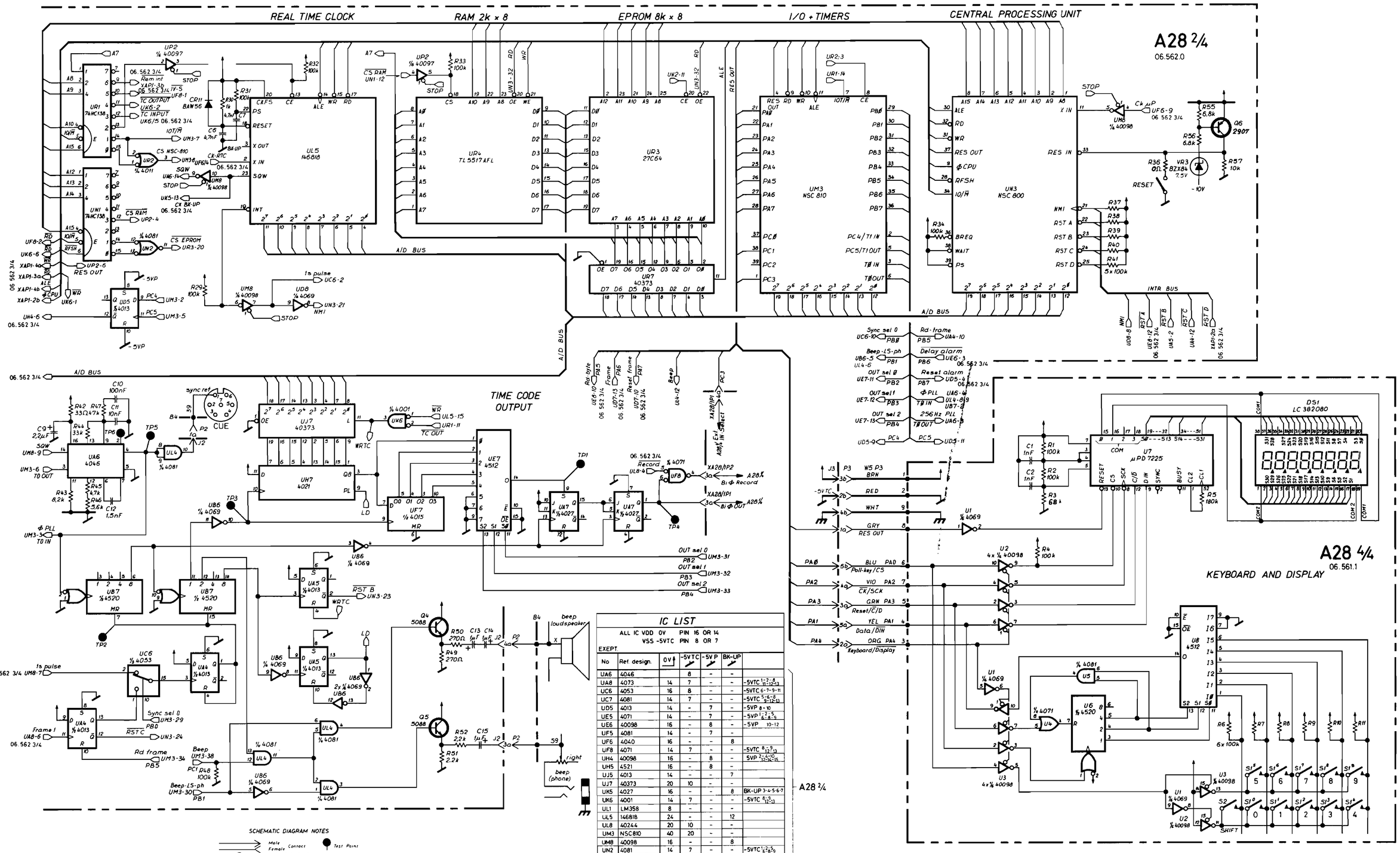

IC LIST

ALL IC VDD 0V PIN 16 OR 14
VSS -5VTC PIN 8 OR 7
EXEPT.

No	Ref. design.	0V	-5VTC	-5VP	BK-UP	
UA6	4046		8	-	-	
UA8	4073	14	7	-	-	-5VTC 1:2-8 11-12-13
UC6	4053	16	8	-	-	-5VTC 6-7-9-11
UC7	4081	14	7	-	-	-5VTC 5-6-8 9-12-13
UD5	4013	14	-	7	-	-5VP 8-10
UE5	4071	14	-	7	-	-5VP 1:2-5 6-8-9
UE6	40098	16	-	8	-	-5VP 10-12
UF5	4081	14	-	7	-	
UF6	4040	16	-	-	8	
UF8	4071	14	7	-	-	-5VTC 8 9 12-13
UH4	40098	16	-	8	-	5VP 2-6-10 12-14-15
UH5	4521	16	-	8	-	
UJ5	4013	14	-	-	7	
UJ7	40373	20	10	-	-	
UK5	4027	16	-	-	8	BK-UP 3-4-5-6-7
UK6	4001	14	7	-	-	-5VTC 8-9 12-13
UL1	LM358	8	-	-	-	
UL5	146818	24	-	-	12	
UL8	40244	20	10	-	-	
UM3	NSC810	40	20	-	-	
UM8	40098	16	-	-	8	
UN2	4081	14	7	-	-	-5VTC 1:2-5 6-8-9
UN3	NSC800	40	20	-	-	
UP2	40097	16	-	-	8	BK-UP 10-12-14 6-15
UR2	4011	14	7	-	-	-5VTC 5-6-8 9-12-13
UR3	27C64	28	14	-	-	0V 1-27
UR4	6116	24	-	-	12	
UR7	40373	20	10	-	-	
U1	4069	14	7	-	-	0V 3-11-13
U2	40098	16	8	-	-	0V 14
U3	40098	16	8	-	-	0V 12
U4	4071	14	7	-	-	0V 8-9-12
U5	4081	14	7	-	-	-5VTC 1-2 0V 8-9-12-13
U6	4520	16	8	-	-	0V 9-10-15
U7	μPD7225	33	6	-	-	-5VTC 1-2

A28 2/4

A28 4/4

= LOGICAL "1"

= LOGICAL "0"

SCHEMATIC DIAGRAM NOTES

Male / Female Contact — Test Points

Tool aided adjustement

All connectors viewed from the outside

UNLESS OTHERWISE SPECIFIED

All resistors chip ± 2 %

All electrolytic capacitors Tantalum chip ± 20 %

All ceramic capacitors chip

from 3.3 pF to 1 nF ± 10 %, C0G (± 30 ppm / °C max)

for > 1 nF ± 10 %, X7R (± 5 %, from - 40 to + 85 °C)

if specified "C" → C0G ± 10 %

Voltages may vary ± 10 %

MEASURING INSTRUMENT

Digital voltmeter Zin ≥ 10 MΩ

AC Voltmeter Zin > 1 MΩ (e.g. B&K 2112 or 2606 + 1615 or equivalent)

A28 2/4
DELETED:
R27-R28-R35
C8

DATE	MODIFICATIONS
10.85	REVISION
10.87	OME 06-018/020

KUDELSKI S.A. Dept. NAGRA
CH-1033 CHESEAUX
Switzerland

NAGRA MAGNETIC RECORDERS INC
NEW YORK, N.Y. 10036
19 West 44 th Street

A28 2/4 4/4

NAGRA IV-S 4/4 09.06.562.0.00 18.6.84

TIME CODE CPU, GENERATOR KEYBOARD AND DISPLAY

This drawing is confidential and may not be divulged in whole or in part to a third party

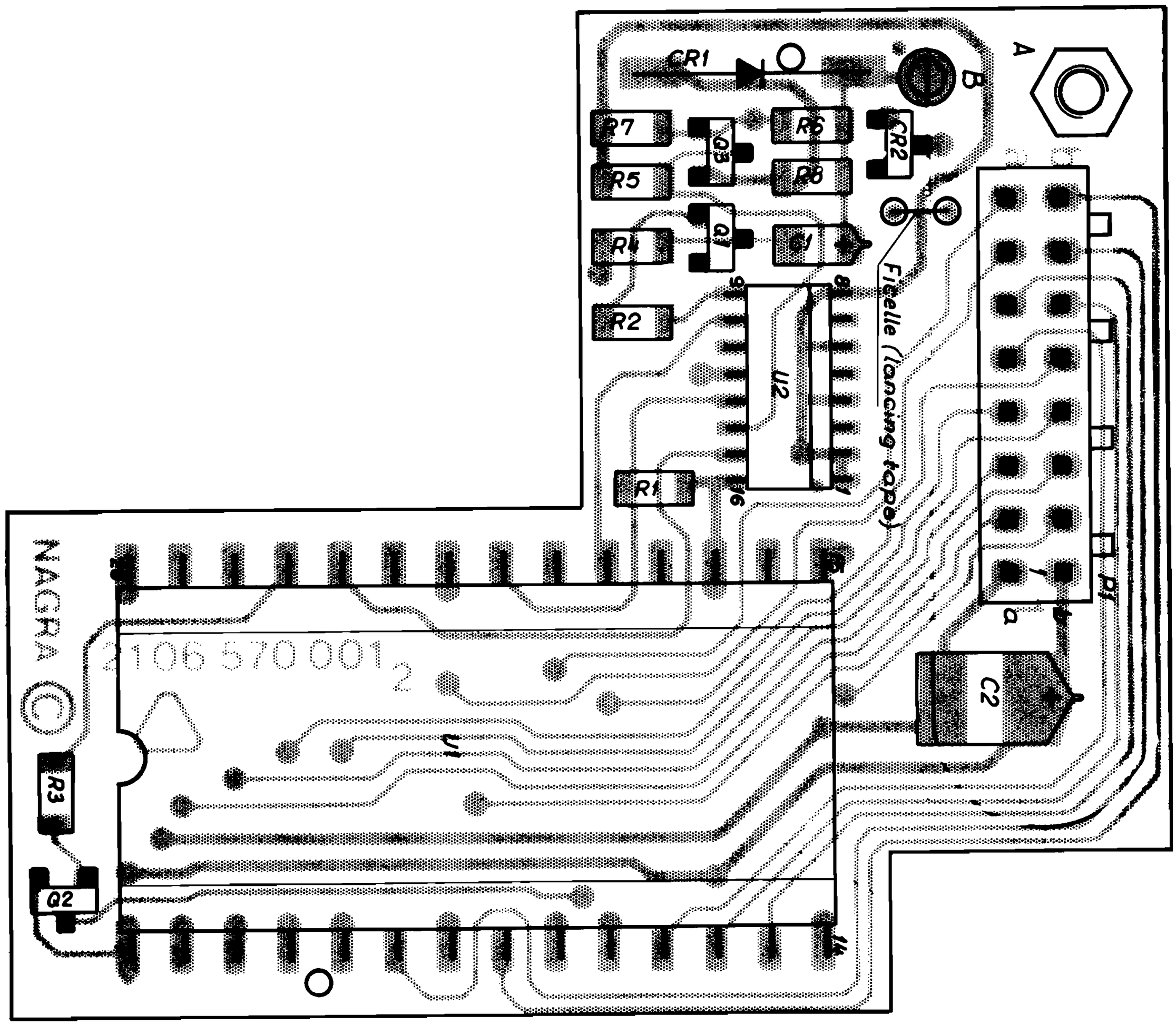

A29

91 06 570 000

index ⊖

QSIA

SERIAL INTERFACE

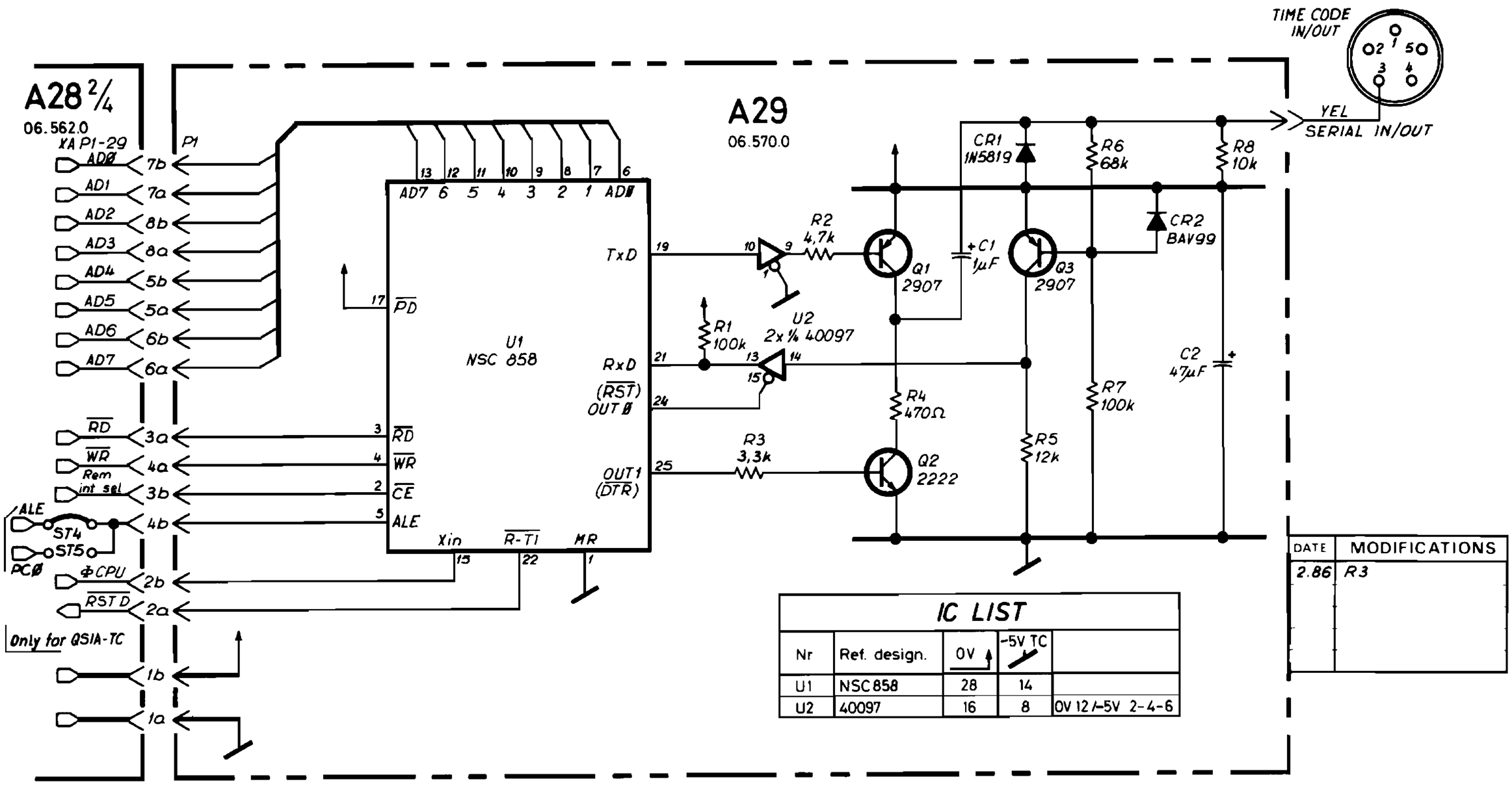

IC LIST				
Nr	Ref. design.	0V	-5V TC	
U1	NSC 858	28	14	
U2	40097	16	8	0V 12 /-5V 2-4-6

DATE	MODIFICATIONS
2.86	R3

SCHEMATIC DIAGRAM NOTES

Male / Female — Contact

All connectors viewed from the outside

UNLESS OTHERWISE SPECIFIED

All resistors chip ± 2 %
All electrolytic capacitors Tantalum chip ± 20 %
All ceramic capacitors chip
from 3,3 pF to 1nF ± 10 % COG (± 30 ppm / °C max)
for > 1nF ± 10 % X7R (± 5 % from - 40 to + 85 °C)
if specified "C" → COG ± 10 %
Voltages may vary ± 10 %

MEASURING INSTRUMENT

Digital voltmeter Zin ≥ 10 MΩ
AC Voltmeter Zin > 1 MΩ (e.g. B & K 2112 or 2606 + 1615 or equivalent)

= LOGICAL "1"
= LOGICAL "0"

KUDELSKI S.A. Dept NAGRA CH 1033 CHESEAUX Switzerland	NAGRA MAGNETIC RECORDERS INC NEW YORK N.Y. 10036 19 West 44 th Street	A29
QSIA-TC	09.06.570.0.00	13.9.85
SERIAL INTERFACE		

This drawing is confidential and may not be divulged in whole or in part to a third party

1.4 INTERCONNECTION

B1	BOX INTERCONNECTION
B2	TAPE DECK INTERCONNECTION
B3	BATTERY BOX INTERCONNECTION (LEFT)
B4	BATTERY BOX INTERCONNECTION (RIGHT)

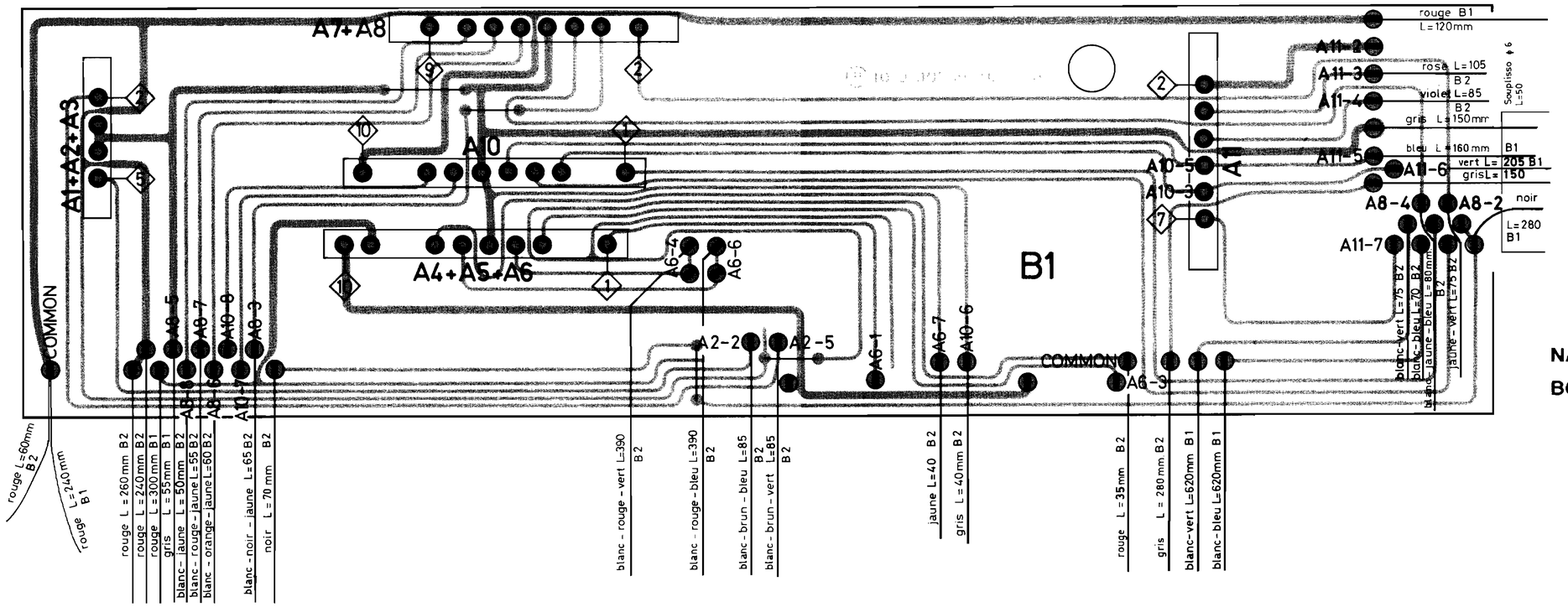

B1

91 06 700 000

index B

NAGRA IV-S

BOX INTERCONNECTION

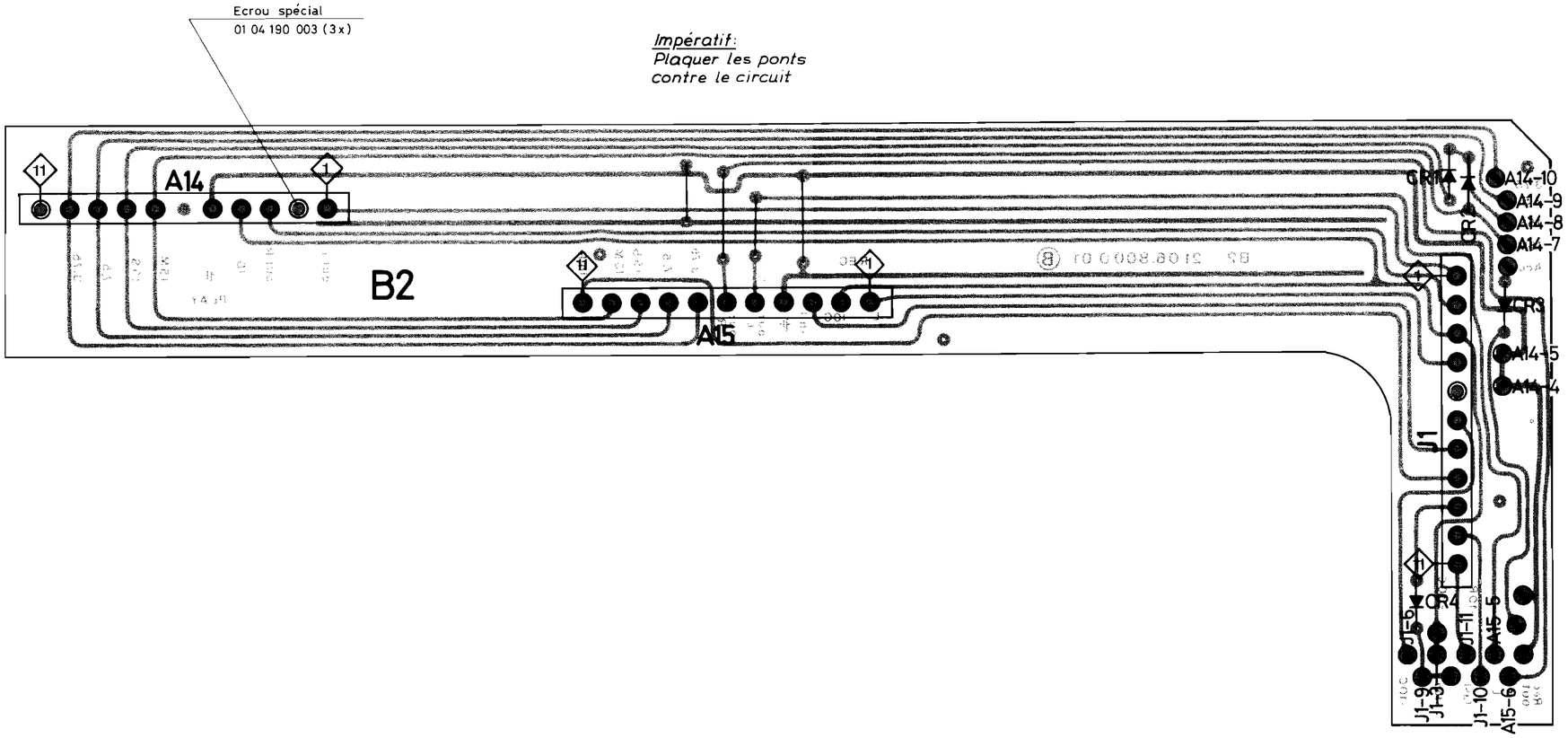

B2

91 06 800 000

index B

NAGRA IV-S

TAPE DECK INTERCONNECTION

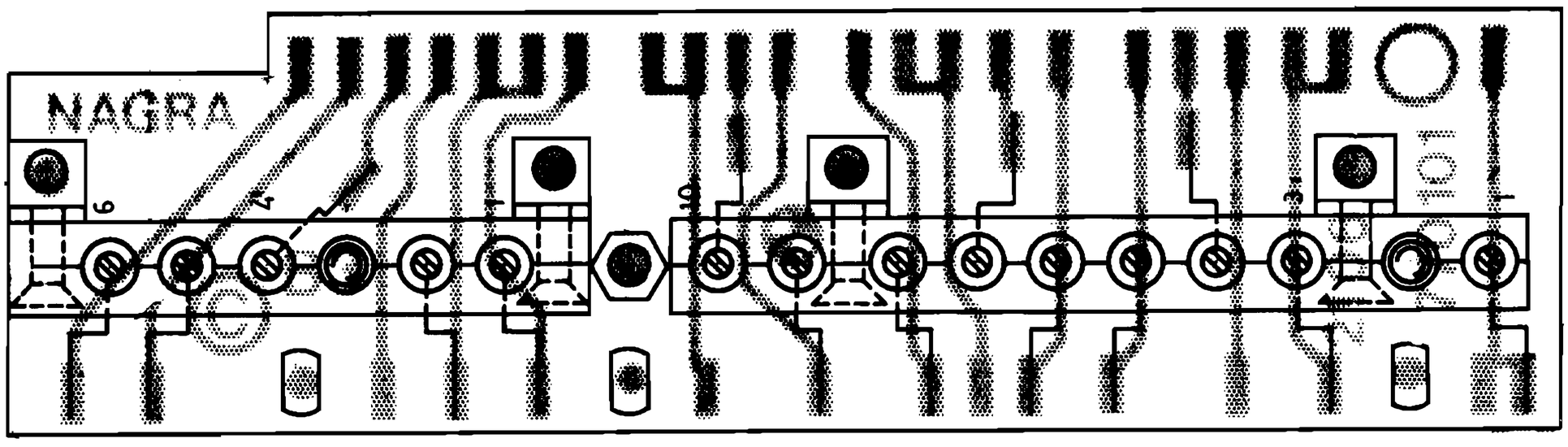

B3 (LEFT)

91 06 770 100

index ⊖

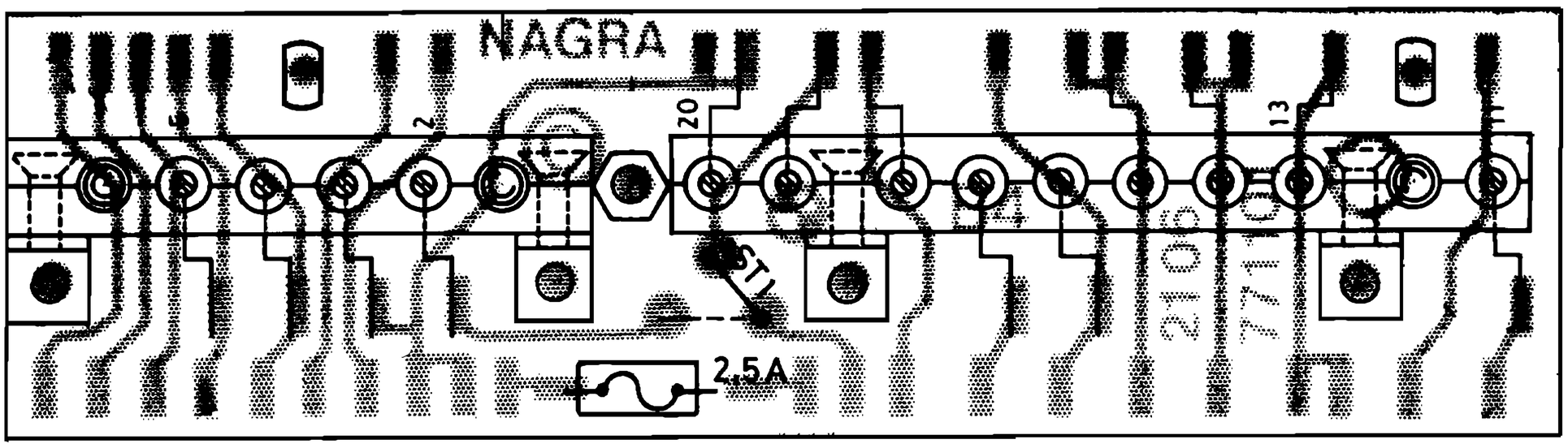

B4 (RIGHT)

91 06 771 100 **NAGRA IV-S**

index ⊖ **BATTERY BOX INTERCONNECTION**

1.5 SYNOPTIC DIAGRAMS

-	IV-S VERSION	91 06 001 000
-	RECORDING CHAIN	91 06 001 000
-	PLAYBACK CHAIN	91 06 001 000
-	3rd TRACK CHAIN	91 06 001 000
-	TIME CODE VERSION	91 06 007 000

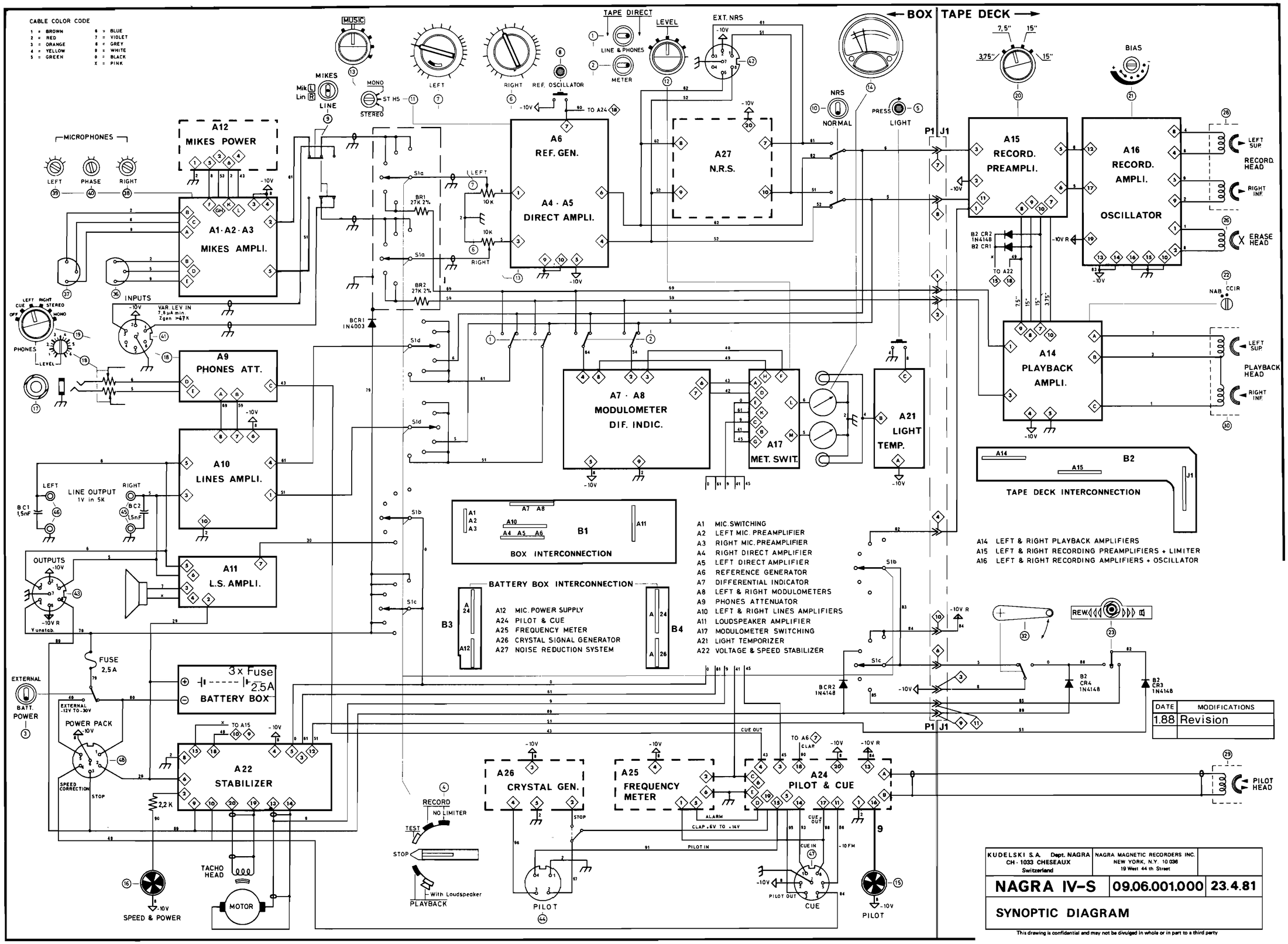
CABLE COLOR CODE
1 = BROWN
2 = RED
3 = ORANGE
4 = YELLOW
5 = GREEN
6 = BLUE
7 = VIOLET
8 = GREY
9 = WHITE
0 = BLACK
X = PINK
BOX
TAPE DECK
MUSIC
MIKES
LINE
MONO
STEREO
LEFT
RIGHT
REF. OSCILLATOR
TAPE DIRECT
LINE & PHONES
METER
LEVEL
EXT. NRS
NRS
NORMAL
PRESS
LIGHT
BIAS
MICROPHONES
PHASE
A12
MIKES POWER
A1 · A2 · A3
MIKES AMPLI.
A6
REF. GEN.
A4 · A5
DIRECT AMPLI.
A27
N.R.S.
A15
RECORD.
PREAMPLI.
A16
RECORD.
AMPLI.
OSCILLATOR
LEFT SUP.
RECORD HEAD
RIGHT INF.
ERASE HEAD
INPUTS
VAR. LEV IN
PHONES
A9
PHONES ATT.
A7 · A8
MODULOMETER
DIF. INDIC.
A17
MET. SWIT.
A21
LIGHT
TEMP.
A14
PLAYBACK
AMPLI.
PLAYBACK HEAD
A10
LINES AMPLI.
LINE OUTPUT
1V in 5K
OUTPUTS
A11
L.S. AMPLI.
B1
BOX INTERCONNECTION
B2
TAPE DECK INTERCONNECTION
A1 MIC. SWITCHING
A2 LEFT MIC. PREAMPLIFIER
A3 RIGHT MIC. PREAMPLIFIER
A4 RIGHT DIRECT AMPLIFIER
A5 LEFT DIRECT AMPLIFIER
A6 REFERENCE GENERATOR
A7 DIFFERENTIAL INDICATOR
A8 LEFT & RIGHT MODULOMETERS
A9 PHONES ATTENUATOR
A10 LEFT & RIGHT LINES AMPLIFIERS
A11 LOUDSPEAKER AMPLIFIER
A17 MODULOMETER SWITCHING
A21 LIGHT TEMPORIZER
A22 VOLTAGE & SPEED STABILIZER
A14 LEFT & RIGHT PLAYBACK AMPLIFIERS
A15 LEFT & RIGHT RECORDING PREAMPLIFIERS + LIMITER
A16 LEFT & RIGHT RECORDING AMPLIFIERS + OSCILLATOR
BATTERY BOX INTERCONNECTION
B3
B4
A12 MIC. POWER SUPPLY
A24 PILOT & CUE
A25 FREQUENCY METER
A26 CRYSTAL SIGNAL GENERATOR
A27 NOISE REDUCTION SYSTEM
FUSE
2,5 A
3 x Fuse
2.5A
BATTERY BOX
EXTERNAL
BATT. POWER
POWER PACK
A22
STABILIZER
A26
CRYSTAL GEN.
A25
FREQUENCY METER
A24
PILOT & CUE
PILOT HEAD
RECORD
NO LIMITER
TEST
STOP
PLAYBACK
With Loudspeaker
TACHO HEAD
MOTOR
SPEED & POWER
PILOT
CUE
REW.
DATE
MODIFICATIONS
1.88
Revision
KUDELSKI S.A. Dept. NAGRA
CH - 1033 CHESEAUX
Switzerland
NAGRA MAGNETIC RECORDERS INC.
NEW YORK, N.Y. 10 036
19 West 44 th Street
NAGRA IV-S
09.06.001.000
23.4.81
SYNOPTIC DIAGRAM
This drawing is confidential and may not be divulged in whole or in part to a third party

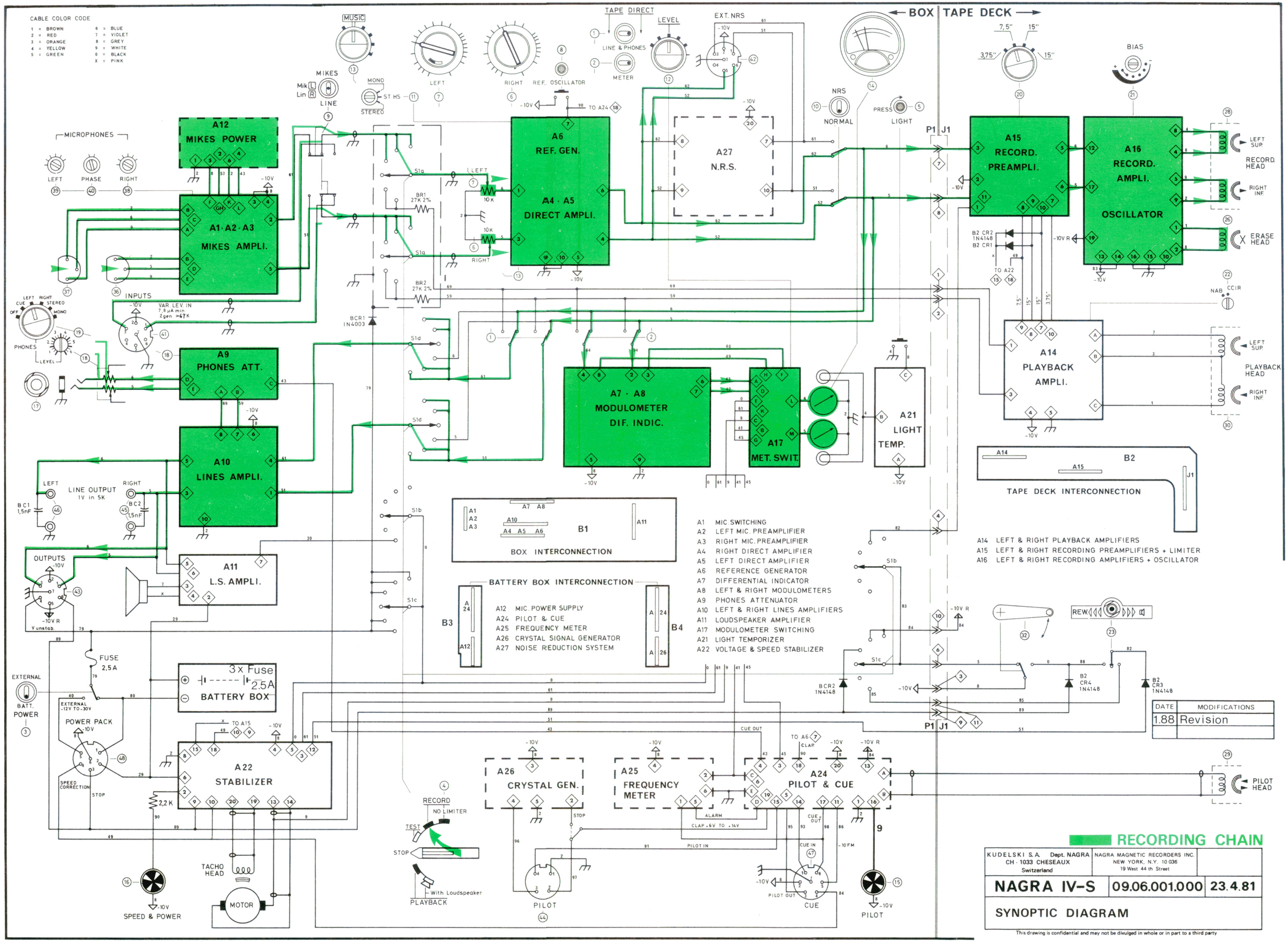

DATE	MODIFICATIONS
1.88	Revision

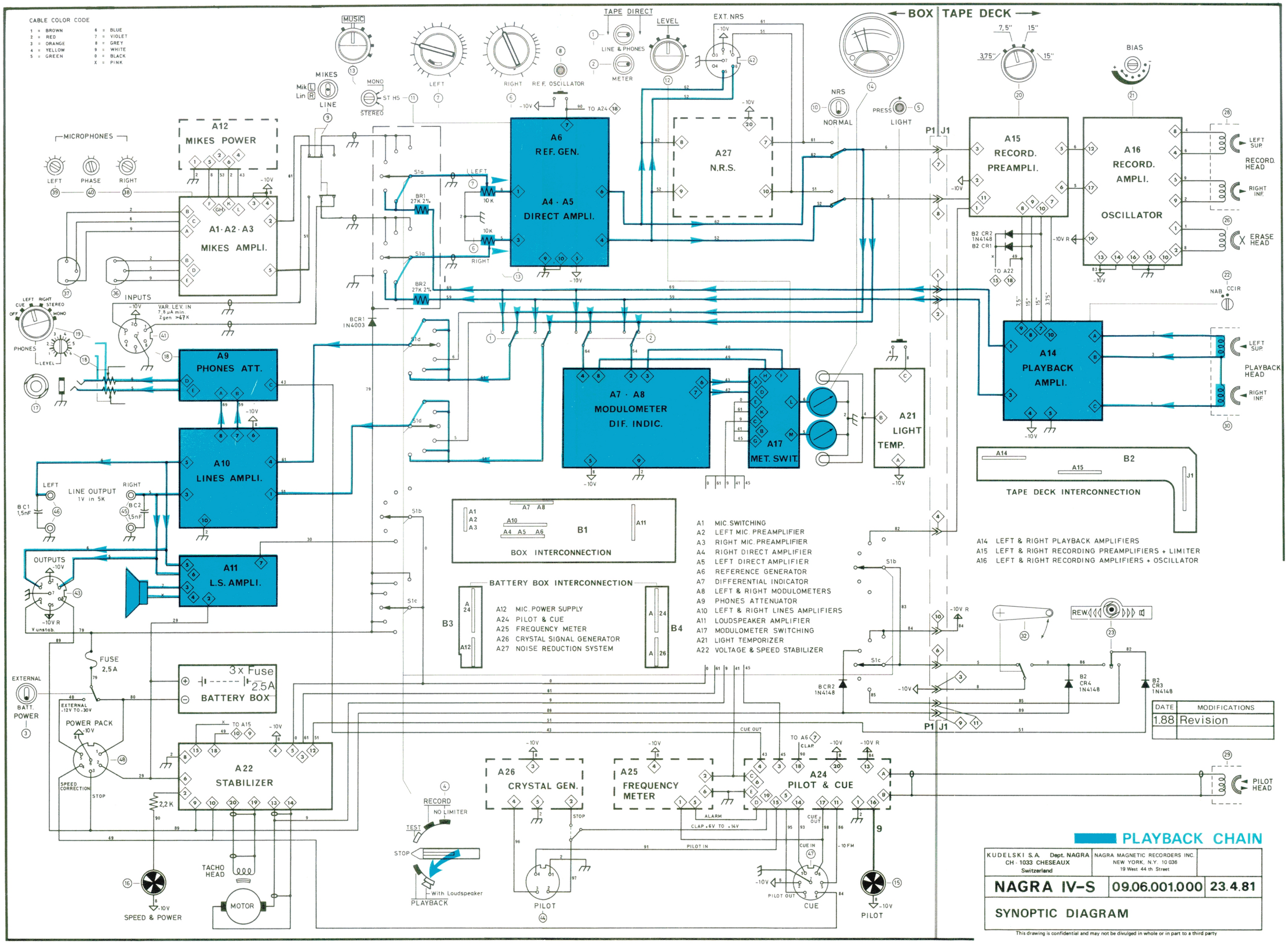
CABLE COLOR CODE
1 = BROWN
2 = RED
3 = ORANGE
4 = YELLOW
5 = GREEN
6 = BLUE
7 = VIOLET
8 = GREY
9 = WHITE
0 = BLACK
X = PINK
BOX
TAPE DECK
MUSIC
MIKES
Mik L
Lin R
LINE
MONO
STEREO
ST HS
LEFT
RIGHT
REF. OSCILLATOR
TAPE DIRECT
LINE & PHONES
METER
LEVEL
EXT. NRS
NRS
NORMAL
PRESS
LIGHT
7,5"
15"
3,75"
BIAS
MICROPHONES
PHASE
A12
MIKES POWER
A1 · A2 · A3
MIKES AMPLI.
A6
REF. GEN.
A4 · A5
DIRECT AMPLI.
A27
N.R.S.
A15
RECORD.
PREAMPLI.
A16
RECORD.
AMPLI.
OSCILLATOR
LEFT SUP.
RECORD HEAD
RIGHT INF.
ERASE HEAD
NAB CCIR
INPUTS
VAR. LEV. IN
7,8 µA min.
Zgen >47 K
PHONES
A9
PHONES ATT.
A10
LINES AMPLI.
A11
L.S. AMPLI.
A7 · A8
MODULOMETER
DIF. INDIC.
A17
MET. SWIT.
A21
LIGHT
TEMP.
A14
PLAYBACK
AMPLI.
PLAYBACK HEAD
LINE OUTPUT
1V in 5K
OUTPUTS
FUSE
2,5 A
3 x Fuse
2,5A
BATTERY BOX
EXTERNAL
BATT. POWER
POWER PACK
A22
STABILIZER
SPEED CORRECTION
STOP
TACHO HEAD
MOTOR
SPEED & POWER
RECORD
NO LIMITER
TEST
STOP
With Loudspeaker
PLAYBACK
A26
CRYSTAL GEN.
PILOT
A25
FREQUENCY METER
A24
PILOT & CUE
CUE
PILOT HEAD
B1
BOX INTERCONNECTION
B2
TAPE DECK INTERCONNECTION
B3
B4
BATTERY BOX INTERCONNECTION
A12 MIC. POWER SUPPLY
A24 PILOT & CUE
A25 FREQUENCY METER
A26 CRYSTAL SIGNAL GENERATOR
A27 NOISE REDUCTION SYSTEM
A1 MIC. SWITCHING
A2 LEFT MIC. PREAMPLIFIER
A3 RIGHT MIC. PREAMPLIFIER
A4 RIGHT DIRECT AMPLIFIER
A5 LEFT DIRECT AMPLIFIER
A6 REFERENCE GENERATOR
A7 DIFFERENTIAL INDICATOR
A8 LEFT & RIGHT MODULOMETERS
A9 PHONES ATTENUATOR
A10 LEFT & RIGHT LINES AMPLIFIERS
A11 LOUDSPEAKER AMPLIFIER
A17 MODULOMETER SWITCHING
A21 LIGHT TEMPORIZER
A22 VOLTAGE & SPEED STABILIZER
A14 LEFT & RIGHT PLAYBACK AMPLIFIERS
A15 LEFT & RIGHT RECORDING PREAMPLIFIERS + LIMITER
A16 LEFT & RIGHT RECORDING AMPLIFIERS + OSCILLATOR
DATE
MODIFICATIONS
1.88
Revision
PLAYBACK CHAIN
KUDELSKI S.A. Dept. NAGRA
CH - 1033 CHESEAUX
Switzerland
NAGRA MAGNETIC RECORDERS INC.
NEW YORK, N.Y. 10036
19 West 44 th Street
NAGRA IV-S
09.06.001.000
23.4.81
SYNOPTIC DIAGRAM
This drawing is confidential and may not be divulged in whole or in part to a third party

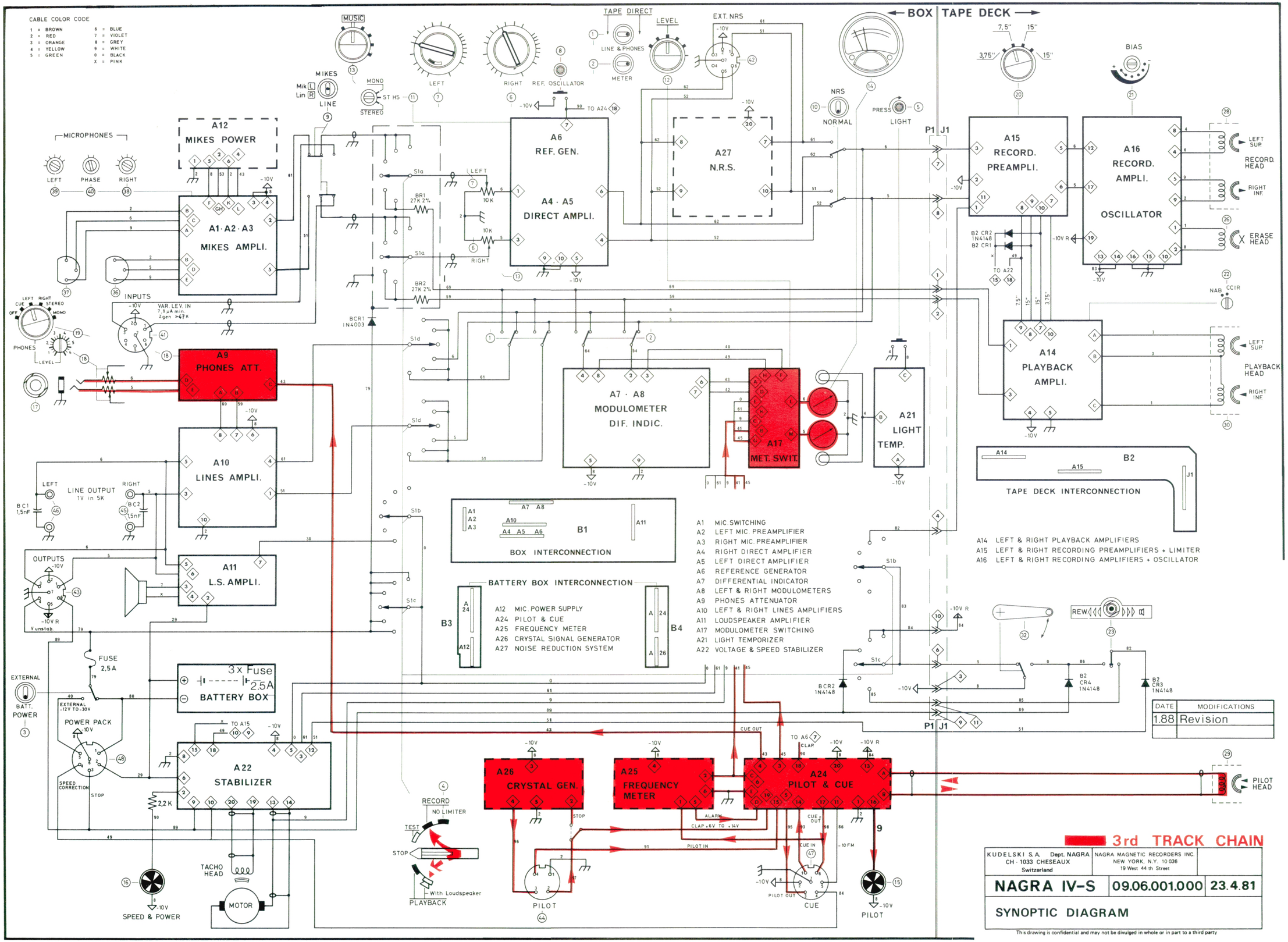
CABLE COLOR CODE
1 = BROWN
2 = RED
3 = ORANGE
4 = YELLOW
5 = GREEN
6 = BLUE
7 = VIOLET
8 = GREY
9 = WHITE
0 = BLACK
X = PINK
BOX
TAPE DECK
MICROPHONES
LEFT
PHASE
RIGHT
A12
MIKES POWER
A1·A2·A3
MIKES AMPLI.
INPUTS
VAR. LEV. IN
7,8 µA min.
Zgen >47K
PHONES
LEVEL
A9
PHONES ATT.
A10
LINES AMPLI.
LINE OUTPUT
1V in 5K
OUTPUTS
A11
L.S. AMPLI.
FUSE
2,5 A
EXTERNAL
BATT. POWER
3x Fuse
2.5A
BATTERY BOX
POWER PACK
SPEED CORRECTION
STOP
A22
STABILIZER
TACHO HEAD
MOTOR
SPEED & POWER
MUSIC
MIKES
LINE
MONO
STEREO
ST HS
LEFT
RIGHT
REF. OSCILLATOR
TAPE DIRECT
LINE & PHONES
METER
LEVEL
EXT. NRS
A6
REF. GEN.
A4 · A5
DIRECT AMPLI.
A27
N.R.S.
NRS
NORMAL
PRESS
LIGHT
BIAS
A15
RECORD.
PREAMPLI.
A16
RECORD.
AMPLI.
OSCILLATOR
LEFT SUP.
RECORD HEAD
RIGHT INF.
ERASE HEAD
NAB
CCIR
A14
PLAYBACK
AMPLI.
PLAYBACK HEAD
A7 · A8
MODULOMETER
DIF. INDIC.
A17
MET. SWIT.
A21
LIGHT
TEMP.
B2
TAPE DECK INTERCONNECTION
B1
BOX INTERCONNECTION
BATTERY BOX INTERCONNECTION
B3
B4
A12 MIC. POWER SUPPLY
A24 PILOT & CUE
A25 FREQUENCY METER
A26 CRYSTAL SIGNAL GENERATOR
A27 NOISE REDUCTION SYSTEM
A1 MIC. SWITCHING
A2 LEFT MIC. PREAMPLIFIER
A3 RIGHT MIC. PREAMPLIFIER
A4 RIGHT DIRECT AMPLIFIER
A5 LEFT DIRECT AMPLIFIER
A6 REFERENCE GENERATOR
A7 DIFFERENTIAL INDICATOR
A8 LEFT & RIGHT MODULOMETERS
A9 PHONES ATTENUATOR
A10 LEFT & RIGHT LINES AMPLIFIERS
A11 LOUDSPEAKER AMPLIFIER
A17 MODULOMETER SWITCHING
A21 LIGHT TEMPORIZER
A22 VOLTAGE & SPEED STABILIZER
A14 LEFT & RIGHT PLAYBACK AMPLIFIERS
A15 LEFT & RIGHT RECORDING PREAMPLIFIERS + LIMITER
A16 LEFT & RIGHT RECORDING AMPLIFIERS + OSCILLATOR
REW.
A26
CRYSTAL GEN.
A25
FREQUENCY
METER
A24
PILOT & CUE
PILOT HEAD
RECORD
NO LIMITER
TEST
STOP
With Loudspeaker
PLAYBACK
PILOT
CUE
PILOT
DATE
MODIFICATIONS
1.88
Revision
3rd TRACK CHAIN
KUDELSKI S.A. Dept. NAGRA
CH - 1033 CHESEAUX
Switzerland
NAGRA MAGNETIC RECORDERS INC.
NEW YORK, N.Y. 10 036
19 West 44 th Street
NAGRA IV-S
09.06.001.000
23.4.81
SYNOPTIC DIAGRAM
This drawing is confidential and may not be divulged in whole or in part to a third party

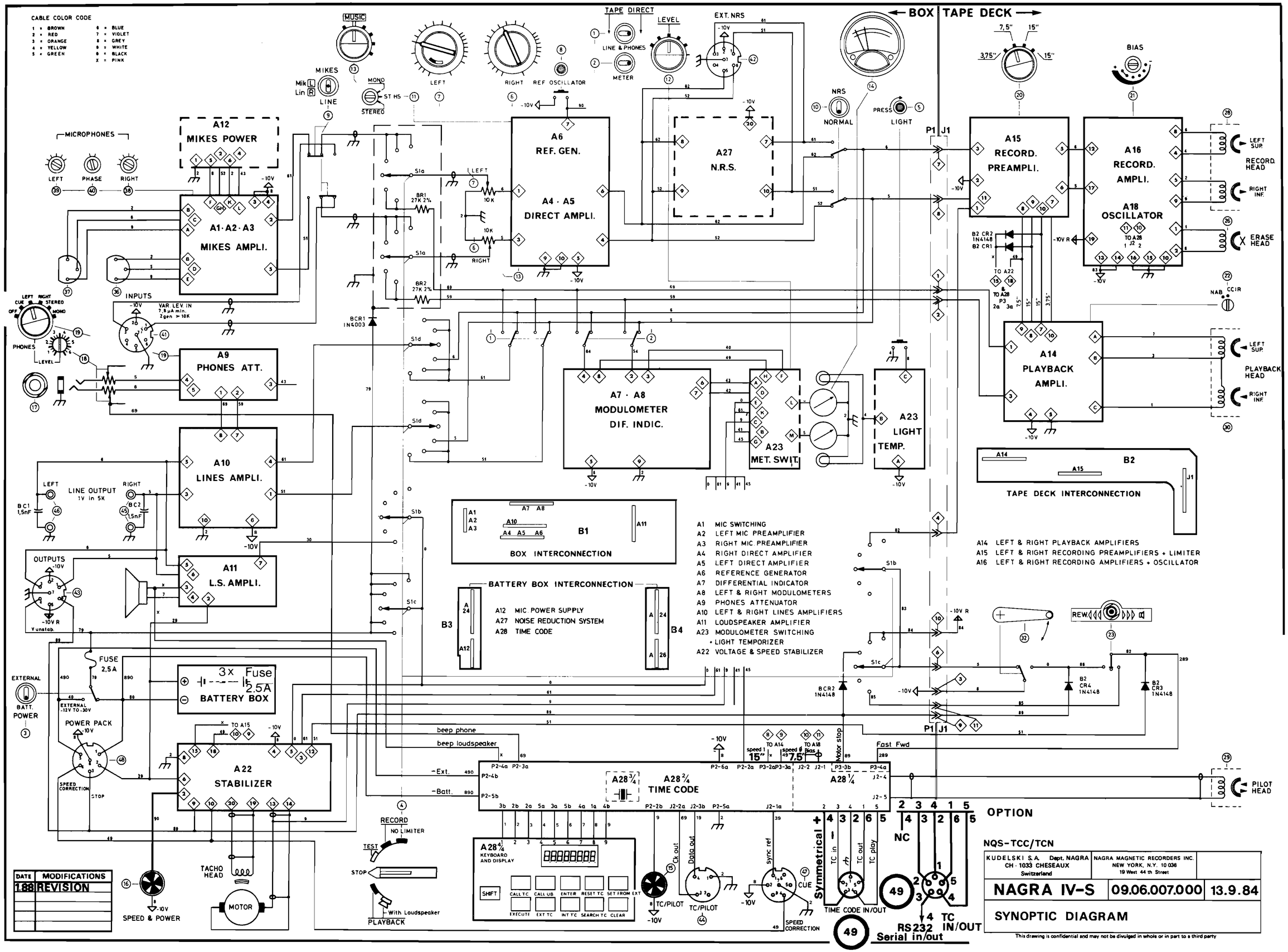
CABLE COLOR CODE
1 = BROWN
2 = RED
3 = ORANGE
4 = YELLOW
5 = GREEN
6 = BLUE
7 = VIOLET
8 = GREY
9 = WHITE
0 = BLACK
X = PINK
BOX
TAPE DECK
MIKES POWER
MIKES AMPLI.
REF. GEN.
DIRECT AMPLI.
N.R.S.
RECORD. PREAMPLI.
RECORD. AMPLI.
OSCILLATOR
PHONES ATT.
LINES AMPLI.
L.S. AMPLI.
MODULOMETER DIF. INDIC.
MET. SWIT.
LIGHT TEMP.
PLAYBACK AMPLI.
TAPE DECK INTERCONNECTION
BOX INTERCONNECTION
BATTERY BOX INTERCONNECTION
A1 MIC SWITCHING
A2 LEFT MIC PREAMPLIFIER
A3 RIGHT MIC PREAMPLIFIER
A4 RIGHT DIRECT AMPLIFIER
A5 LEFT DIRECT AMPLIFIER
A6 REFERENCE GENERATOR
A7 DIFFERENTIAL INDICATOR
A8 LEFT & RIGHT MODULOMETERS
A9 PHONES ATTENUATOR
A10 LEFT & RIGHT LINES AMPLIFIERS
A11 LOUDSPEAKER AMPLIFIER
A23 MODULOMETER SWITCHING + LIGHT TEMPORIZER
A22 VOLTAGE & SPEED STABILIZER
A12 MIC. POWER SUPPLY
A27 NOISE REDUCTION SYSTEM
A28 TIME CODE
A14 LEFT & RIGHT PLAYBACK AMPLIFIERS
A15 LEFT & RIGHT RECORDING PREAMPLIFIERS + LIMITER
A16 LEFT & RIGHT RECORDING AMPLIFIERS + OSCILLATOR
BATTERY BOX
3x Fuse 2.5A
POWER PACK
A22 STABILIZER
A28 3/4 TIME CODE
A28 2/4 TIME CODE
A28 1/4
A28 4/4 KEYBOARD AND DISPLAY
OPTION
NQS-TCC/TCN
KUDELSKI S.A. Dept. NAGRA
CH-1033 CHESEAUX
Switzerland
NAGRA MAGNETIC RECORDERS INC.
NEW YORK, N.Y. 10036
19 West 44 th Street
NAGRA IV-S
09.06.007.000
13.9.84
SYNOPTIC DIAGRAM
This drawing is confidential and may not be divulged in whole or in part to a third party
DATE
MODIFICATIONS
1.88
REVISION

MODIFICATION SHEETS 8